TESLA COLLISION CENTER ENGLEWOOD

#414063

6951 S BLACKHAWK ST, ENGLEWOOD, COLORADO 80112

ABBREVIATIONS

ACOUS. ACOUSTICAL
A.D.A. AMERICANS WITH DISABILITIES ACT
ADJ. ADJUSTABLE
A.F.F. ABOVE FINISHED FLOOR
ALUM. ALUMINUM
ALT. ALTERNATE
APPROX. APPROXIMATE
ARCH. ARCHITECTURAL
B.A.F. BIG ASS FAN
BD. BOARD
BLDG. BUILDING
BLKG. BLOCKING
BOT. BOTTOM
B.O. BOTTOM OF
CAB. CABINET
CLG. CEILING
CL. CLOSET
CLR. CLEAR
COL. COLUMN
CONC. CONCRETE
CONSTR. CONSTRUCTION
CONT. CONTINUOUS
CTR. CENTER
DBL. DOUBLE
DIA. DIAMETER
DIM. DIMENSION
DN. DOWN
DWG. DRAWING
(E) EXISTING
EA. EACH
EL. ELEVATION
EHS. ENVIRONMENTAL, HEALTH & SAFETY
ELEC. ELECTRICAL
EMER. EMERGENCY
EQ. EQUAL
EQUIP. EQUIPMENT
EXT. EXTERIOR
F.A. FIRE ALARM
F.D. FLOAT DIMENSION
F.E.F. FIRE EXTINGUISHER CABINET
FIN. FINISH
F.H.C. FIRE HOSE CABINET
FLR. FLOOR
FLASH. FLASHING
FLOUR. FLUORESCENT
F.O.F. FACE OF FINISH
F.O.M. FACE OF MASONRY
F.O.S. FACE OF STUDS
F.R.T. FIRE RETARDANT TREATED
GA. GAUGE
GC. GENERAL CONTRACTOR
GYP. GYPSUM
H.C. HOLLOW CORE
HDCP. HANDICAP
HDW. HARDWARE
HT. HEIGHT
HORIZ. HORIZONTAL
H.P. HIGH POINT
HPC. HIGH POWER CONNECTOR
HR. HOUR
IN. INCH
INSUL. INSULATION
INT. INTERIOR
IT. INFORMATION TECHNOLOGY
JST. JOIST
JT. JOINT
LAM. LAMINATE
LAV. LAVATORY
LIN. LINEAR
L.L. LANDLORD
L.P. LOW POINT
LT. LIGHT
MAX. MAXIMUM
MDO. MEDIUM DENSITY OVERLAY
MECH. MECHANICAL
MFR. MANUFACTURER
MIN. MINIMUM
MISC. MISCELLANEOUS
M.O. MASONRY OPENING
MTD. MOUNTED
MTL. METAL
(N) NEW
N/A NOT APPLICABLE
N.I.C. NOT IN CONTRACT
NOM. NOMINAL
NO. or # NUMBER
NSO. NEW STORE OPENING
N.T.S. NOT TO SCALE
O OWNER - TESLA PM
O.C. ON CENTER
OPNG. OPENING
OPP. OPPOSITE
P.LAM. PLASTIC LAMINATE
PLYWD. PLYWOOD
PM. PROJECT MANAGER
PR. PAIR
P.T. PRESSURE TREATED
RCP REFLECTED CEILING PLAN
REC. RECESSED
REV. REVISION
REQ'D. REQUIRED
RM. ROOM
R.O. ROUGH OPENING
S.C. SOLID CORE
SCHED. SCHEDULE
SF SQUARE FEET
SIM SIMILAR
SPEC. SPECIFICATION
SR. SERVICE READINESS
S.S. STAINLESS STEEL
S.T.C. SOUND TRANSMISSION COEFFICIENT
STD. STANDARD
STL. STEEL
STOR. STORAGE
STRL. STRUCTURAL
SUSP. SUSPENDED
SYM. SYMMETRICAL
T. TENANT
TEMP. TEMPERED
THK. THICK
T.O. TOP OF
T.O.C. TOP OF CONCRETE
TYP. TYPICAL
U.N. UNLESS OTHERWISE NOTED
U.S. UNDERSIDE
V VENDOR
VERT. VERTICAL
V.I.F. VERIFY IN FIELD
W.C. WATER CLOSET
WD. WOOD
W.R. WATER RESISTANT
W/ WITH

REFERENCE SYMBOLS

	KEYNOTE	ID X'-X" A.F.F.	CEILING TYPE AND HEIGHT
#	COLUMN BUBBLE AND GRID	X##	WALL TYPE
	DATUM POINT	XXX	DOOR NUMBER
	CUT LINE	X XX	FIXTURE / EQUIPMENT TYPE
℄	CENTER LINE SYMBOL	FINISH	FINISH TAG
	ELEVATIONS		PLAN DETAIL
	ELEVATION	ROOM	ROOM NAME
	SECTION		SECTION DETAIL
		ALIGN	ALIGN

CODE / PROJECT INFORMATION

AUTHORITY HAVING JURISDICTION: CITY OF CENTENNIAL

BUILDING CODE: IBC 2021
LOCAL AMENDMENTS:
ELECTRICAL CODE: NEC 2020
PLUMBING CODE: IPC 2021
MECHANICAL CODE: IMC 2021
ENERGY CODE: IECC 2018
FIRE CODE: IFC 2021
ACCESSIBILITY CODE: ICC/A117.1 2010 & TAS 2012

TOTAL BUILDING AREA: 39,750 SF
TOTAL PROPERTY AREA: -
OCCUPANCY GROUP: (S1) STORAGE EXISTING IS: S / B1
CONSTRUCTION TYPE: IIB
OCCUPANCY LOAD: 55
NUMBER OF EXITS REQUIRED: 2
SPRINKLERED: FULLY SPRINKLED - ESFR
IFC 902.2.13.1.2: SMOKE DETECTORS TO BE LOCATED IN RETURN AIR DUCT
SEISMIC ZONE: B
ZONING USE:
BUILDING HAS FULL FIRE ALARM SYSTEM - "FIRE ALARM: YES"

DEFERRED PERMITS

- SIGNAGE
- FIRE SPRINKLER
- FIRE ALARM
- PAINT BOOTH FIRE SPRINKLER

REQUIRED SUBMITTALS

GC TO PROVIDE FOR AOR/EOR REVIEW:

- PAINT BOOTH AND PAINT PREP BOOTHS
- FIRE SPRINKLER / ALARM SHOP DRAWINGS
- HVAC
- SECURITY
- ELECTRICAL
- PLUMBING (FOR ALTERNATES ONLY)
- DOORS / HARDWARE (FOR ALTERNATES ONLY)
- TOILET ACCESSORIES (FOR ALTERNATES ONLY)
- MILLWORK (FOR ALTERNATES ONLY)

EQUIPMENT COUNT

EQUIPMENT	QUANTITY
WALL CONNECTOR - GEN 3	6
14/50	10
FANS	3

VICINITY MAP

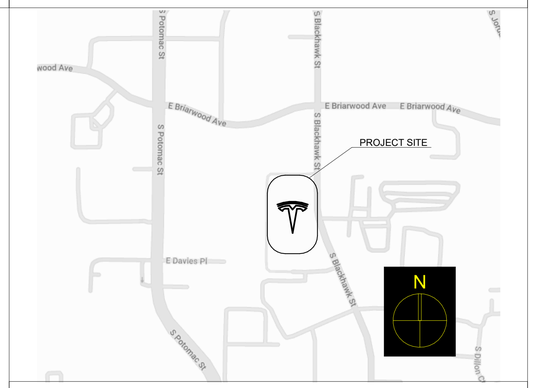

COLLISION CENTER / DESCRIPTION

TESLA, INC. OPERATES AN ELECTRIC AUTOMOBILE COLLISION/ SERVICE CENTER. SERVICING AN ELECTRIC AUTOMOBILE IS DIFFERENT FROM SERVICING A GAS-POWERED CAR. TESLA'S VEHICLES HAVE NO INTERNAL COMBUSTION ENGINE. THIS VEHICLE IS EXCLUSIVELY ELECTRIC AND IS NOT HYBRID. ACCORDINGLY, THERE IS NO EXHAUST SYSTEM, NO FUEL TANKS, NO LIQUID FUEL USAGE, NO NEW OR USED MOTOR OIL, NO NOISE FROM THE VEHICLE, AND NO EMISSIONS LIKE HYDROCARBON AND CARBON MONOXIDE THAT ARE EMITTED FROM AN AUTOMOBILE POWERED BY AN INTERNAL COMBUSTION ENGINE. INSTEAD OF AN ENGINE, AN ELECTRIC MOTOR POWERS TESLA'S VEHICLES. ELECTRIC MOTORS REQUIRE LITTLE TO NO MAINTENANCE.

PROJECT DIRECTORY

TENANT

TESLA, INC.
901 PAGE AVENUE
FREMONT, CA 94538

DHWANI DAVE
ARCHITECTURAL MANAGER
E: dhdave@tesla.com

DJ BETTISCH
PROJECT MANAGER
E: sbettisch@tesla .com

LANDLORD

ENCOMPASS BUSINESS PARK
6951 S. BLACKHAWK ST.
CENTENNIAL, CO 80112
E: Jeremy@centraldevelopment.com
CONTACT: JEREMY RECORDS

STRUCTURAL ENGINEER

WALLA ENGINEERING
6501 AMERICAS PARKWAY NE
STE 301
ALBUQUERQUE, NM 87110
T: 505.881.3008
E: mikew@wallaengineering.com
CONTACT: MIKE WALLA

ARCHITECT OF RECORD

MODULUS ARCHITECTS INC.
8220 SAN PEDRO DR. NE STE 520
ALBUQUERQUE, NM 87113
T: 505.338.1499
E: ctorres@modulusarchitects.com
CONTACT: CARLOS TORRES
SIGNING ARCHITECT: STEPHEN DUNBAR

MEP ENGINEER

ARSED ENGINEERING
4700 LINCOLN RD. NE STE. 101
ALBUQUERQUE, NM 87109
T: 505.761.3100
E: psedillo@arsedengr.com
CONTACT: PAT SEDILLO

THE RESPONSE GROUP INC.
6705 ACADEMY RD. STE. B
ALBUQUERQUE, NM 87109
T: 505.323.7629
E: ryanpomeroy@trg-inc.net
CONTACT: RYAN POMEROY

PROJECT SCOPE / NOTES

39,750 SF TENANT IMPROVEMENT FOR "TESLA, INC." COLLISION CENTER.

ELECTRIC SERVICE UPGRADE NOT REQUIRED.

GAS UPGRADE NOT REQUIRED.

ACCESS CONTROL PERMIT BY G.C.

INDEX OF DRAWINGS

ARCHITECTURAL
A0.00 COVER SHEET
A0.01 GENERAL NOTES & RESPONSIBILITY SCHEDULE
A0.02 ACCESSIBILTY COMPLIANCE DETAILS
A0.03 GENERAL SITE NOTES & ACCESSIBILTY COMPLIANCE DETAILS
A1.01 ARCHITECTURAL SITE PLAN
A1.02 LIFE SAFETY PLAN
A1.03 DEMOLITION FLOOR PLAN
A2.01 CONSTRUCTION & FINISH PLAN
A2.02 FURN. FIXTURE EQUIP. & SIGNAGE PLAN
A2.02a FFE & SIGNAGE LEGEND & NOTES
A3.01 REFLECTED CEILING PLAN
A4.00 ROOF PLAN
A4.01a EXTERIOR ELEVATIONS
A5.00 PARTS & STORAGE SHELVING
A5.03 INTERIOR ELEVATION DETAILS
A6.01 WASHBAY DETAILS
A7.05 SERVICE MOTION MONITOR MOUNTING SECTIONS & DETAILS
A8.01 INTERIOR DETAILS
A8.02 CHARGING EQUIPMENT DETAILS
A8.03 PARTITION DETAILS
A8.04 FLOOR & INTERIOR DETAILS
A9.01 FINISH SCHEDULES
A9.02 DOOR, HARDWARE & WINDOW SCHEDULES
A9.03 OVERHEAD DOOR - REFERENCE DETAILS
A10.01 ARCHITECTURAL SPECIFICATIONS
A10.02 ARCHITECTURAL SPECIFICATIONS
A10.03 ARCHITECTURAL SPECIFICATIONS
A10.05 ARCHITECTURAL SPECIFICATIONS

PAINT BOOTH
A-0 COVER SHEET AND SITE PLAN
M-1.1 GENERAL NOTES
M-1.2 MECHANICAL PLAN - LEVEL 1
M-1.3 MECHANICAL PLAN - ROOF
M-1.4 MECHANICAL PLAN - PIT
M-1.5 EQUIPMENT WEIGHT PLAN
M-2.1 GENERIC PIT DETAILS
M-2.2 MECHANICAL DUCTWORK DETAILS
M-2.3 ANCHORING PLAN - PAINT AND MIXING BOOTH
M-2.4 ANCHORING PLAN - LIMITED FINISHING WORKSTATION
M-2.5 CONCRETE ANCHORING DETAILS AND CONSTRUCTION
M-3.1 VIEWS AND ISOMETRIC - PAINT BOOTH
M-3.2 VIEWS AND ISOMETRIC - LIMITED FINISHING WORKSTATION
M-3.3 VIEWS AND ISOMETRIC - MIXING ROOM
M-4.1 GENERIC PAINT BOOTH ASSEMBLY DETAILS
M-4.2 PAINT BOOTH ELECTRICAL DETAILS
M-4.3 GAS SPECIFICATIONS AND FAN DETAIL
M-4.4 BURNER DETAIL
M-4.5 CONTROL SYSTEM DETAIL
M-4.6 SAFETY DEVICES
M-4.7 FIRE SUPPRESION DETAIL
M-4.8 FIRE SPRINKLER LOCATIONS
M-5.1 INTERTEK LISTING - PAINT BOOTH
M-5.2 INTERTEK LISTING - LIMITED FINISHING WORKSTATION
M-5.3 INTERTEK LISTING - MIXING BOOTH

STRUCTURAL
S0 GENERAL STRUCTURAL NOTES
S1 FOUNDATION - SLAB PLAN
S01 SPECIAL INSPECTIONS
S20 FOUNDATION SECTIONS & DETAILS

ELECTRICAL
E0.00 ELECTRICAL LEGEND
E0.01 ELECTRICAL GENERAL NOTES
E1.00 ELECTRICAL SITE PLAN
E2.00 ELECTRICAL LIGHTING PLAN
E2.01 ELECTRICAL LIGHTING SCHEDULES
E2.02 ELECTRICAL LIGHTING DETAILS
E3.00 ELECTRICAL POWER PLAN
E3.01 ENLARGED ELECTRICAL POWER PLAN - PAINT BOOTH AREA
E3.02 ELECTRICAL ROOF PLAN
E3.03 ELECTRICAL POWER DETAILS
E4.00 POWER RISER DIAGRAM
E4.01 ELECTRICAL PANEL SCHEDULES
E4.02 ELECTRICAL PANEL SCHEDULES
E4.03 ELECTRICAL PANEL SCHEDULES
E5.00 ELECTRICAL SPECIFICATIONS
E5.01 ELECTRICAL SPECIFICATIONS
E5.02 ELECTRICAL SPECIFICATIONS
E6.00 ELECTRICAL LOW VOLTAGE/DATA PLAN
E6.01 ELECTRICAL ENLARGED LOW VOLTAGE/DATA PLAN - PAINT BOOTH AREA
E7.00 ENERGY CODE COMPLIANCE

MECHANICAL
M0.00 MECHANICAL SPECIFICATIONS
M0.30 MECHANICAL COMPLIANCE
M1.00 MECHANICAL SCHEDULES
M1.10 MECHANICAL HVAC PLAN
M3.00 MECHANICAL DETAILS

PLUMBING
P0.00 PLUMBING SPECIFICATIONS
P1.00 PLUMBING WASTE AND VENT FLOOR PLAN
P1.20 PLUMBING PIPING FLOOR PLAN
P3.00 PLUMBING DETAILS

MODULUS ARCHITECTS & LAND USE PLANNING
8220 SAN PEDRO DR NE SUITE 520
ALBUQUERQUE, NEW MEXICO 87113
PHONE (505) 338-1499
FAX (505) 338-1498

STATE OF COLORADO
Stephen Aaron Dunbar
405806
LICENSED ARCHITECT

PROJECT TITLE

TESLA COLLISION CENTER

6951 S. BLACKHAWK ST, ENGLEWOOD, COLORADO 80112

PROJECT MANAGER

DRAWN BY:

ISSUE / REVISION

ISSUE DATE: 02-12-24
SHEET TITLE

COVER SHEET

AS NOTED

SCALE:
JOB NO. 414063

SHEET NUMBER

A0.00

CONSTRUCTION DOCUMENTS

COPYRIGHT 2021 MODULUS ARCHITECTS
C:\Users\ctorres.MODULUSARCHITEC\Documents\414063-NA-US-CO-ENGLEWOOD-TESLA-COLLISION CENTER_ctorresZXELP.rvt
2/14/2024 4:16:30 PM
TESLA COLLISION CENTER

1. ALL WORK SHALL COMPLY WITH THE APPLICABLE CODES, AMENDMENTS, RULES, REGULATIONS, ORDINANCES, LAWS, ORDERS, APPROVALS, ETC. THAT ARE REQUIRED BY PUBLIC AUTHORITIES. IN THE EVENT OF CONFLICT, THE MOST STRINGENT REQUIREMENTS SHALL COMPLY. REQUIREMENTS INCLUDE, BUT ARE NOT LIMITED TO THE CURRENT APPLICABLE EDITIONS OF PUBLICATIONS.

2. THIS SET OF DOCUMENTS IS NOT ALL INCLUSIVE AND IS MEANT TO ONLY SHOW THE INTENT OF THE SCOPE OF WORK. THE CONTRACTOR SHALL BID ALL WORK INVOLVED WITH A NORMALLY ANTICIPATED SCOPE OF WORK.

3. ALL SYMBOLS AND ABBREVIATIONS USED ON THE DRAWINGS ARE CONSIDERED TO BE CONSTRUCTION STANDARDS. IF THE CONTRACTOR HAS QUESTIONS REGARDING SYMBOLS & ABBREVIATIONS USED, OR THEIR EXACT MEANING, THE ARCHITECT SHALL BE NOTIFIED FOR CLARIFICATION.

   A. 'TYP.' MEANS THAT THE NOTE IS REPRESENTATIVE OF A REPEATED CONDITION. UNLESS OTHERWISE NOTED, DETAILS ARE USUALLY KEYED AND NOTED 'TYP.' ONLY ONCE.
   B. 'SIM.' MEANS THAT THE NOTE IS REPRESENTATIVE OF A SIMILAR CONDITION. UNLESS OTHERWISE NOTED, DETAILS ARE USUALLY KEYED AND NOTED 'SIM.' WHEN THEY HAVE SMALL VARIATIONS FROM THE REFERENCED NOTE.

4. CONTRACTORS AND SUBCONTRACTORS SHALL VISIT THE JOB SITE AND BECOME FAMILIAR WITH EXISTING CONDITIONS, REVIEW ALL DOCUMENTS, VERIFY ALL DIMENSIONS AND FIELD CONDITIONS, AND CONFIRM THAT WORK IS BUILDABLE AS SHOWN PRIOR TO SUBMITTING A BID PROPOSAL. ANY CONFLICTS OR OMISSIONS, ETC., SHALL BE IMMEDIATELY REPORTED TO THE TESLA PROJECT MANAGER & THE ARCHITECT PRIOR TO THE PERFORMANCE OF ANY WORK.

5. GENERAL CONTRACTOR IS RESPONSIBLE FOR PAYING FOR AND PROCURING ALL BUILDING PERMITS, INCLUDING SUBCONTRACTORS, HVAC, ELECTRICAL, PLUMBING, ETC., AND ALL LICENSING FEES THAT MAY BE REQUIRED BY THE LOCAL JURISDICTION.

6. GENERAL CONTRACTOR SHALL PERSONALLY SUPERVISE AND DIRECT ALL WORK. GENERAL CONTRACTOR IS RESPONSIBLE FOR ALL CONSTRUCTION AND INSTALLATION METHODS, TECHNIQUES, SEQUENCES, PROCEDURES AND FOR COORDINATION OF ALL REQUIRED WORK.

7. DO NOT SCALE DRAWINGS. WRITTEN DIMENSIONS TAKE PRECEDENCE OVER SCALED DIMENSIONS. THE CONTRACTOR SHALL ALERT THE TESLA PROJECT MANAGER AND THE ARCHITECT OF ANY GROSS INCONSISTENCIES BETWEEN SCALED DIMENSIONS AND WRITTEN DIMENSIONS.

8. ARCHITECTURAL DRAWINGS TAKE PRECEDENCE OVER OTHER DRAWINGS FOR LAYOUT DIMENSIONS AND NUMBER OF ITEMS PROVIDED. UPON DISCOVERY OF DISCREPANCIES BETWEEN ARCHITECTURAL DRAWINGS AND OTHER DRAWINGS, THE GENERAL CONTRACTOR SHALL NOTIFY THE ARCHITECT AND TESLA PROJECT MANAGER IMMEDIATELY.

9. DIMENSIONS ARE SHOWN FROM THE FINISHED FACE OF FINISH, UNLESS OTHERWISE NOTED. VERTICAL DIMENSIONS ARE FROM THE TOP OF FLOOR FINISH ESTABLISHED BY THE CONTRACTOR, SUBJECT TO THE APPROVAL OF THE TESLA PROJECT MANAGER OR ARCHITECT, UNLESS OTHERWISE NOTED. DIMENSIONS ARE NOT ADJUSTABLE WITHOUT THE APPROVAL OF THE TESLA PROJECT MANAGER OR THE ARCHITECT UNLESS NOTED.

10. DO NOT SUBSTITUTE, REVISE, OR CHANGE THE WORK WITHOUT THE WRITTEN CONSENT OF THE TESLA PROJECT MANAGER.

11. ALL MANUFACTURED ARTICLES, MATERIALS AND EQUIPMENT SHALL BE CONDITIONED, USED APPLIED, INSTALLED, CONNECTED, ERECTED, AND CLEANED IN ACCORDANCE WITH THE MANUFACTURER'S WRITTEN SPECIFICATIONS OR INSTRUCTIONS.

12. THE ARCHITECT HAS NO KNOWLEDGE OF AND SHALL NOT BE HELD LIABLE IF ANY ASBESTOS OR OTHER HAZARDOUS MATERIALS ARE DISCOVERED DURING CONSTRUCTION. THE CONTRACTOR SHALL ISOLATE THE AFFECTED AREA AND CONTACT THE TESLA PROJECT MANAGER FOR FURTHER INSTRUCTIONS BEFORE PROCEEDING.

13. COORDINATE ALL WORK WITH THE LANDLORD'S REPRESENTATIVE AS REQUIRED INCLUDING COMPLIANCE WITH "WORKING RULES", LOCAL NOISE ORDINANCES, THE USE OF ELEVATORS, TEMPORARY STORAGE, LOADING DOCKS, BUILDING KEYING SYSTEMS, ETC.

14. PROVIDE NECESSARY BARRICADES, DUST PROOF BARRICADES LIGHTING, SIGNAGE, AND GUARDRAILS AS REQUIRED BY OWNER AND / OR APPLICABLE REGULATORY ADVISORY FOR THE PROTECTION OF BUILDING OCCUPANTS, WORKERS AND PEDESTRIANS.

15. DO NOT BLOCK REQUIRED EXIT WAYS. ERECT BARRICADES AND PROVIDE TEMPORARY LIGHTING IF REQUIRED TO MAINTAIN EGRESS PATH OF TRAVEL. DO NOT ALLOW DEMOLISHED MATERIAL TO COLLECT AND CREATE A HAZARD. REMOVE FROM SITE ON A REGULAR BASIS; DAILY IF REQUIRED.

16. COORDINATE WITH THE TESLA PROJECT MANAGER AND THE LANDLORD BEFORE BEGINNING ANY WORK THAT COULD AFFECT THE BUILDINGS FIRE ALARM, SMOKE EVACUATION OR FIRE SPRINKLER SYSTEM(S).

17. DURING ALL PHASES OF WORK, DO NOT DISTURB THE DELIVERIES AND FUNCTIONS OF ADJACENT AND NEIGHBORING TENANTS AND PROPERTY OWNERS.

18. GENERAL CONTRACTOR SHALL, IN THE WORK OF ALL TRADES, PERFORM ANY AND ALL CUTTING, PATCHING, RESTORING, REPAIRING, ECT. NECESSARY TO COMPLETE THE WORK AND RESTORE ANY DAMAGED OR REMOVED SURFACES AND FIREPROOFING TO "LIKE NEW" CONDITION.

19. EXISTING FINISHES TO REMAIN UNLESS OTHERWISE INDICATED ON PLAN OR SCHEDULE. REPLACE DAMAGED FINISHES. GENERAL CONTRACTOR SHALL BRING ALL FINISHES TO "LIKE NEW" CONDITION.

20. GENERAL CONTRACTOR SHALL VERIFY ANY ROOF WARRANTIES WITH LANDLORD AND INCLUDE IN CONTRACT.

21. DO NOT CORE DRILL, SLEEVE OR CUT STEEL MEMBERS OR ALTER ANY EXISTING BUILDING FRAMING MEMBER WITHOUT LANDLORD APPROVAL. X-RAYS AND/OR STRUCTURAL ANALYSIS AND DESIGN IS REQUIRED AT CONTRACTORS COST. COORDINATE WITH TESLA PROJECT MANAGER PRIOR TO BEGINNING WORK.

22. EACH CONTRACTOR SHALL LEAVE THE SITE IN A NEAT, CLEAN AND ORDERLY CONDITION UPON THE COMPLETION OF HIS WORK ON A DAILY BASIS. ALL WASTE, RUBBISH AND EXCESS MATERIALS SHALL BE REMOVED FROM THE SITE PROMPTLY. THE GENERAL CONTRACTOR SHALL BE RESPONSIBLE FOR REMOVAL AND DISPOSAL OF ALL TRASH, INCLUDING OWNER-FURNISHED ITEMS AND TRASH GENERATED BY OWNER'S CONTRACTORS FOR THE DURATION OF THE PROJECT.

23. CONTRACTOR TO PROVIDE A PORTABLE FIRE EXTINGUISHER WITH A RATING OF NOT LESS THAN 2-A OR 2-A/10BC WITHIN 75' TRAVEL DISTANCE TO ALL PORTIONS OF THE BUILDING DURING CONSTRUCTION OR AS REQUIRED BY LOCAL JURISDICTION IF MORE STRINGENT.

24. ALL FINISHED WORK SHALL BE WELL ANCHORED, FIRM, IN TRUE ALIGNMENT, PLUMB AND LEVEL, WITH A SMOOTH, CLEAN AND UNIFORM APPEARANCE WITHOUT WAVES, DISTORTIONS, HOLES, MARKS, CRACKS, STAINS, OR DISCOLORATION. JOINTING SHALL BE TIGHT FITTING, NEAT AND WELL SCRIBED. THE FINISH WORK SHALL NOT HAVE EXPOSED UNSIGHTLY ANCHORS OR FASTENERS AND SHALL NOT PRESENT HAZARDOUS, UNSAFE CORNERS. ALL WORK SHALL HAVE THE PROVISION FOR EXPANSION, CONTRACTION AND SHRINKAGE AS NECESSARY TO PREVENT CRACKS, BUCKLING AND WARPING DUE TO TEMPERATURE AND HUMIDITY CONDITIONS.

25. ATTACHMENTS, CONNECTIONS AND FASTENINGS OF ANY NATURE ARE TO BE PROPERLY AND PERMANENTLY SECURED IN CONFORMANCE WITH BEST PRACTICES. THE CONTRACTOR IS RESPONSIBLE FOR INSTALLING THEM ACCORDING PER THE ABOVE REQUIREMENTS. THE DRAWINGS SHOW ONLY SPECIAL CONDITIONS TO ASSIST THE CONTRACTOR, THEY DO NOT ILLUSTRATE EVERY CONDITION AND DETAIL.

26. WHEN CONTRACTOR ACCEPTS DELIVERY OF ALL ITEMS NOTED ON PLANS WHETHER IN CONTRACT OR NOT IN CONTRACT, HE SHALL BE RESPONSIBLE FOR LOSS AND /OR DAMAGE TO THESE ITEMS.

27. SERVICE AREA EQUIPMENT INSTALLATION & ALL RELATED INSTALLATION REQUIREMENTS ARE THE EXCLUSIVE RESPONSIBILITY OF THE EQUIPMENT SUPPLIER / INSTALLER. EQUIPMENT SUPPLIER RESPONSIBLE FOR BECOME FAMILIAR WITH SITE CONDITIONS PRIOR TO INSTALL AND SHALL PROVIDE INSTALL INSTRUCTION, DETAILS & SUPPORT ACCORDINGLY. SERVICE AREA EQUIPMENT LOCATIONS AS SHOWN IN THESE DRAWINGS ARE FOR REFERENCE ONLY.

28. NOTHING IS PERMITTED TO BE ATTACHED TO, SUSPENDED FROM, OR PENETRATE THE ROOF DECK ABOVE. FRAME, BRACE, AND / OR SUSPEND AS NEEDED FROM THE TOP CHORD OF JOISTS OR STRUCTURAL STEEL WHICH EXISTS ABOVE SPACE.

29. GENERAL CONTRACTOR TO ENSURE WALL TO FLOOR TRANSITION IS STRAIGHT, TRUE, & READY TO RECEIVE BASE AS SCHEDULED. ALL LIGHT GAUGE METAL WALL STUDS SHALL BE 20 GA. MIN. USE GYP. BOARD IN ALL LOCATIONS U.O.N. AND GREEN GYP. BD. ADJACENT TO PLUMBING FIXTURES.

30. COORDINATE AND PROVIDE APPROPRIATE STRUCTURAL BLOCKING AND REINFORCING IN PARTITIONS BEHIND ALL WALL MOUNTED ITEMS, INCLUDING WALL HUNG OWNER PROVIDED ITEMS OR FURNITURE N.I.C. COORDINATE WITH TESLA PROJECT MANAGER AND PLANS.

31. ANY / ALL NEW OR EXISTING PENETRATIONS THROUGH FIRE RESISTIVE FLOORS, WALLS OR SHAFT WALLS SHALL BE PROTECTED BY MATERIALS AND INSTALLATION METHODS THAT CONFORM TO U.L. STANDARDS FOR A FIRE RATED SYSTEM. THE GENERAL CONTRACTOR SHALL SUBMIT SHOP DRAWING DETAILS WHICH SHOW COMPLETE CONFORMANCE TO THE U.L. LISTING TO THE ARCHITECT.

32. GENERAL CONTRACTOR SHALL SEAL AROUND ALL PENETRATION, DUCTS, PIPES, CONDUITS, ETC., AT ALL FIRE-RATED WALLS AND CEILING CONSTRUCTION. THE SEALANT SHALL NOT DIMINISH RATING OF SUCH WALLS OR CEILING. THE G.C. SHALL DAM ALL VOIDS AND GAPS AND FILL IN WITH U.L. APPROVED FIRE-RATED SEALANT OR PUTTY COMPOUND AS PER MANUFACTURER'S RECOMMENDATIONS.

33. THE ARCHITECT HAS NO KNOWLEDGE OF AND SHALL NOT BE LIABLE FOR ANY DAMAGES CAUSED BY THE EXISTING WATER LEAKAGES AND MOLDS.

34. COMPLY WITH APPLICABLE LOCAL, STATE AND FEDERAL CODES AND REGULATIONS PERTAINING TO SAFETY OF PERSONS, PROPERTY AND ENVIRONMENTAL PROTECTION. PERFORM ALL WORK IN ACCORDANCE WITH ALL APPLICABLE AUTHORITIES HAVING JURISDICTION AND ALL CONDITIONS SET FORTH IN THE LEASE.

35. COORDINATE DEMOLITION WORK WITH MECHANICAL, PLUMBING AND ELECTRICAL DRAWINGS.

36. CONTRACTOR TO VERIFY FIELD CONDITIONS, AND NOTIFY TESLA PROJECT MANAGER AND ARCHITECT OF ALL DISCREPANCIES BEFORE PROCEEDING WITH WORK.

37. REMOVE ALL ELECTRICAL AND MECHANICAL LINES THAT ARE NOT SPECIFICALLY INTENDED TO REMAIN. REFER TO ELECTRICAL AND MECHANICAL PLANS FOR INFORMATION ON EXISTING ELECTRICAL AND MECHANICAL EQUIPMENT TO REMAIN FOR RE-USE. ALL UNUSED ELECTRICAL WIRING SHALL BE PULLED BACK TO THE MAIN SWITCH GEAR, ALL UNUSED PLUMBING LINES SHALL BE CAPPED IN THE WALL, OR BELOW FLOOR.

38. EXERCISE EXTREME CARE DURING DEMOLITION AS TO NOT DISRUPT OR DAMAGE ANY EXISTING UTILITIES OR SPRINKLER LINES WHICH SERVICE ADJACENT TENANTS. GENERAL CONTRACTOR WILL BEAR THE SOLE RESPONSIBILITY OF ANY SUCH DISRUPTION OR DAMAGE.

39. COORDINATE THE REMOVAL, DISCONNECTION AND/OR CAPPING OF ANY UTILITIES WITH LANDLORD'S REPRESENTATIVE AND TESLA'S PROJECT MANAGER. ALL ABANDONED ELECTRICAL, TELEPHONE CONDUIT, PLUMBING LINES, DRAIN LINES, AND MECHANICAL DUCTWORK AS THE RESULT OF DEMOLITION SHALL BE REMOVED BACK TO THE LANDLORD'S ORIGINAL POINT. PLACE MARKERS TO INDICATE LOCATION OF DISCONNECTED SERVICES.

40. HVAC SUBCONTRACTOR TO INSPECT EXISTING CONDITIONS PRIOR TO DEMOLITION, AND DETERMINE WHETHER ANY COMPRESSOR REFRIGERANT LINES ARE PRESENT THAT SHOULD BE PROPERLY DRAINED (TO E.P.A. STANDARDS) PRIOR TO DEMOLITION.

41. DEMOLISH IN AN ORDERLY AND CAREFUL MANNER AS REQUIRED TO ACCOMMODATE NEW WORK, PREVENT MOVEMENT OR SETTLEMENT OF STRUCTURE(S). PROVIDE BRACING OR SHORING AS REQUIRED. GENERAL CONTRACTOR WILL ASSUME LIABILITY FOR SUCH MOVEMENT, SETTLEMENT, DAMAGE OR INJURY.

42. PROVIDE, ERECT AND MAINTAIN BARRICADES, LIGHTING AND GUARD RAILS AS REQUIRED BY APPLICABLE REGULATORY ADVISORY TO PROTECT OCCUPANTS OF BUILDING, WORKERS, AND PEDESTRIANS.

43. GENERAL CONTRACTOR IS RESPONSIBLE FOR THE REMOVAL OF ALL UNUSED, ABANDONED AND EXTRANEOUS ITEMS. BURNING MATERIAL ON SITE IS NOT PERMITTED.

44. ALL EXISTING STRUCTURE AND FINISHES WHICH ARE NOT SPECIFICALLY INDICATED TO BE REMOVED AND DISPOSED OF SHALL BE PROTECTED FROM DAMAGE DURING CONSTRUCTION.

45. ALL EXISTING FIRE RATED ASSEMBLIES (INCLUDING PROTECTED COLUMNS) WHICH ARE TO REMAIN SHALL BE PROTECTED FROM DAMAGE TO MAINTAIN FIRE RATING. ALL EXISTING FIRE RATED ASSEMBLIES TO BE MAINTAINED. ANY DAMAGE DONE TO INTEGRITY OF ASSEMBLY DURING DEMOLITION AND NEW CONSTRUCTION SHALL BE REPAIRED BY G.C.

46. ANY REPAIR TO LANDLORD SYSTEMS MUST BE COMPLETED TO THE SATISFACTION OF THE LANDLORD SPECIFICATIONS.

47. REMOVE ALL EXISTING SIGNAGE FROM BUILDING EXTERIOR.

48. ALL EXISTING ELECTRICAL EQUIPMENT AND ELECTRICAL PANELS TO REMAIN. PROTECT FROM DAMAGE DURING CONSTRUCTION U.O. N.

49. GC TO COORDINATE FIXTURE & MILLWORK INSTALLATION WITH TESLA AND VENDOR.

50. GC TO PROVIDE F.R.T. WOOD BLOCKING AS REQUIRED FOR ALL FF+E. G.C. TO CONFIRM & COORDINATE REQUIRED BLOCKING LOCATIONS WITH PLANS & TESLA.

51. ALL EXPOSED SCREWS USED TO INSTALL METAL OR PAINTED FIXTURES | MILLWORK SHALL BE FINISHED TO MATCH THE FIXTURE | MILLWORK FINISH AS FAR AS IS PRACTICAL.

52. GC TO COORDINATE WITH ALL TESLA VENDORS.

53. GC TO VERIFY FINAL EQUIPMENT AND FIXTURE COUNTS WITH TESLA.

54. SEE SIGNAGE SCHEDULE ON A0.01 FOR SIGN TAG DESCRIPTIONS.

55. FINAL LOCATION / QUANTITIES OF FIRE EXTINGUISHERS AS DIRECTED BY FIRE DEPARTMENT.

56. G.C. TO VERIFY EXISTING CONDITIONS ON SITE. WHEN EXISTING ACCESSORIES ARE DAMAGED, MISSING OR OF POOR QUALITY, COORDINATE REPLACEMENT W/ TESLA PM. REPLACEMENT ACCESSORIES SHALL MATCH SPECIFICATIONS AS LISTED ABOVE.

57. WHERE APPLICABLE, G.C. TO VERIFY CONDITION OF EXISTING TOILET ROOM ACCESSORY FIXTURES AND COORDINATE ADDITION, REPLACEMENT, OR REMOVAL WITH TESLA PM.

58. NOTIFY TESLA DESIGN MANAGER IMMEDIATELY IF PLUMBING FIXTURES NEED TO BE REPLACED. DO NOT REMOVE OR REPLACE EXISTING UNTIL APPROVAL IS RECEIVED FROM TESLA PM.

59. THE TOILET ROOM SHALL CONFORM TO ALL LOCAL, STATE AND FEDERAL REQUIREMENTS INCLUDING, BUT NOT LIMITED TO HANDICAPPED ACCESSIBILITY REGULATIONS.ALL TOILET ROOM ACCESSORIES AND FIXTURES SHALL BE INSTALLED PER MANUFACTURER'S SPECIFICATIONS. ALL CONSTRUCTION AND MOUNTING HEIGHTS SHALL COMPLY WITH ALL APPLICABLE CITY, STATE AND FEDERAL ACCESSIBILITY REGULATIONS. COORDINATE WITH ARCHITECT FOR ALL QUESTIONABLE MOUNTING HEIGHTS.

60. REFER TO PLUMBING DRAWINGS FOR ADDITIONAL INFORMATION AND SPECIFICATIONS REGARDING PLUMBING FIXTURES.

61. ALL TOILET ROOM FINISHES SHALL BE INSTALLED PER MANUFACTURER'S RECOMMENDATIONS. REFER TO FINISH SCHEDULE FOR FINISHES.

62. THE PLUMBING CONTRACTOR IS TO FAMILIARIZE HIMSELF WITH LANDLORD'S CRITERIA FOR THIS LOCATION AND INCLUDE ANY WORK REQUIRED OF THIS CRITERIA (IF APPLICABLE), WHICH IS NOT SPECIFICALLY NOTED IN THESE DRAWINGS AND SPECIFICATIONS.

63. GC TO PROVIDE CONCEALED WOOD BLOCKING OR 20 GA. METAL BACKING PLATES AT ALL WALL MOUNTED TOILET ROOM ACCESSORIES.

64. PROVIDE LATICRETE #9235 WATERPROOFING & ANTI-FRACTURE MEMBRANE, OR EQUAL, AT NEW BATHROOM FLOORS, INSTALL PER MANUFACTURERS RECOMMENDATIONS. CONTINUE WATERPROOFING MEMBRANE A MINIMUM OF 6" AT ALL VERTICAL SURFACES

65. CAULK ALL BATHROOM FIXTURES AND ACCESSORIES WITH WHITE DAP 50 YEAR PREMIUM ELASTOMERIC LATEX SEALANT.

66. VERIFY THAT WATER CLOSET FLUSH CONTROL HANDLE IS LOCATED ON THE ACCESSIBLE SIDE OF THE TOILET (NOT WALL SIDE).

67. ACCESSIBLE SIGNAGE TO BE PROVIDED AND INSTALLED ON LATCH SIDE (WHERE POSSIBLE) OF TOILET ROOM AND EXIT DOORS, SEE 1/A0.2.

68. EXIT SIGNS SHALL BE CONNECTED TO AN EMERGENCY POWER SYSTEM THAT WILL PROVIDE AN ILLUMINATION OF NOT LESS THAN 90 MIN. IN CASE OF PRIMARY POWER LOSS.

69. G.C. TO REPAIR AND RELAMP ALL FIXTURES WITH LETTER DESIGNATIONS "E" OR "R". FIXTURES WITH LETTER DESIGNATIONS OTHER THAN "E" OR "R" ARE TO BE NEW

70. G.C. TO REPLACE ANY BROKEN, DAMAGED OR MISSING CEILING TILES TO MATCH EXISTING.

71. FIRE SPRINKLER SYSTEM SHALL BE DESIGN/BUILD AS PER GC. ALL AUTOMATIC FIRE SPRINKLER SYSTEM ENGINEERING MATERIALS AND INSTALLATION TO BE BY LANDLORD'S DESIGNATED FIRE SPRINKLER CONTRACTOR IF REQ'D AT GC'S EXPENSE.

72. FIELD VERIFY EXISTING SPRINKLER SYSTEM LAYOUT. INCLUDE MAIN TRUNK LINES. PIPING SIZES. PIPING ELEVATIONS AND CLEAR HEIGHTS, HEAD CONFIGURATIONS AND HEAD TYPE.

73. FIRE SUPPRESSION DRAWINGS UNDER SEPARATE PERMIT AND REVIEW. G.C. IS TO SUBMIT REQUIRED DRAWINGS TO FIRE DEPT.

74. ALL SPRINKLER HEADS MUST BE APPROVED BY BUILDING MANAGEMENT.

   A. LAY IN & GYP BD CEILING TO RECEIVE SEMI RECESSED WHITE HEAD AND TRIM RINGS PER TESLA'S SPEC BOOK
   B. AREAS WITH NO CEILING SHALL RECEIVE UPTURNED HEADS MATCHING BASE BUILDING STANDARDS.

75. G.C. TO REPAIR ANY FIREPROOFING DISTURBED DURING CONSTRUCTION.

76. REFER TO ENGINEERING DRAWINGS FOR ELECTRICAL, LIGHTING AND HVAC WORK. COORDINATE ANY DISCREPANCIES WITH TESLA PM.

77. BACK TO BACK SWITCHES ARE NOT ALLOWED. OFFSET A MINIMAL DIMENSION WITH METAL STUD IN BETWEEN OPPOSING SWITCHES.

78. SWITCHES SHOWN IN THE SAME LOCATION SHALL BE GANGED ON THE SAME COVER PLATE.

79. COORDINATE WITH ALL TRADES INVOLVED TO ENSURE CLEARANCES FOR ALL CEILING RELATED APPURTENANCES NECESSARY TO MAINTAIN THE SPECIFIED FINISH CEILING HEIGHT AS NOTED ON THE DRAWINGS.

80. ALL LIGHT FIXTURES, HVAC EQUIPMENT AND DIFFUSERS SHALL BE SUPPORTED FROM TOP CHORD OF STRUCTURAL JOISTS ABOVE

81. HANGER WIRE AT SUSPENDED CEILING SHALL BE 8 GA., AND 10 GA. AT SUSPENDED ACOUSTICAL TILE CEILING. WIRES SHALL BE ATTACHED TO STRUCTURAL STEEL ONLY. WITH U.L. LISTED CLAMPS. DO NOT ATTACH SUPPORT WIRES TO MECHANICAL EQUIPMENT OR PIPING. SCREWS ARE NOT PERMITTED IN THE METAL DECKING.

82. CEILING SUSPENSION SYSTEM SHALL BE ATTACHED AT TWO ADJACENT WALLS. MAINTAIN TWO SIDES UNRESTRAINED.

83. STRUCTURAL ENGINEER TO VERIFY LOCATIONS REQUIRING SEISMIC RESTRAINT OF CEILING SYSTEM.

84. GC'S ELECTRICAL CONTRACTOR TO PROVIDE POWER AS REQ'D. FOR LIT SIGNAGE. COORDINATE ALL REQUIREMENTS WITH TESLA'S PM AND SIGN VENDOR PRIOR TO CONSTRUCTION.

85. AT TOILET ROOMS, G.C. TO INSTALL WATERPROOF MEMBRANE AS REQ'D BY CODE/LANDLORD UNDERNEATH NEW FLOOR FINISH APPLICATIONS.

86. SEE THE TESLA SPECIFICATION HANDBOOK FOR EPOXY INSTALLATION INSTRUCTIONS PER TESLA'S STANDARDS.

DOORS

87. ALL DOOR HARDWARE SHALL COMPLY WITH FEDERAL & STATE ACCESSIBILITY REQUIREMENTS.

88. ALL HARDWARE SHALL BE A.N.S.I./B.H.M.A. STANDARD FINISH 626, SATIN CHROMIUM, TYPICAL (U.O.N.)

89. ALL DOOR HARDWARE SHALL BE OF THE LEVER OR PUSH TYPE, MOUNTED 30" TO 44" ABOVE THE FLOOR.

90. THE MAXIMUM FORCE REQUIRED TO OPERATE ANY DOOR SHALL COMPLY AS FOLLOWS:

   A. INTERIOR DOORS = 5 LBS.
   B. EXTERIOR DOORS = 8.5 LBS.
   C. FIRE-RATED DOORS = MINIMUM ALLOWABLE BY APPROPRIATE ADMINISTRATIVE AUTHORITY.

91. ALL MANUALLY OPERATED FLUSH BOLTS ARE PROHIBITED ON EXIT DOORS. WHEN EXIT DOORS ARE USED IN PAIRS AND APPROVED AUTOMATIC FLUSH BOLTS ARE USED, THE DOOR LEAF HAVING THE AUTOMATIC FLUSH BOLTS SHALL HAVE NO DOOR KNOB OR SURFACE MTD. HARDWARE. THE UNLATCHING OF ANY LEAF SHALL NOT REQUIRE MORE THAN ONE OPERATION.

92. G.C. TO FIELD VERIFY CONDITION OF EXISTING HARDWARE AND SUPPLEMENT AS REQUIRED..

93. G.C. TO FIELD VERIFY ALL DIMENSIONAL & HARDWARE REQUIREMENTS FOR NEW DOOR PLACEMENT INTO EXISTING FRAMED OPENINGS. COORDINATE ALL CONCERNS WITH TESLA'S PM PRIOR TO PUNCH.

94. ALL SCHLAGE LOCKSETS TO BE PROVIDED With BEST 7 INTERCHANGEABLE LOCK CODES.

95. PROVIDE LCN 4041 DEL CLOSER ON ALL FIRE AND SMOKE RATED DOOR ASSEMBLIES.

96. PROVIDE PEMKO S88 SMOKE SEAL ON ALL FIRE AND SMOKE RATED DOOR ASSEMBLIES.

97. OVERHEAD CLOSERS TO HAVE MAXIMUM OPENING FORCE OF 5 LBS (INTERIOR HINGED DOORS) THE SWEEP PERIOD OF THE CLOSER SHALL BE ADJUSTED SO THAT FROM AN OPEN POSITION OF 70 DEG. THE DOOR SHALL TAKE AT LEAST 3 SEC. TO MOVE TO A POINT 3 IN.

98. ALTERNATE HARDWARE GROUP TO BE SUBMITTED TO TESLA'S PM FOR APPROVAL

99. ALL DOORS AND FRAMES SHALL COMPLY WITH FEDERAL & STATE ACCESSIBILITY REQUIREMENTS.

100. ALL EXIT DOORS TO BE OPENABLE FROM INSIDE WITHOUT USE OF A KEY, SPECIAL KNOWLEDGE OR EFFORT.

101. ALL HANDICAP ACCESSIBLE DOORS MUST BE MINIMUM 3'-0"W x 6'-8"H.

102. ALL DOOR APPROACHES SHALL MEET A.D.A. CLEARANCE REQUIREMENTS.

103. G.C. SHALL ENSURE ALL EXISTING DOORS TO REMAIN TO BE IN GOOD OPERATING ORDER & COMPLY WITH FEDERAL & STATE ACCESSIBILITY REQUIREMENTS. G.C. TO RESTORE DOORS AND HARDWARE TO "LIKE NEW" CONDITION.

104. G.C. RESPONSIBLE FOR COORDINATING WITH ALL VENDORS AND TESLA PER THE RESPONSIBILITIES SCHEDULE.

105. G.C. RESPONSIBLE FOR RECEIVING SUBMITTAL REVIEW & APPROVAL FOR ALL SHOP DRAWINGS FROM THE TESLA DESIGN MANAGER PRIOR TO RELEASE FOR FABRICATION.

GYP. BD FINISH LEVEL

106. LEVEL 1: UTILITY ROOMS, IT ROOM, ELECTRICAL ROOM, JANITOR CLOSET
LEVEL 3: ALL EMPLOYEE BACK OF HOUSE AREAS OFFICE, OFFICE, CONFERENCE ROOM, BREAK ROOM, EMPLOYEE RESTROOM/HALLWAY
LEVEL 4: ALL CUSTOMER AREAS, SHOWROOM, SSD LOUNGE, CONFERENCE ROOM, SSD LOUNGE, SSD CONFERENCE ROOM, SSD SERVICE CUSTOMER DROP OFF (POP OUT FEATURE WALL W/WORD MARK), COLLISION RECEPTION, CUSTOMER UNISEX RESTROOM AND HALLWAY

ARCHITECT TO UPDATE PER LEASE

ITEM	FURNISHED BY	INSTALLED BY	NOTES
GENERAL			
METAL STUDS	GC	GC	-
GYP.BD	GC	GC	
CONCRETE SLAB	GC	GC	-
CONCRETE SLAB PREPARATION	GC	GC	-
DOORS/FRAMES/HARDWARE	GC	GC	-
DEMOLITION	GC	GC	-
TEMP. PHONE & FAX	GC	GC	-
LIFE & SAFETY ALARMS	GC	GC	AS REQ'D. - G.C. TO VERIFY REQUIREMENTS
CLEAN UP	GC	GC	-
FINISHES	GC	GC	-
FIRE EXTINGUISHERS	GC	GC	G.C. TO VERIFY LOCAL CODE REQUIREMENT PRIOR TO BID
EQUIPMENT & APPLIANCES	GC	GC	-
LIGHTING FIXTURE	GC	GC	-
FURNITURE	GC	GC	-
PARTS & STORAGE	O	GC	-
FIRE ALARM & FIRE SPRINKER	GC	GC	DESIGN AND PERMIT BY GC, MONITORING BY TESLA VENDOR (COMMERCIAL FIRE)
STORE TECH.			
DATA CABLING	O	O	-
CONDUIT AND BOXES FOR LOW VOLTAGE WIRING	GC	GC	REFER TO E0.01 NOTE 10 UNDER SPECIAL SYSTEMS SPEC'S
PHONES	O	O	-
SECURITY-CONTROL PANEL	O	O	-
SECURITY-MOTION SENSOR	O	O	-
SECURITY-NETWORK CAMERAS	O	O	-
STORE TECHNOLOGY HARDWARE	O	O	-
TELEVISION MONITORS	O	O	-
SIGNAGE			
ADA PARKING SIGNAGE	GC	GC	-
ADA RESTROOM SIGNS	O	O	
ADA PAINTED SYMBOL ON ASPHALT AT PARKING SPACES	GC	GC	
SIGNAGE - BRAND - (EXT)	O	O	SEE SHOP DRAWINGS, BLOCKING AND ELECTRICAL BY GC
SIGNAGE - BRAND - (INT)	O	O	SEE SHOP DRAWINGS
SIGNAGE - ROOM IDENTIFICATION	O	O	SEE SHOP DRAWINGS
STRUCTURAL	GC	GC	
SEE STRUCTURAL DRAWINGS (WHEN APPLICABLE)			
HVAC	GC	GC	
SEE MECHANICAL DRAWINGS (WHEN APPLICABLE)			
PLUMBING	GC	GC	
SEE PLUMBING DRAWINGS (WHEN APPLICABLE)			
ELECTRICAL	GC	GC	
SEE ELECTRICAL DRAWINGS (WHEN APPLICABLE)			
LIGHTING FIXTURES	O	GC	
PAINT & PREP BOOTH MATRIX OF RESPONSIBILITY			
CONCRETE	GC	GC	
FLOOR FINISH INSIDE PAINT BOOTH	GC	GC	
ELECTRICAL	GC	GC	-
GAS LINE	GC	GC	-
DUCT CURBS	GC	GC	-
DUCT ANCHORAGE	GC	GC	-
ROOFING PENETRATION	GC	GC	-
FS (WET SYSTEM) FIRE SPRINKLER	GC	GC	-
FA FIRE ALARM	GC	GC	-
EMERGENCY LIGHTS	GC	GC	-
PAINT BOOTH INSTALLATION	O	O	-
DUCT WORK	GC	GC	INCLUDING GUY WIRES & DUCT STANDS
STROBE / HORNS	GC	GC	
DATA DROPS	GC	GC	

NOTE:
ALL POINT OF CONNECTIONS BETWEEN GC AND OWNER/VENDOR SCOPES OF WORK ARE ON THE PAINT AND PREP BOOTHS.

NOTE:
AOR TO CONFIRM RESPONSIBILITY SCHEDULE CONTENT WITH TESLA PM

GENERAL NOTES | SCALE: NTS | 4

RESPONSIBILITY SCHEDULE | SCALE: NTS | 1

CONSTRUCTION DOCUMENTS

MODULUS ARCHITECTS & LAND USE PLANNING
8220 SAN PEDRO DR NE SUITE 520
ALBUQUERQUE, NEW MEXICO 87113
PHONE (505) 338-1499
FAX (505) 338-1498

STATE OF COLORADO
Stephen Aaron Dunbar
405806
LICENSED ARCHITECT

PROJECT TITLE

TESLA COLLISION CENTER

6951 S. BLACKHAWK ST, ENGLEWOOD, COLORADO 80112

PROJECT MANAGER

DRAWN BY:

ISSUE / REVISION

ISSUE DATE: 02-12-24

SHEET TITLE

GENERAL NOTES & RESPONSIBILITY SCHEDULE

SCALE:

JOB NO. 414063

SHEET NUMBER

A0.01

COPYRIGHT 2021 MODULUS ARCHITECTS
C:\Users\dorres.MODULUSARCHITEC\Documents\414063-NA-US-CO-ENGLEWOOD-TESLA-COLLISION CENTER_dorresZXELP.rvt
2/14/2024 4:16:30 PM
TESLA COLLISION CENTER

RAMPS

1. ANY PATH OF TRAVEL SHALL BE CONSIDERED A RAMP IF ITS SLOPE IS GREATER THAN 1:20 (1:12 MAXIMUM).
2. 1:12 SLOPED RAMPS WITH LENGTH GREATER THAN 72" SHALL HAVE HANDRAILS ON BOTH SIDES.
3. THE TOP LANDINGS ON A RAMP MUST BE AT LEAST 60" IN DEPTH.
4. IF A DOOR SWINGS ONTO A TOP LANDING, THE MIN. LANDING DIMENSION SHALL BE NOT LESS THAN 42" CLEAR PLUS THE WIDTH OF THE DOOR.
5. THE TOP LANDING SHALL HAVE A WIDTH NOT LESS THAN ITS DEPTH.
6. THE TOP LANDING SHALL EXTEND NOT LESS THAN 24" BEYOND THE STRIKE SIDE OF THE DOOR AT EXTERIOR RAMPS AND 18" AT INTERIOR RAMPS.
7. THE BOTTOM LANDING SHALL BE NOT LESS THAN 72" DEEP.
8. INTERMEDIATE LANDINGS SHALL BE PROVIDED AT TURNS AND WHENEVER THE CHANGE IN LEVEL EXCEEDS 30".
9. INTERMEDIATE LANDINGS ON STRAIGHT RAMPS SHALL HAVE A DEPTH OF NOT LESS THAN 5'-0" INTERMEDIATE LANDINGS ON RAMPS THAT TURN GREATER THAN 30 DEGREES SHALL BE NOT LESS THAN 6'-0" IN DEPTH.
10. RAMPS SHALL BE NOT LESS THAN 4'-0" WIDE. RAMPS SERVING A PRIMARY ENTRANCE FOR AN OCCUPANT LOAD OF 300 OR MORE PEOPLE SHALL BE NOT LESS THAN 5'-0" WIDE.
11. HANDRAILS SHALL BE PLACED ON EACH SIDE OF EACH RAMP AND SHALL BE CONTINUOUS THE FULL LENGTH OF THE RAMP. HANDRAILS SHALL BE 34" TO 38" ABOVE THE RAMP SURFACE AND EXTEND A MINIMUM OF 1'-0" BEYOND THE TOP AND BOTTOM OF THE RAMP.
12. SURFACES OF RAMPS SHALL BE SLIP-RESISTANT.

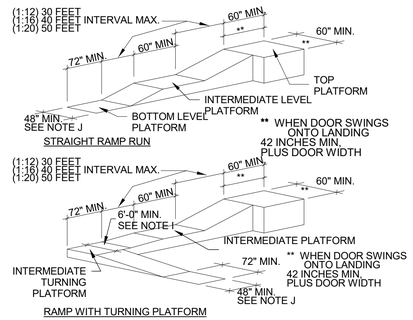

ALL RAMPS MUST MEET HANDRAIL AND CURB REQUIREMENTS.

ENTRANCES AND EXITS

1. DOOR HANDLES, PULLS, LATCHES, LOCKS, AND OTHER OPERATING DEVICES ON DOORS REQUIRED TO BE ACCESSIBLE SHALL NOT REQUIRE TIGHT GRASPING, TIGHT PINCHING OR TWISTING OF THE WRIST TO OPERATE. MANUALLY OPERATED BOLTS OR SURFACE BOLTS ARE NOT PERMITTED. THE UNLATCHING OF ANY DOOR OR LEAF SHALL NOT REQUIRE MORE THAN ONE OPERATION.
2. EVERY REQUIRED EXIT DOORWAY SHALL BE CAPABLE OF OPENING AT LEAST 90 DEGREES, SHALL HAVE A MINIMUM CLEAR OPENING OF 32 INCHES, AND SHALL BE OF A SIZE AS TO PERMIT THE INSTALLATION OF A DOOR NOT LESS THAN 3 FEET IN WIDTH AND 6 FEET 8 INCHES IN HEIGHT.
3. LATCHING AND LOCKING DOORS THAT ARE HAND ACTIVATED AND WHICH ARE IN A PATH OF TRAVEL SHALL BE OPERABLE BY LEVER TYPE HARDWARE, PANIC BARS, PUSH-PULL ACTIVATING BARS, U-SHAPED HANDLES, OR OTHER HARDWARE DESIGNED TO PROVIDE PASSAGE WITHOUT REQUIRING THE ABILITY TO GRASP THE OPENING HARDWARE.
4. HAND-ACTIVATED DOOR OPENING HARDWARE SHALL BE CENTERED BETWEEN 34 INCHES AND 48 INCHES ABOVE THE FLOOR.
5. THERE SHALL BE A LEVEL AND CLEAR FLOOR OR LANDING ON EACH SIDE OF A DOOR. THE LEVEL AREA SHALL HAVE A LENGTH IN THE DIRECTION OF DOOR SWING OF AT LEAST 60 INCHES AND THE LENGTH OPPOSITE THE DIRECTION OF DOOR SWING OF 48 INCHES AS MEASURED AT RIGHT ANGLES TO THE PLANE OF THE DOOR IN THE CLOSED POSITION.
6. THE BOTTOM 10 INCHES OF ALL DOORS EXCEPT AUTOMATIC AND SLIDING SHALL HAVE A SMOOTH, UNINTERRUPTED SURFACE TO ALLOW THE DOOR TO BE OPENED BY A WHEELCHAIR FOOTREST WITHOUT CREATING A TRAP OR HAZARDOUS CONDITION. WHERE NARROW FRAME DOORS ARE USED, A 10 INCH HIGH SMOOTH PANEL SHALL BE INSTALLED ON THE PUSH SIDE OF THE DOOR, WHICH WILL ALLOW THE DOOR TO BE OPENED BY A WHEELCHAIR FOOTREST WITHOUT CREATING A TRAP OR HAZARDOUS CONDITION.
7. OTHER THAN REQUIRED FIRE DOORS, THE MAXIMUM FORCE REQUIRED TO PUSH OR PULL OPEN AN INTERIOR OR EXTERIOR DOOR SHALL BE 5 IBF. PUSH OR PULL FORCE FOR A HINGED DOOR SHALL BE MEASURED PERPENDICULAR TO THE DOOR FACE AT THE DOOR OPENING HARDWARE OR 30 INCHES FROM THE HINGED SIDE, WHICHEVER IS FARTHER FROM THE HINGE. PUSH OR PULL FORCE FOR A SLIDING OR FOLDING DOOR SHALL BE MEASURED PARALLEL TO THE DOOR AT THE DOOR PULL OR LATCH. COMPENSATING DEVISES OR AUTOMATIC DOOR OPERATORS MAY BE USED TO MEET THE MAXIMUM FORCE LIMITS.

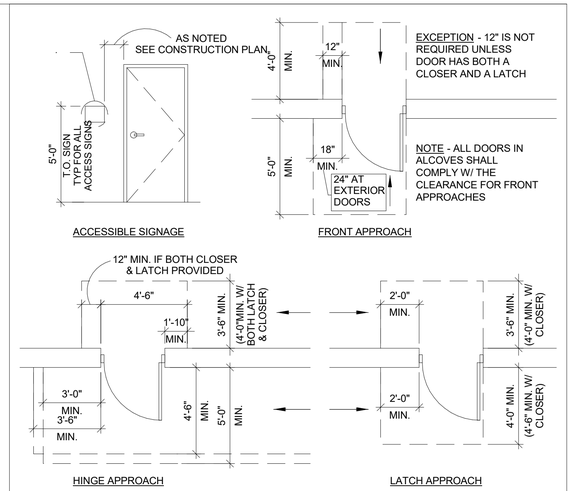

ACCESSIBLE RAMPS | SCALE: NTS | 9

ACCESSIBLE DOORS | SCALE: NTS | 3

NOTES:

1. PROVIDE DRINKING FOUNTAIN ONLY IF REQUIRED, BY CODE IF THE DRINKING FOUNTAIN IS LOCATED IN THE PATH OF TRAVEL, A TEXTURED AREA 1'-0" AROUND THE FOUNTAIN, CLEARLY IDENTIFIABLE BY THE BLIND IS REQUIRED. BUBBLER IS TO BE ACTIVATED BY A HANDICAP PUSH BAR ON THE FRONT FACE OF UNIT.
2. ONLY PROVIDE RAILING IF DRINKING FOUNTAIN IS IN THE PATH OF TRAVEL.
3. THE BUBBLER CAN BE ACTIVATED BY THE HAND OPERATED LEVER LOCATED WITHIN 6 INCHES OF THE FRONT OF THE FOUNTAIN OR BY A PUSH BAR ALONG THE FRONT OF THE FOUNTAIN.
4. A SECOND DRINKING FOUNTAIN SHALL BE PROVIDED WITH A BUBBLER HEIGHT OF ±46" FOR PEOPLE WHO HAVE DIFFICULTY BENDING OR STOOPING.
5. THE BUBBLER SHALL PROVIDE A FLOW OF WATER AT LEAST 4 INCHES HIGH, ON A FOUNTAIN WITH A ROUND OR OVAL BOWL. THE SPOUT MUST BE POSITIONED SO THE FLOW OF WATER IS WITHIN 3 INCHES OF THE FRONT EDGE OF THE FOUNTAIN.

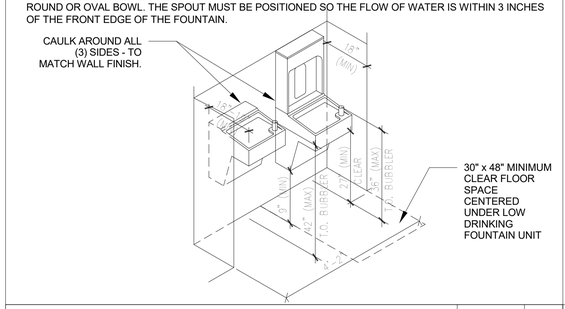

DRINKING FOUNTAIN DETAIL | SCALE: 1/2" = 1'-0" | 8

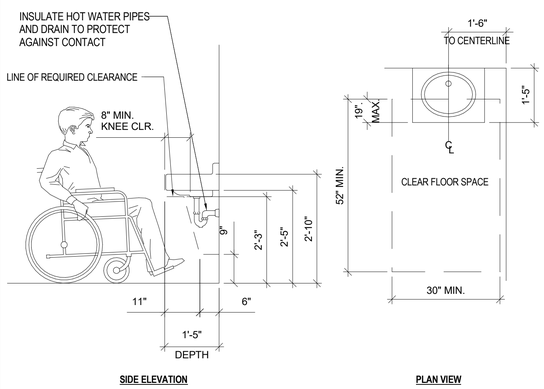

ACCESSIBLE LAVATORY

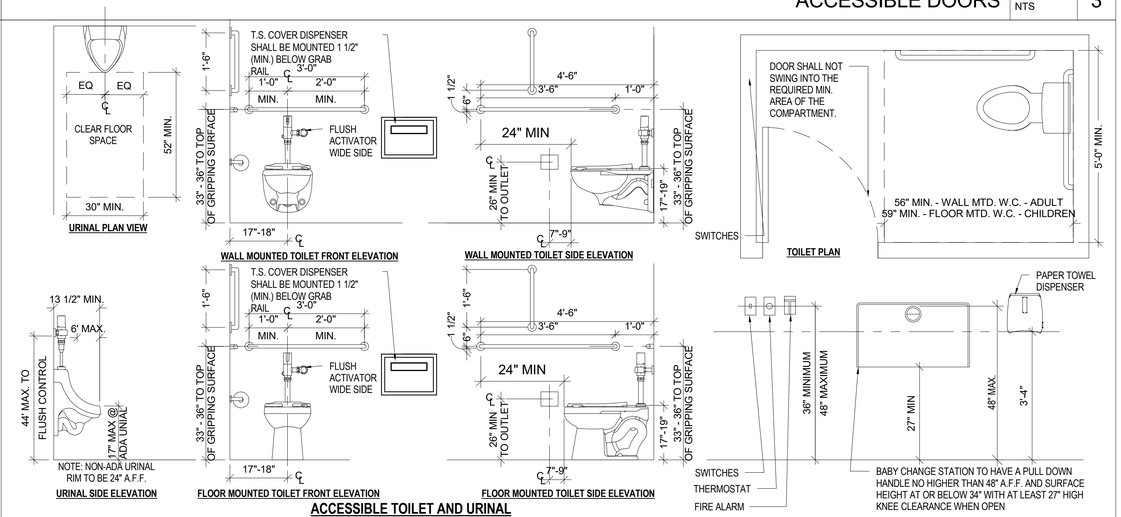

ACCESSIBLE TOILET AND URINAL

ACCESSIBLE RESTROOM DETAIL | SCALE: 1/2" = 1'-0" | 11

ACCESSIBLE RESTROOM DETAIL | SCALE: 1/2" = 1'-0" | 2

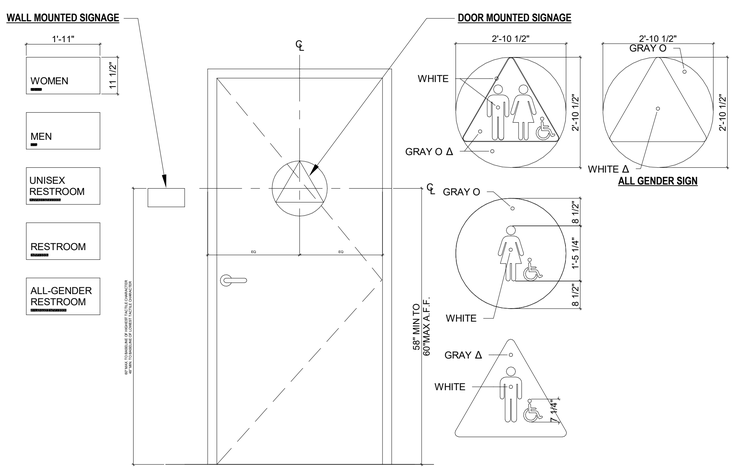

NOTE:

1. ENTRANCE SIGNAGE TO ALL TOILET ROOMS AND BATHING ROOMS MUST COMPLY WITH 2010 ADA CHAPTER 7, SECTION 3 AND 2016 CBC CHAPTER 11B SECTION 703 WHEN APPLICABLE.
2. AOR TO CONFIRM WITH LOCAL JURISDICTION ON THE COMPLIANCE OF GENDER NEUTRAL SIGNAGE WITH LOCAL CODE. WHEN ALLOWED PROVIDE GENDER NEUTRAL SIGNAGE AT ALL SINGLE USE RESTROOM AND BATHING FACILITIES.
3. AOR TO CONFIRM WITH LOCAL JURISDICTION THE REQUIREMENT OF PICTOGRAMS ON RESTROOM AND BATHING FACILITIES SIGNAGE, WHEN NOT REQUIRED, NO PICTOGRAMS SHOULD BE PROVIDED.
4. SIGNS SHALL HAVE NO SHARP EDGES, CORNERS SHALL HAVE A 1/8" MIN. RADIUS. 1/4" MIN. HIGH
5. RAISED CHARACTERS SHALL COMPLY WITH 2010 ADA CHAPTER 7, SECTION 3.2 AND 2016 CBC CHAPTER 11B SECTION 703.2 AND SHALL BE DUPLICATED IN BRAILLE CONTRACTED (GRADE 2) COMPLYING WITH 2010 ADA CHAPTER 7, SECTION 3.3 AND 2016 CBC CHAPTER 11B SECTION 703.3.
6.WALL MOUNTED, NO PLAQUES ON GLASS, 60" C.L. SIGN A.F.F MAX., 5" FROM DOOR JAM OR WALL.
7. AT TOILET ROOMS, SYMBOLS AND TEXT TO CORRESPOND WITH STATED ROOM IDENTITY. ACRYLIC PANEL WITH GRAY BACKGROUNDALL ACRYLIC TO BE DARK GRAY TO MATCH BENJAMIN MOORE TROUT GRAY.

SIGNAGE EDGES

NOTE:
USE OR MODIFY AS REQUIRED BY CODE

EACH TOILET ROOM SHALL HAVE A TACTILE SIGN WITH SYMBOLS AND TEXT TO CORRESPOND WITH STATED ROOM IDENTITY. EACH GRADE LEVEL EXTERIOR EXIT DOOR SHALL BE IDENTIFIED BY A TACTILE EXIT WITH THE WORD "EXIT." EACH EXIT DOOR THROUGH A HORIZONTAL EXIT SHALL BE IDENTIFIED BY A SIGN WITH THE WORDS "TO EXIT." EACH EXIT DOOR THAT LEADS DIRECTLY TO A GRADE-LEVEL EXTERIOR EXIT BY MEANS OF A STAIRWAY OR RAMP SHALL BE IDENTIFIED BY A TACTILE EXIT SIGN WITH THE FOLLOWING WORDS AS APPROPRIATE:

1. "EXIT STAIRS DOWN"
2. "EXIT RAMP DOWN"
3. "EXIT STAIR UP"
4. "EXIT RAMP UP"

NOTE:
ALL ROOM NAMES, ADA RESTROOM FIGURES, HC LOGO ARE TO BE 1/32" RAISED TACTILE LOGOS.
S.S. BEADS #2 GRADE BRAILLE
FONT TO BE 3/4" GOTHAM BOOK, ALL CAPS 1/32", RAISED

NOTE:
SIGNAGE SHALL COMPLY WITH ALL STANDARDS SET FORTH BY LOCAL, STATE, AND FEDERAL CODES

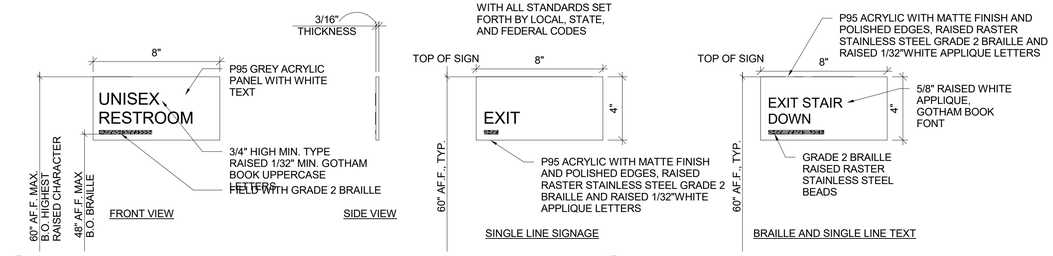

MOUNTING LOCATION SHALL BE DETERMINED SO THAT A PERSON MAY APPROACH WITHIN 3 INCHES OF SIGNAGE WITHOUT ENCOUNTERING PROTRUDING OBJECTS OR STANDING WITHIN THE SWING OF THE DOOR.

ACCESSIBLE SIGNAGE | SCALE: NTS | 1

COPYRIGHT 2021 MODULUS ARCHITECTS
C:\Users\ctorres.MODULUSARCHITEC\Documents\414063-NA-US-CO-ENGLEWOOD-TESLA-COLLISION CENTER_ctoresZXELP.rvt
2/14/2024 4:16:31 PM
TESLA COLLISION CENTER

MODULUS ARCHITECTS & LAND USE PLANNING
8220 SAN PEDRO DR NE SUITE 520
ALBUQUERQUE, NEW MEXICO 87113
PHONE (505) 338-1499
FAX (505) 338-1498

STATE OF COLORADO
Stephen Aaron Dunbar
405806
LICENSED ARCHITECT

PROJECT TITLE

TESLA COLLISION CENTER

6951 S. BLACKHAWK ST, ENGLEWOOD, COLORADO 80112

PROJECT MANAGER

DRAWN BY:

ISSUE / REVISION

ISSUE DATE: 02-12-24

SHEET TITLE

ACCESSIBILTY COMPLIANCE DETAILS

SCALE:

JOB NO. 414063

SHEET NUMBER

A0.02

CONSTRUCTION DOCUMENTS

TO PREVENT THE UNDERSIDE OF THE CAR FROM SCRAPING AT THE TOP OF OR BOTTOM OF THE RAMP: 1:6 OR 16.66% MAX SLOPE FOR CAR RAMPS. LONGER/SHALLOWER PITCH ARE PREFERRED. THE SLOPE OF THE FANNED OR FLARED SIDES OF CURB RAMPS SHALL NOT EXCEED ONE UNIT VERTICAL TO 10 UNITS HORIZONTAL.

WALKS AND SIDEWALKS

1. WALKS AND SIDEWALKS SUBJECT TO THESE REGULATIONS SHALL HAVE A CONTINUOUS COMMON SURFACE, NOT INTERRUPTED BY STEPS OR BY ABRUPT CHANGES IN LEVEL EXCEEDING 1/2".
2. WALKS AND SIDEWALKS SHALL BE 48" MINIMUM IN WIDTH.
3. WHEN CHANGE IN LEVEL NOT EXCEEDING 1/2 INCH OCCUR, THEY SHALL BE BEVELED WITH A SLOPE NO GREATER THAN ONE UNIT VERTICAL TO 2 UNITS HORIZONTAL (50 PERCENT), EXCEPT THAT LEVEL CHANGES NOT EXCEEDING 1/4 INCH MAY BE VERTICAL.
4. WHEN ABRUPT CHANGES IN LEVEL GREATER THAT 1/2" ARE NECESSARY; THEY SHALL COMPLY WITH THE REQUIREMENTS FOR CURB CUTS.
5. WALK AND SIDEWALK SURFACES SHALL BE SLIP-RESISTANT AS FOLLOWS: A. SURFACES WITH A SLOPE OF LESS THAN 6 PERCENT GRADIENT SHALL BE AT LEAST AS SLIP RESISTANT AS THAT DESCRIBED AS A MEDIUM SALTED FINISH. B. SURFACES WITH A SLOPE OF 6 PERCENT GRADIENT OR GREATER SHALL BE SLIP-RESISTANT.
6. WHEN THE SLOPE IN THE DIRECTION OF TRAVEL OF ANY WALK EXCEEDS ONE VERTICAL TO 20 UNITS HORIZONTAL (5 PERCENT GRADIENT), IT SHALL COMPLY WITH THE PROVISIONS FOR PEDESTRIAN RAMPS .
7. WALK AND SIDEWALK SURFACE CROSS SLOPES SHALL NOT EXCEED 1/4 INCH PER FOOT. ALL WALKS WITH CONTINUOUS GRADIENTS SHALL HAVE LEVEL AREAS OF AT LEAST 5 FEET IN LENGTH AT INTERVALS OF AT LEAST EVERY 400 FEET.
8. WALKS SHALL BE PROVIDED WITH A LEVEL AREA NOT LESS THAN 60 INCHES BY 60 INCHES AT A DOOR OR GATE THAT SWINGS TOWARD THE WALK, AND NOT LESS THAN 48 INCHES WIDE BY 44 INCHES DEEP THAT A DOOR OR GATE THAT SWINGS AWAY FROM THE WALK.
9. LEVEL AREA OF WALKS SHALL EXTEND 24 INCHES TO THE SIDE OF THE STRIKE EDGE OF A DOOR OR GATE THAT SWINGS TOWARD THE WALK.
10. WALKS, SIDEWALKS AND PEDESTRIAN WAYS SHALL BE FREE OF GRATING WHENEVER POSSIBLE. FOR GRATINGS LOCATED IN THE SURFACE OF ANY OF THESE AREAS, GRID OPENINGS IN THE GRATINGS SHALL BE LIMITED TO 1/2 INCH IN THE DIRECTION OF TRAFFIC FLOW. IF GRATINGS HAVE ELONGATED OPENINGS, THEY SHALL BE PLACED SO THAT THE LONG DIMENSION IS PERPENDICULAR TO THE DOMINANT DIRECTION OF TRAVEL.
11. IF A WALK CROSSES OR ADJOINS A VEHICULAR WAY, AND THE WALKING SURFACES ARE NOT SEPARATED BY CURBS, RAILINGS, OR OTHER ELEMENTS BETWEEN THE PEDESTRIAN AREAS AND VEHICULAR AREAS, THE BOUNDARY BETWEEN THE AREAS SHALL BE DEFINED BY A CONTINUOUS DETECTABLE WARNING WHICH IS 36 INCHES WIDE. ONLY APPROVED DSA/AC DETECTABLE WARNING PRODUCTS AND DIRECTIONAL SURFACES SHALL BE INSTALLED.

CURB RAMPS

1. CURB RAMPS SHALL BE CONSTRUCTED AT EACH CORNER OF STREET INTERSECTIONS. WHERE A PEDESTRIAN WAY CROSSES A CURB. THE PREFERRED AND RECOMMENDED LOCATION FOR CURB RAMPS IS IN THE CENTER OF THE CROSSWALK OF EACH STREET CORNER. WHERE IT IS NECESSARY TO LOCATE A CURB RAMP IN THE CENTER OF THE CURB RETURN AND THE STREET SURFACES ARE MARKED TO IDENTIFY PEDESTRIAN CROSSWALKS, THE LOWER END OF THE CURB RAMPS SHALL TERMINATE WITHIN SUCH CROSSWALK AREAS.
2. CURB RAMPS SHALL BE A MINIMUM OF 4 FEET IN WIDTH AND SHALL LIE, GENERALLY, IN A SINGLE SLOPED PLANE WITH A MINIMUM OF SURFACE WARPING AND CROSS SLOPE.
3. 5" MAX HEIGHT FOR WHEEL STOPS. (ONLY WHERE REQUIRED BY LOCAL CODE)
4. (ADA) TRANSITIONS FROM RAMPS TO WALKS, GUTTERS, OR STREETS SHALL BE FLUSH AND FREE OF ABRUPT CHANGES.
5. MAXIMUM SLOPES OF ADJOINING GUTTERS, ROAD SURFACE IMMEDIATELY ADJACENT TO THE CURB RAMP OR ACCESSIBLE ROUTE, SHALL NOT EXCEED ONE VERTICAL UNIT TO 20 UNITS HORIZONTAL (5 PERCENT SLOPE) WITHIN 4 FEET OF THE TOP AND BOTTOM OFF THE CURB RAMP. THE SLOPE OF THE FANNED OR FLARED SIDES OF CURB RAMPS SHALL NOT EXCEED ONE UNIT VERTICAL TO 10 HORIZONTAL (10 PERCENT SLOPE).
6. A LEVEL LANDING 4 FEET DEEP SHALL BE PROVIDED AT THE UPPER END OF EACH CURB RAMP OVER ITS FULL WIDTH TO PERMIT SAFE EGRESS FROM THE RAMP SURFACE, OR THE SLOPE OF THE FANNED OR FLARED SIDES OF THE CURB RAMP SHALL NOT EXCEED ONE UNIT VERTICAL TO 12 UNITS HORIZONTAL (8.33 PERCENT SLOPE). GROUND AND FLOOR SURFACES SHALL BE OF CONTRASTING FINISH FROM THAT OF THE ADJACENT SIDEWALK.
7. ALL CURB RAMPS SHALL HAVE A GROOVED BORDER 12 INCHES WIDE AT THE LEVEL SURFACE OF THE SIDEWALK ALONG THE TOP AND EACH SIDE APPROXIMATELY 3/4 INCH ON CENTER. ALL CURB RAMPS CONSTRUCTED BETWEEN THE FACE OF THE CURB AND THE STREET SHALL HAVE A GROOVED BORDER AT THE LEVEL SURFACE OF THE SIDEWALK. CURB RAMPS SHALL HAVE A DETECTABLE WARNING THAT EXTENDS THE FULL WIDTH AND DEPTH OF THE CURB RAMP, EXCLUDING THE FLARED SIDES, INSIDE THE GROOVED BORDER. DETECTABLE WARNINGS SHALL CONSIST OF RAISED TRUNCATED DOMES WITH DIAMETER OF NOMINAL 0.9 INCH AT THE BASE TAPERING TO 0.45 INCH AT THE TOP, A HEIGHT OF NOMINAL 0.2 INCH, AND A CENTER-TO-CENTER SPACING OF NOMINAL 2.35 INCHES. THE DETECTABLE WARNING SHALL CONTRAST VISUALLY WITH ADJOINING SURFACES, EITHER LIGHT-ON-DARK OR DARK-ON-LIGHT. THE MATERIAL USED TO PROVIDE CONTRAST SHALL BE AN INTEGRAL PART OF THE WALKING SURFACE. THE DOMES MAY BE CONSTRUCTED IN A VARIETY OF METHODS, INCLUDING CAST-IN-PLACE OR STAMPED, OR MAY BE A PART OF A PREFABRICATED SURFACE TREATMENT. ONLY APPROVED DSA-AC DETECTABLE WARNING PRODUCTS AND DIRECTIONAL SURFACES SHALL BE INSTALLED. CURB RAMPS SHALL BE LOCATED OR PROTECTED TO PREVENT THEIR OBSTRUCTION BY PARKED CARS.

SITE

1. ALL ACCESSIBLE PARKING SPACES SHALL NOT EXCEED THE MAXIMUM PERMITTED SLOPE OF 2.0% IN ANY DIRECTION.
2. THE CONTRACTOR SHALL REMOVE EXISTING STRIPING BY SANDBLASTING ALL AREAS TO BE RESTRIPED, PRIOR TO PAINTING NEW STRIPING.
3. THE SIX INCHES OF CURB OR ROADWAY ADJACENT TO ROAD EDGE SHALL BE PAINTED RED ALONG THE ENTIRE LENGTH OF THE FIRE LANE.
4. THE WORDS "FIRE LANE" SHALL BE PAINTED IN WHITE LETTERS AT LEAST EVERY 50 L.F. ON THE ROADWAY EDGE. THE LETTERS SHALL BE A MINIMUM OF FOUR INCHES IN HEIGHT WITH A MINIMUM 1/2" STROKE.
5. SIGNS DISPLAYING THE INTERNATIONAL SYMBOL OF ACCESSIBILITY AND DIRECTION OF TRAVEL (SEE DETAILS) SHALL BE LOCATED AT EVERY MAJOR JUNCTION ALONG OR LEADING TO AN ACCESSIBLE ROUTE OF TRAVEL.
6. THE CONTRACTOR SHALL VERIFY THAT ACCESSIBLE PARKING NOTIFICATION SIGNS ARE POSTED CONSPICUOUSLY AT EACH ENTRANCE TO THE SITE. IF MISSING, THE CONTRACTOR SHALL INSTALL NEW NOTIFICATION SIGNS PER DETAIL 1/A0.03.

PAINT SPECIFICATIONS

1. SHERWIN WILLIAMS PRO-PARK WATERBORNE TRAFFIC MARKING PAINT

A) PT-15 PRODUCT NUMBER: B97WD2434 WHITE
B) PT-16 PRODUCT NUMBER: B97LD2022 BLUE
C) PT-17 PRODUCT NUMBER: B97BD2021 BLACK
D) PT-18 PRODUCT NUMBER: B97RD2012 RED
E) PT-19 PRODUCT NUMBER: B97YD2467 YELLOW

GENERAL SITE NOTES | SCALE: NTS | 8

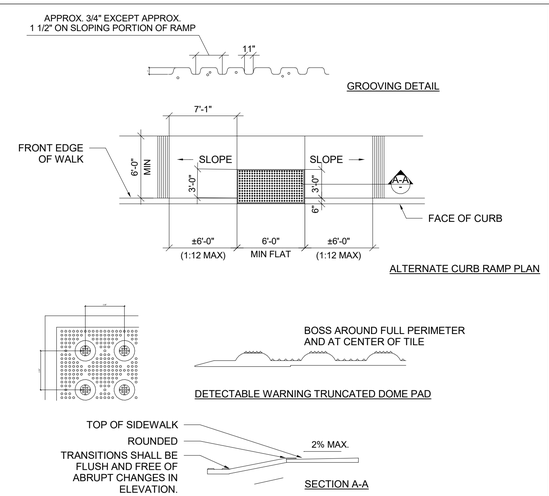

ALTERNATE ACCESSIBLE CURB RAMP | SCALE: NTS | 7

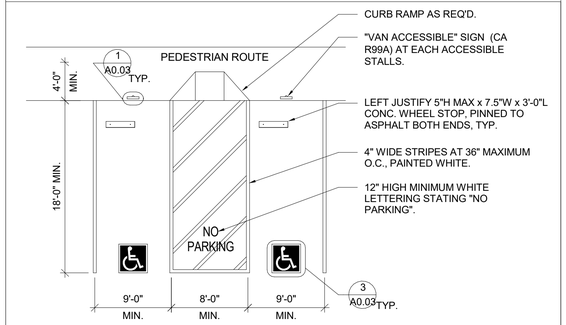

*** ACCESSIBLE PARKING DIMENSIONS/REQUIREMENTS VARIES PER LOCAL CODE**

VAN ACCESSIBLE PARKING STALL | SCALE: 1/8" = 1'-0" | 6

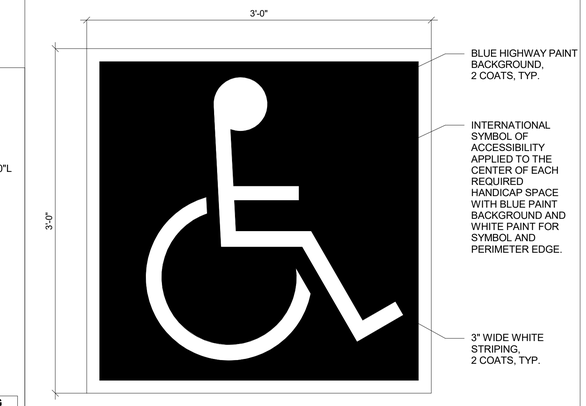

SYMBOL DISPLAY PROPERTIES AND CONDITIONS

INTERNATIONAL ACCESSIBLE SYMBOL | SCALE: 1-1/2" = 1'-0" | 3

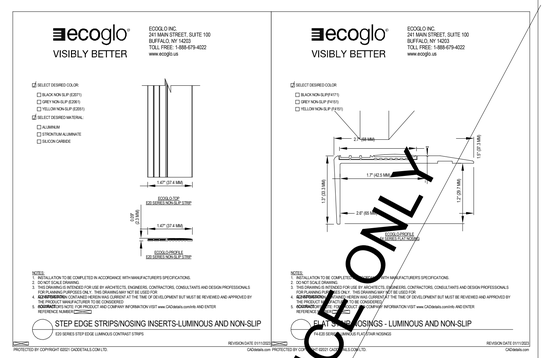

NOTE: FOR REFERENCE ONLY, NOT EVERY PROJECT WILL HAVE STAIRS AS A CONDITION. DIFFERENCES PER CODE OR JURISDICTION SHOULD BE CONFIRMED BY AOR AND FOLLOWED AS STANDARD REQUIREMENT.

STAIR STRIPING | SCALE: NTS | 5

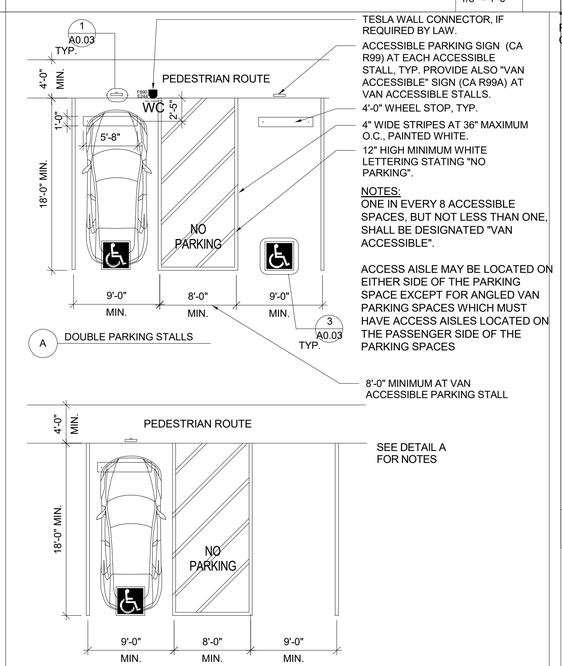

*** ACCESSIBLE PARKING DIMENSIONS/REQUIREMENTS VARIES PER LOCAL CODE**

ACCESSIBLE PARKING STALLS | SCALE: 1/8" = 1'-0" | 4

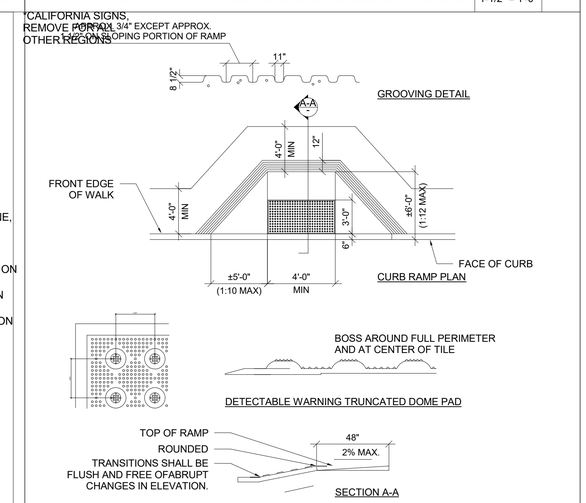

ACCESSIBLE CURB RAMPS | SCALE: NTS | 2

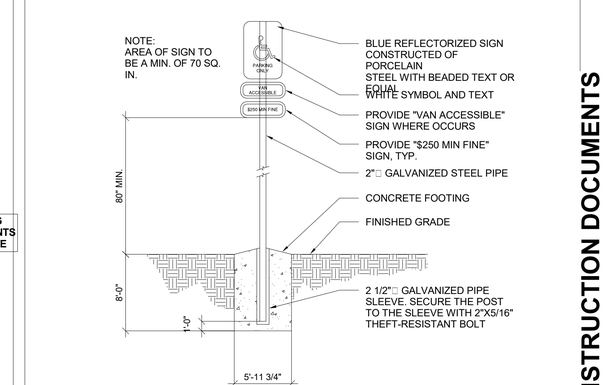

ACCESSIBLE PARKING SIGN | SCALE: 1/2" = 1'-0" | 1

CONSTRUCTION DOCUMENTS

MODULUS ARCHITECTS & LAND USE PLANNING
8220 SAN PEDRO DR NE SUITE 520
ALBUQUERQUE, NEW MEXICO 87113
PHONE (505) 338-1499
FAX (505) 338-1498

STATE OF COLORADO
Stephen Aaron Dunbar
405806
LICENSED ARCHITECT

PROJECT TITLE

TESLA COLLISION CENTER

6951 S. BLACKHAWK ST, ENGLEWOOD, COLORADO 80112

PROJECT MANAGER

DRAWN BY:

ISSUE / REVISION

ISSUE DATE: 02-12-24

SHEET TITLE

GENERAL SITE NOTES & ACCESSIBILTY COMPLIANCE DETAILS

SCALE:

JOB NO. 414063

SHEET NUMBER

A0.03

COPYRIGHT 2021 MODULUS ARCHITECTS
C:\Users\ctorres.MODULUSARCHITECT\Documents\414063-NA-US-CO-ENGLEWOOD-TESLA-COLLISION CENTER_ctorresZXELP.rvt
2/14/2024 4:16:32 PM
TESLA COLLISION CENTER

COPYRIGHT 2021 MODULUS ARCHITECTS
C:\Users\ctorres.MODULUSARCHITEC\Documents\414063-NA-US-CO-ENGLEWOOD-TESLA-COLLISION CENTER_ctorresZXELP.rvt
2/15/2024 9:35:25 AM
TESLA COLLISION CENTER

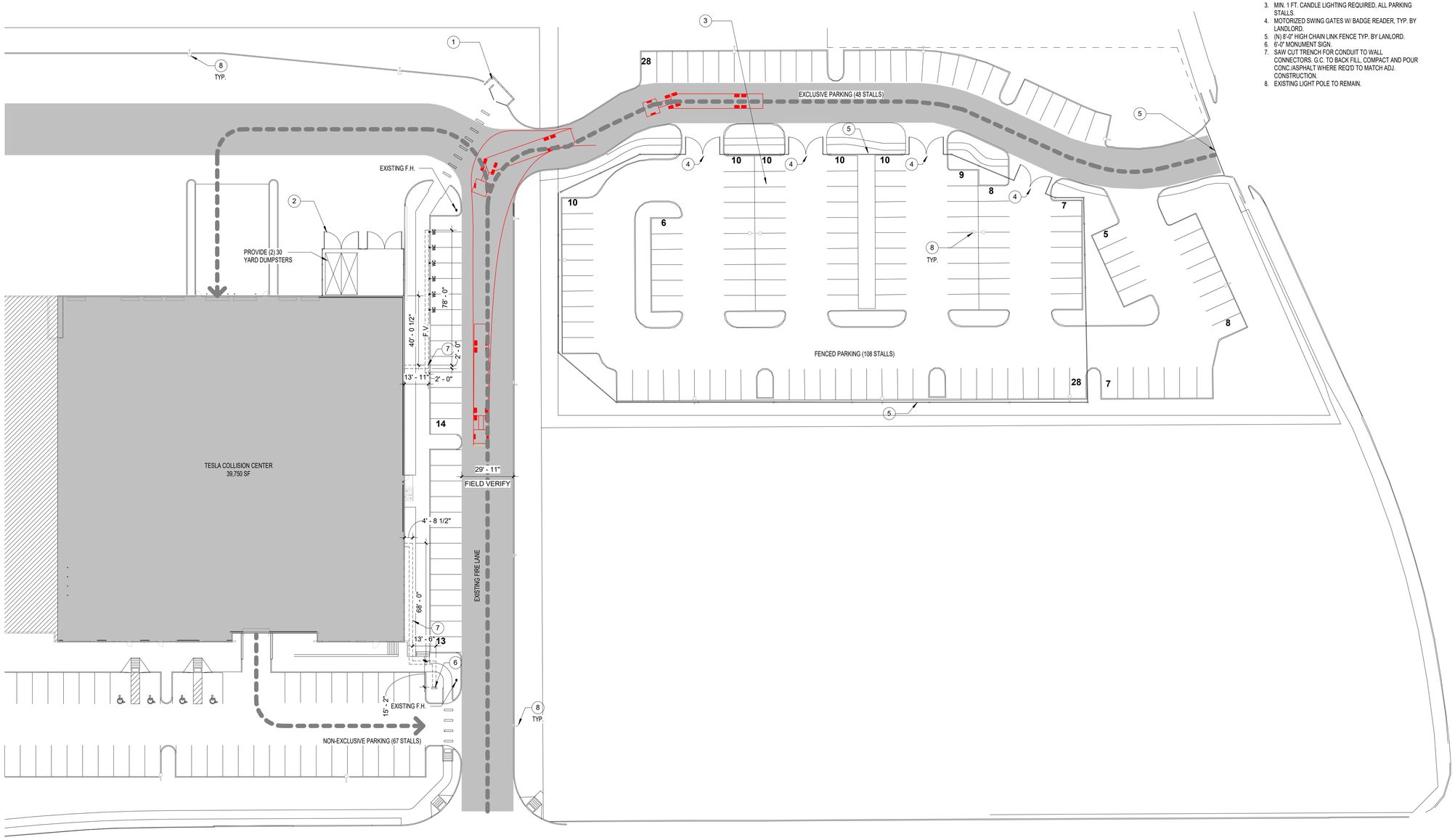

1 OVERALL ARCHITECTURAL SITE PLAN

SCALE: **1" = 30'-0"**

KEY NOTES:

1. EXISTING ENCLOSURE FOR TIRE STORAGE.
2. FENCED ENCLOSURE WITH PRIVACY SCREEN AND MANUAL GATES BY LANDLORD.
3. MIN. 1 FT. CANDLE LIGHTING REQUIRED, ALL PARKING STALLS.
4. MOTORIZED SWING GATES W/ BADGE READER, TYP. BY LANDLORD.
5. (N) 8'-0" HIGH CHAIN LINK FENCE TYP. BY LANLORD.
6. 6'-0" MONUMENT SIGN.
7. SAW CUT TRENCH FOR CONDUIT TO WALL CONNECTORS. G.C. TO BACK FILL, COMPACT AND POUR CONC./ASPHALT WHERE REQ'D TO MATCH ADJ. CONSTRUCTION.
8. EXISTING LIGHT POLE TO REMAIN.

MODULUS ARCHITECTS & LAND USE PLANNING
8220 SAN PEDRO DR NE SUITE 520
ALBUQUERQUE, NEW MEXICO 87113
PHONE (505) 338-1499
FAX (505) 338-1498

STATE OF COLORADO
Stephen Aaron Dunbar
405806
LICENSED ARCHITECT

PROJECT TITLE

TESLA COLLISION CENTER

6951 S. BLACKHAWK ST, ENGLEWOOD, COLORADO 80112

PROJECT MANAGER

DRAWN BY:

ISSUE / REVISION

ISSUE DATE: 02-12-24

SHEET TITLE

ARCHITECTURAL SITE PLAN

SCALE:

JOB NO. 414063

SHEET NUMBER

A1.01

CONSTRUCTION DOCUMENTS

IBC 2021 CODE SEARCH

CLASSIFICATION GROUP	(S1) STORAGE
TOTAL SQUARE FOOTAGE	39,750 S.F.
BUILDING HEIGHT	48'-0" MAX.
FIRE PROTECTION:	FULLY SPRINKLED- QUICK RESPONSE TABLE 601
CONSTRUCTION TYPE:	IIB
OCCUPANT LOAD:	54.33 (55)
MEANS OF EGRESS:	55x .2" = 11"
(F.E.) FIRE EXTINGUISHER:	LARSEN'S BRACKET MOUNTED MP10 OR EQUIVALENT
(F.E.C.) FIRE EXTINGUSIHER CABINET	LARSEN'S SEMI-RECESSED FIRE EXTINGUISHER CABINET 2409-6R
IFC 902.2.13.1.2	SMOKE DETECTORS TO BE LOCATED IN RETURN AIR DUCT
SEISMIC CATEGORY:	B
ALTERATION LEVEL:	2

PLUMBING FIXUTRES:

(S1)
STORAGE: 1 PER 100 MALE/FEMALE
174/2=87 MALE, 87 FEMALE TOTAL REQUIRED 1 EA.
TOTAL PROVIDED 9 MALE, 3 FEMALE

GRAND TOTAL: 12

LAVATORY: 1:100
DRINKING FOUNTAIN: 1:1000

LAVATORIES REQUIRED: 2, TOTAL PROVIDED 3 EA.

SCOPE OF WORK:

COLLISION REPAIR TENANT IMPROVEMENT OF AN EXISTING SHELL WAREHOUSE. MODIFICAITON TO THE SLAB TO ACCOMODATE PAINT BOOTH PITS AND WASHBAY AND TRENCH DRAIN. THE SCOPE WILL ALSO INCLUDE MODIFICATION TO THE SPRINKLER SYSTEM. ELECTRICAL WORK WILL INCLUDE NEW PANELS TO SERVE SHOP EQUIPMENT.

GENERAL NOTES:

1. SHOP DRAWINGS WILL BE SUBMITTED TO THE FIRE MARSHAL'S OFFICE FOR REVIEW AND APPROVAL OF ANY INSTALLATION OR MODIFICATION TO THE FIRE SPRINKLER SYSTEM, FIRE ALARM SYSTEM, OR ANY OTHER FIRE RELATED SYSTEMS.
2. BUILDING AND ALL ACCESSORIES ARE TO MEET 2012 ICC/ANSI A117.1
3. EGRESS PATH SHOWN FOR DIAGRAMAITC PURPOSES. FINAL EGRESS PATH TO BE COORDINATED WITH TENANT F.F.E. PLAN.
4. TENANT TO MAINTAIN EGRESS PATH TO EXTERIOR DOORS AS DIRECTED BY FIRE MARSHALL.

APPLICABLE CODES:

ALL CONSTRUCTIONSHALL CONFORM TO THE LATEST EDITION OF APPLICABLE LOCAL, STATE AND NATIONAL CODES AND ORDAINANCES. ALL CONSTRUCTION SHALL CONFORM TO THE FOLLOWING NATIONAL CODES AT A MINIMUM:

2021 INTERNATIONAL BUILDING CODE (IBC)
2015 INTERNATIONAL EXISTING BUILDING CODE (IEBC)
2021 UNIFORM MEHCANICAL CODE
2021 UNIFORM PLUMBING CODE
2020 NATIONAL ELECTRICAL CODE
2018 INTERNATIONAL ENERGY CONSERVATION CODE
2021 INTERNATIONAL FIRE CODE
(ADA) ICC/ANSI A117.1-2012 AMERICAN NATIONAL STANDARDS

LIFE SAFETY LEGEND

DISTANCE TO NEAREST EXIT — 100'
EXIT ACCESS
EXIT/EXIT DISCHARGE
EXIT LIGHT
EXISTING EXIT LIGHT
SQUARE FOOTAGE — XXX
LOAD FACTOR — XXX
OCCUPANTS/ ROOM — XXX
EM — EMERGENCY LIGHTS
FE — FIRE EXTINGUISHER
F.E.C. — FIRE EXTINGUISHER CABINET
1 HOUR RATED WALL
WIDTH REQUIRED
EGRESS CAPACITY FACTOR — XXX"X.X= XX"
OCCUPANT LOAD
EMERGENCY LIGHTING

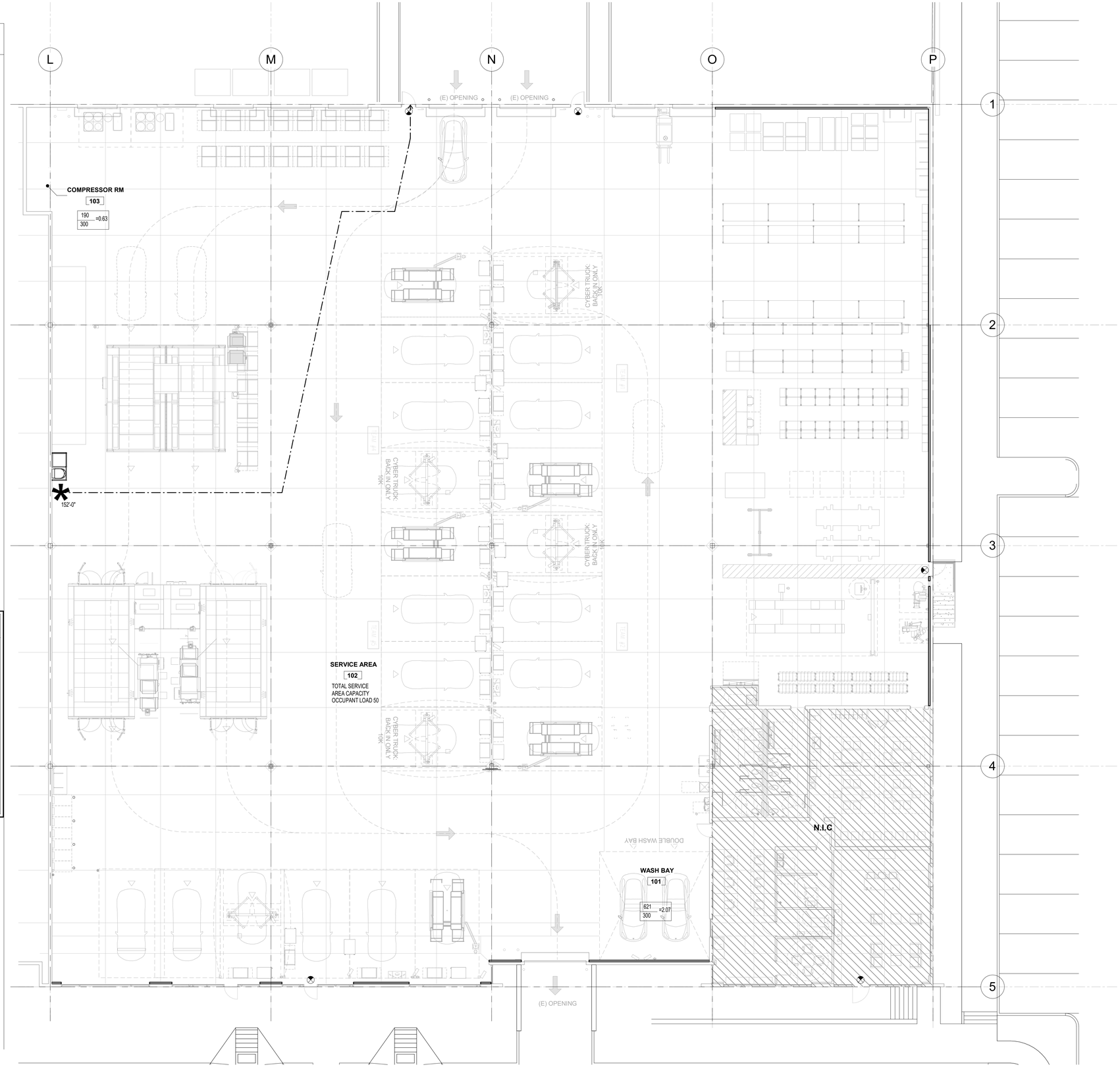

1 **LIFE SAFETY PLAN**
SCALE: **3/32" = 1'-0"**

MODULUS ARCHITECTS & LAND USE PLANNING
8220 SAN PEDRO DR NE SUITE 520
ALBUQUERQUE, NEW MEXICO 87113
PHONE (505) 338-1499
FAX (505) 338-1498

STATE OF COLORADO
Stephen Aaron Dunbar
405806
LICENSED ARCHITECT

PROJECT TITLE

TESLA COLLISION CENTER

6951 S. BLACKHAWK ST, ENGLEWOOD, COLORADO 80112

PROJECT MANAGER

DRAWN BY:

ISSUE / REVISION

ISSUE DATE: 02-12-24
SHEET TITLE

LIFE SAFETY PLAN

SCALE:
JOB NO. 414063

SHEET NUMBER

A1.02

CONSTRUCTION DOCUMENTS

COPYRIGHT 2021 MODULUS ARCHITECTS
C:\Users\ctorres.MODULUSARCHITEC\Documents\414063-NA-US-CO-ENGLEWOOD-TESLA-COLLISION CENTER_ctorresZXELP.rvt
2/14/2024 4:16:37 PM
TESLA COLLISION CENTER

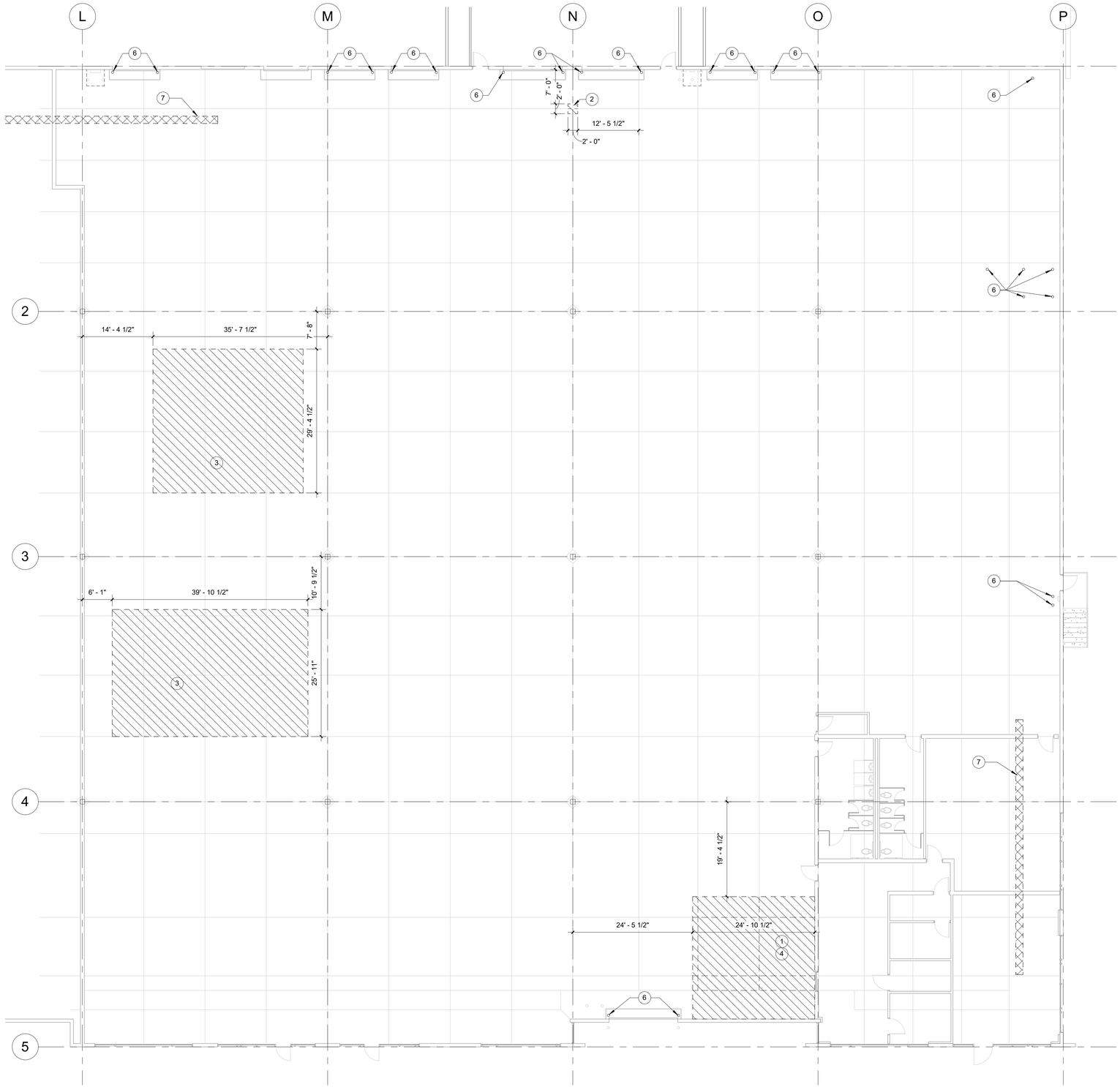

1 DEMOLITION FLOOR PLAN

SCALE: **3/32" = 1'-0"**

KEY NOTES:

1. G.C. TO VERIFY LOCATION & COORDINATE W/PLUMBING DRAWINGS CONNECTION TO EXISTING SEWER.
2. REMOVE SLAB AS REQUIRED FOR PLUMBING. REFER TO PLUMBING DRAWINGS.
3. PAINT BOOTH PITS, RE: STR. DRAWINGS & COORD. W/ PAINT BOOTH DRAWINGS PRIOR TO ANY DEMO.
4. SAW CUT CONC. SLAB FOR WASHBAY INSTALLATION, INFILL AS NEEDED, RE: STR. DRAWINGS.
5. SAW CUT (E) CONCRETE SLAB FOR SAND OIL SEPARATOR.
6. REMOVE BOLLARDS. PATCH AND REPAIR CONCRETE SLAB AS REQUIRED.
7. (E) IRH TO BE REMOVED AND STORED IN AN AREA ACCEPTABLE TO OWNER FOR REUSE. REFER TO MECH. DRAWINGS FOR LOCATION.

MODULUS ARCHITECTS & LAND USE PLANNING
8220 SAN PEDRO DR NE SUITE 520
ALBUQUERQUE, NEW MEXICO 87113
PHONE (505) 338-1499
FAX (505) 338-1498

STATE OF COLORADO
Stephen Aaron Dunbar
405806
LICENSED ARCHITECT

PROJECT TITLE

TESLA COLLISION CENTER

6951 S. BLACKHAWK ST, ENGLEWOOD, COLORADO 80112

PROJECT MANAGER

DRAWN BY:

ISSUE / REVISION

ISSUE DATE: 02-12-24

SHEET TITLE

DEMOLITION FLOOR PLAN

SCALE:

JOB NO. 414063

SHEET NUMBER

A1.03

CONSTRUCTION DOCUMENTS

COPYRIGHT 2021 MODULUS ARCHITECTS
C:\Users\ctorres.MODULUSARCHITEC\Documents\414063-NA-US-CO-ENGLEWOOD-TESLA-COLLISION CENTER_ctoresZXELP.rvt
2/14/2024 4:16:38 PM
TESLA COLLISION CENTER

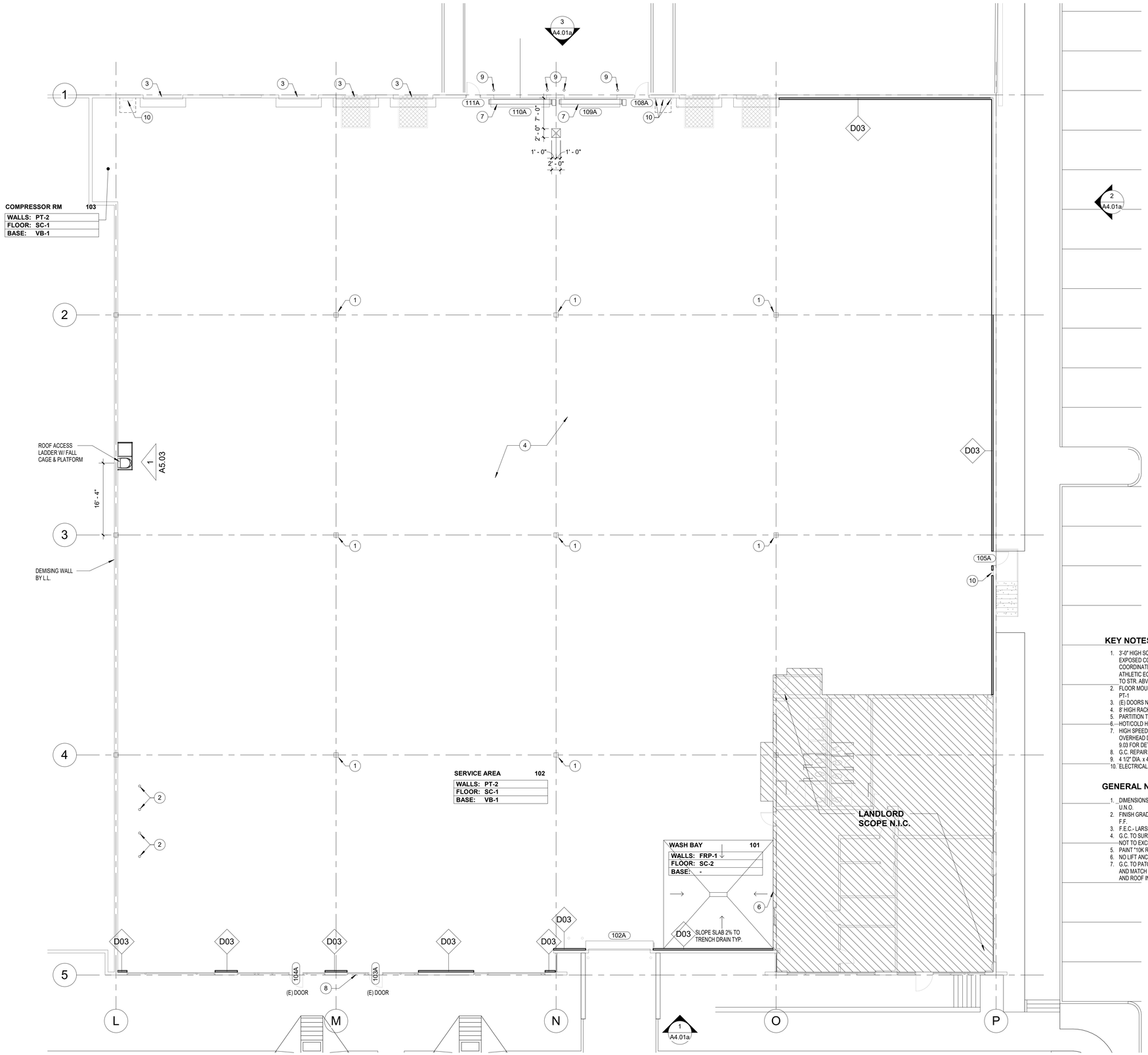

1 FLOOR PLAN

SCALE: 3/32" = 1'-0"

KEY NOTES:

1. 3'-0" HIGH SQUARE PADDING COL. WRAP IN RED AT ALL EXPOSED COLUMNS IN SERVICE AREA. G.C. TO COORDINATE WITH EQUIPMENT LAYOUT, BY AK ATHLETIC EQUIPMENT. PAINT COL PT-2 FROM 36" A.F.F. TO STR. ABV.
2. FLOOR MOUNTED 4 1/2" DIA. x 36"H BOLLARD PAINT RED PT-1
3. (E) DOORS NOT IN USE.
4. 8' HIGH RACKING
5. PARTITION TYPE D03 HT. TO BE 12'-0" A.F.F.
6. HOT/COLD HOSE BIB RE: PLUMB FOR LOCATION
7. HIGH SPEED OVERHEAD FABRIC DOOR, IN SERIES WITH OVERHEAD DOOR. SEE DOOR SCHEDULE AND SHEET 9.03 FOR DETAILS.
8. G.C. REPAIR DAMAGED EXTERIOR STOREFRONT.
9. 4 1/2" DIA. x 40"H BOLLARD, SEE DETAIL 7/A8.02
10. ELECTRICAL PANEL. SEE ELECTRICAL DRAWINGS.

GENERAL NOTES:

1. DIMENSIONS ARE FROM FACE OF STUD TO FACE OF STUD U.N.O.
2. FINISH GRADE OUTSIDE EACH DOOR TO BE MAX -1/2" FROM F.F.
3. F.E.C.- LARSEN'S 2409-5R OR EQUIV.
4. G.C. TO SURVEY EXISTING SLAB TO ENSURE LEVEL. SLAB NOT TO EXCEED 1% AT LIFTS & ALIGNMENT RACKS.
5. PAINT "10K RATED" AT EACH 2 POST LIFTS.
6. NO LIFT ANCHORS TO BE WITHIN 8" OF C.J. OR CRACKS
7. G.C. TO PATCH AND REPAIR EXTERIOR INSULATION R-VALUE AND MATCH EXISTING. (E) INSULATION TO REMAIN AT WALLS AND ROOF IN SHOP AREA.

CONSTRUCTION DOCUMENTS

MODULUS ARCHITECTS & LAND USE PLANNING
8220 SAN PEDRO DR NE SUITE 520
ALBUQUERQUE, NEW MEXICO 87113
PHONE (505) 338-1499
FAX (505) 338-1498

STATE OF COLORADO
Stephen Aaron Dunbar
405806
LICENSED ARCHITECT

PROJECT TITLE

TESLA COLLISION CENTER

6951 S. BLACKHAWK ST, ENGLEWOOD, COLORADO 80112

PROJECT MANAGER

DRAWN BY:

ISSUE / REVISION

ISSUE DATE: 02-12-24

SHEET TITLE

CONSTRUCTION & FINISH PLAN

SCALE:

JOB NO. 414063

SHEET NUMBER

A2.01

COPYRIGHT 2021 MODULUS ARCHITECTS
2/15/2024 11:39:50 AM C:\Users\dtorres.MODULUSARCHITEC\Documents\414063-NA-US-CO-ENGLEWOOD-TESLA-COLLISION CENTER_dtoresZXELP.rvt
TESLA COLLISION CENTER

COPYRIGHT 2021 MODULUS ARCHITECTS
C:\Users\storres.MODULUSARCHITE\Documents\414063-NA-US-CO-ENGLEWOOD-TESLA-COLLISION CENTER_storresZXELP.rvt
2/14/2024 4:16:43 PM
TESLA COLLISION CENTER

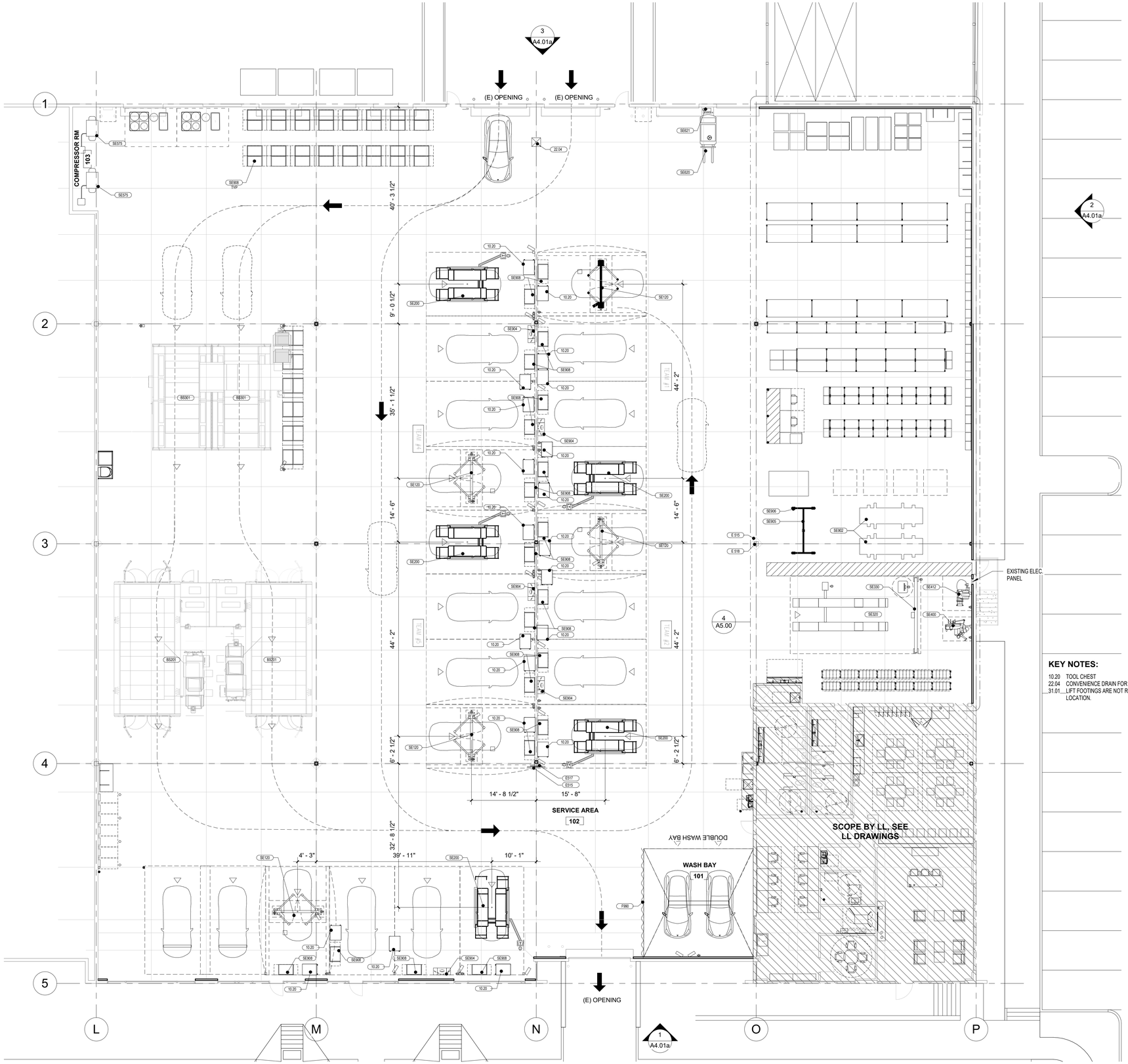

1 EQUIPMENT PLAN

SCALE: 3/32" = 1'-0"

KEY NOTES:

10.20 TOOL CHEST
22.04 CONVENIENCE DRAIN FOR COLD & WET CLIMATES.
31.01 LIFT FOOTINGS ARE NOT REQUIRED AT THIS LOCATION.

MODULUS ARCHITECTS & LAND USE PLANNING
8220 SAN PEDRO DR NE SUITE 520
ALBUQUERQUE, NEW MEXICO 87113
PHONE (505) 338-1499
FAX (505) 338-1498

STATE OF COLORADO
Stephen Aaron Dunbar
405806
LICENSED ARCHITECT

PROJECT TITLE

TESLA COLLISION CENTER

6951 S. BLACKHAWK ST, ENGLEWOOD, COLORADO 80112

PROJECT MANAGER

DRAWN BY:

ISSUE / REVISION

ISSUE DATE: 02-12-24

SHEET TITLE

FURN. FIXTURE EQUIP. & SIGNAGE PLAN

SCALE:

JOB NO. 414063

SHEET NUMBER

A2.02

CONSTRUCTION DOCUMENTS

FURNITURE FIXTURES AND EQUPMENT SCHEDULE

P/C	DESCRIPTION	REMARKS	RESP.	COUNT
BREAKROOM				
E 106	COMMERCIAL ICE MAKER/WATER DISPENSER | BREAK RM	ACCUCOLD ICE/WATER DISPENSER: AIR COOLED, NUGGET CUBE TYPE, 282 LB ICE PRODUCTION PER DAY. #56LP12 MFR. MODEL #AIWD282+F11:K11	GC	
E 120	MICROWAVE | BREAK RM	AVANTI M07191TW	GC	
E 131	COFFEE MAKER | BREAK RM | DIRECT WATER CONNECTION	NESPRESSO ZENIUS BRUSS SS + BLACK	GC	
F 401	BREAK ROOM CHAIR | WHITE AND SS	KAHL	GC	
F 940	BREAK ROOM LOCKERS	HALLOWELL UH1258-3A 3 HIGH x 1 WIDE	GC	
F 106	TABLE | RECTANGLE | WHITE | 4-6 PEOPLE	TORSBY | 399.318.45 | CHROME PLATED | HIGH GLOSS WHITE	GC	
P181	BREAK ROOM SINK	AMERICAN STANDARD 18SB6332211.075		
F 816	WASTE BIN, INTERIOR | EMPLOYEE	OPEN TOP | 16 GAL | CONFIGURE	TESLA	
F 816	RECYCLE BIN, INTERIOR | EMPLOYEE	OPEN TOP | 16 GAL | CONFIGURE		
E 810	VENDING MACHINE			
E 8113	REFRIGERATOR COMMERCIAL 54" | MEDIUM- TWO SWINGING DOORS | BREAK RM	TRUE GDM-49-HC- TSL01 WHITE, NEMA 5-15P PLUG		
F 215	BASE CABINET SEKTON WITH DOORS, WHITE, 36"W x 24" D	IKEA 490.343.91	GC	
F 216	DOOR HANDLES STAINLESS STEEL 2 PACK 5,5"	IKEA 701.169.31	GC	
CONFERENCE ROOM AND OFFICES				
F105	TABLE | ROUD | WHITE | CONFERENCE RM	IKEA DOCKSTA 400.636.32 4-6 PEOPLE		
F 305	CHAIR | BLACK | MESH BACK | CONF RM | OFFICE	MILAN 23.75-32.75		
F 700	CREDENZA, 2 SLIDING DOORS, LOCKING	IKEA 303.651.35		
F 705	CABINET, 2 LATERAL DRAWERS, LOCKING	ALERA 5000 SERIES		
F 711	CABINET, 2 DRAWER PEDESTAL, NON-LOCKING			
E 551	PRINTER			
M 202	5'-0" DESK	DESK, 60" X 30"		2
EXTERIOR				
E 244	WALL CONNECTOR GEN 3 EMPLOYEE USE, 18'/24' CABLE	AERVICE AREA | PN	TESLA/GC	8
F 800	KEY DROP BOX, WALL MOUNT		GC	1
F 810	WASTE BIN, EXTERIOR | CUSTOMER FACING	UMEA | BRIGHTBOND SILVER BODY SDE PANEL + HOOD | WASTE LABEL	GC	1
F811	RECYCLE BIN, EXTERIOR | CUSTOMER FACING	UMEA | BRIGHTBOND SILVER BODY SDE PANEL + HOOD | RECYCLE LABEL	GC	1
F817	WASTE BIN XL, EXTERIOR | CUSTOMER FACING	OPEN TOP W/ WEATHER SHIELD, SS, 51 GAL	GC	1
F820	ASHTRAY	CHECK BEFORE ORDER	GC	1
F 890	TESLA WALL CONNECTOR PEDISTAL	WALL CONNECTOR DISPLAY IN SHOWROOM AND EXTERIOR WALL CONNECTORS	TESLA	
GRAPHICS				
G 406	4' X 6' GRAPHICS W/ FRAME		TESLA	
G 806	8' X 6' GRAPHICS W/ FRAME		TESLA	
G 809	8' X 9' GRAPHICS W/ FRAME		TESLA	
G 812	8' X 12' GRAPHICS W/ FRAME		TESLA	
IT / ELECTRICAL				
E 851	AMPLIFIER	IT ROOM		
E 580	IT RACK APC AR3100SP	23.62"W x 42.13"D x 78.39"H NET SHELTER		
LOUNGE				
F 101	TABLE | SQUARE | WHITE | CHROME | SERVICE LOUNGE	AVE SIX WALL STREET COFFEE TABLE, 28"W x 28"D x 18.5"H	GC	
M 603	9' COFFEE BAR	108" x 22" x 32"	TESLA	
E 131	COFFEE MAKER | COFFEE BAR OR RETAIL OFFICE | WATER RESERVOIR OR HARD WATER LINE	NESPRESSO ZENIUS BRUSS SS + BLACK	TESLA	
E 515	55" SCREEN AND LICENSE | COFFEE BAR	LG	TESLA	1
E 518	55" WALL MOUNT	CHIEF TS325TU FULL MOTION	TESLA	1
F303	CHAIR | BLACK | SQUARE | SERVICE LOUNGE	AVE SIX PACIFIC CHAIR	GC	
F 306	CHAIR | BLACK | MESH BACK		GC	2
RESTROOM				
F843	BABY CHANGINGTABLE | HORIZONTAL	KOALA KARE KB200-SS		
SERVICE AREA				
SE 120	2-POST LIFT	CHALLENGER LE10	TESLA	5
SE 200	SCISSOR LIFT	CHALLENGER DX77	TESLA	5
SE 320	ALIGNMENT SYSTEM, SURFACE MOUNTED	HUNTER RX10KPS	TESLA	1
F 990	WASHBAY CURTAIN	AKON CURTAIN AND DIVIDER/MINIMUM 15' HIGH/CLEAR TOP WITH 4' HIGH GREY BOTTOM. INSTALL PER MFR RECOMMENDATIONS	GC	2
SE575	COMPRESSOR		TESLA	2
SE 412	WHEEL BAL1ANCER	LOCATE NEXT TO TIRE CHANGER	TESLA	1
SE 400	TIRE CHANGER	HUNTER	TESLA	1
SE 575	AIR COMPRESSOR - 20HP	KAESAR, 208V, SK 20T	TESLA	1
SE 620	FORKLIFT	CPD30-XD2-C, HANGCHA, 43"W x 132"L x 78-164"H 3'-7"W x 11'x6'-6" - 13'-8"H	TESLA	1
SE 621	CHARGER	GREEN 6, FSIP, 15"X x 27"H x 9"D	TESLA	1
SE 902	CALETTE BENCH		TESLA	2
SE 904	TECHNICIAN'S TABLE		TESLA	5
SE 908	CAR PARTS CART	INNOVATIVE TOOLS & TECHNOLOGIES	TESLA	64
M 202	5'-0" DESK	DESK, 60" X 30" ADJUSTABLE; SERVICE OFFICE; SILVERSTAR		3
BS 201	PAINT BOOTH			2
BS 301	PREP BOOTH			2
F 991	WASHBAY CURTAIN	10' HIGH BLACK FLAT MATTE FABRIC POLY STRETCH		2
SE 720	WASHER			1
SE 7XX	ELECTRIC DRYER			1
SE 330	ALIGNMENT SENSOR	HUNTER - HAWKEYE ELITE - HE421 SERIES SENSORS	TESLA	1
P136	SHOP SINK			1
B	SHELF			32
BeT1	TIRE RACK			14
D	SHELF			16
SE 320	ALIGNMENT RACK			1
PS 141	LDU			4
PS 146	BUMPER BOX			3
PS 123	WINDSHIELD RACK			4
PS 142	HV PACK CRATES			7
WALL ASSETS				
M 510	FRAME FOR 49" SCREEN	SILVERSTAR	TESLA	
E 518	WALL MOUNT CHIEEF TS325TU MEDIUM THINSTALL	SUPPORTS 75LBS FULL MOTION	TESLA	

GENERAL NOTES:

1. G.C. TO VERIFY QUANTITIES/COUNT & COORD. W/TESLA

-TO BE DELIVERED BY LL AS PART OF FOH BUILT-OUT

MODULUS ARCHITECTS & LAND USE PLANNING
8220 SAN PEDRO DR NE SUITE 520
ALBUQUERQUE, NEW MEXICO 87113
PHONE (505) 338-1499
FAX (505) 338-1498

STATE OF COLORADO
Stephen Aaron Dunbar
405806
LICENSED ARCHITECT

PROJECT TITLE

TESLA COLLISION CENTER

6951 S. BLACKHAWK ST, ENGLEWOOD, COLORADO 80112

PROJECT MANAGER

DRAWN BY:

ISSUE / REVISION

ISSUE DATE: 02-12-24

SHEET TITLE

FFE & SIGNAGE LEGEND & NOTES

SCALE:

JOB NO. 414063

SHEET NUMBER

A2.02a

CONSTRUCTION DOCUMENTS

COPYRIGHT 2021 MODULUS ARCHITECTS
C:\Users\ctorres.MODULUSARCHITEC\Documents\414063-NA-US-CO-ENGLEWOOD-TESLA-COLLISION CENTER_ctoresZXELP.rvt
2/14/2024 4:16:44 PM
TESLA COLLISION CENTER

LIGHTING LEGEND

INTERIOR LIGHTING		
L142		6" APERTURE DOWNLIGHT LED 2000 LUMENS NYXNC5RD/S935-SS/DUALDIM/MD/CW/EM6
L113		HIGHBAY LED, WITH 0-10V DIMMABLE ELECTRONIC DRIVER. HB-18-W-UNV-L0-CD-10-U
L114		SAME AS L113, ONLY WITH 90 MIN EMERGENCY BATTERY BACK UP. HB-18-W-UNV-L0-EL20W-REMCD-10-U
L133		VAPORTIGHT HIGHBAY LED 16500 LUMENS, 0-10V DIM WITH HOOK AND POWER CORD VWFHBLED150CMVCL50 AC120YHOOK CS205W
L134		SAME AS L133 WITH HOOK, POWER CORD AND 90 MIN EM BATTERY BACKUP VWFHBLED150CMVCL50EM AC120YHOOK CS206W
L153		4' LED STRIP 4200 LUMENS 5000K WITH 0-10V DIMMABLE ELECTRONIC DRIVER GPS4UZDSW4CCT
L154		SAME AS L153, ONLY WITH 90 MIN EMERGENCY BATTERY BACKUP GPS4UZDSW4CCT
F		EMERGENCY LIGHT

MISCELLANEOUS EQUIPMENT	
	MINI DOME SECURITY CAMERA PANORAMIC
	VIDEO CAMERA
	VIDEO CAMERA 180
	VIDEO CAMERA DUAL HEAD
	VIDEO CAMERA 360
	BIGASS FAN- ESSENCE 12'-0" DIA.

CEILING TYPES	
E.S.	EXPOSED STRUCTURE

GENERAL NOTES:

1. PAINT STRUCTURE PT2 W/ DRYFALL PAINT.
2. PROVIDE WHITE LIGHT FIXTURES & SPEAKERS
3. LIGHTING LEGEND FOR REFERENCE ONLY, ELECTRICAL LIGHTING PLAN TAKES PRECEDENT.

KEYED NOTES:

1. CEILING MOUNTED MINI DOME SECURITY CAMERA LOCATION. COORDINATE ALL REQUIREMENTS WITH TESLA'S PM AND CAMERA VENDOR PRIOR TO CONSTRUCTION.
2. EXTERIOR MOUNTED MINI DOME SECURITY CAMERA LOCATION. COORDINATE ALL REQUIREMENTS WITH TESLA'S PM AND CAMERA VENDOR PRIOR TO CONSTRUCTION.
3. ADDITIONAL LIGHTS OVER LIFTS, WASHBAY, ALIGNMENT AND DETAILING RACK.
4. WATER PROOF LIGHT FIXTURE AT WASHBAY.
5. GYP. BD. AT PARTITIONS AROUND BATHROOMS TO EXTEND 5'-0" ABOVE ADJACENT ACT CEILING, TYP.
6. PROVIDE MIN. 80 FC AT WORKBAYS.
7. PROVIDE MIN 50-60 FC AT CIRCULATION AREAS/STORAGE
8. PROVIDE MIN 150 FC IN FRONT OF PREP. BOOTH
9. MIN 15'-0" CLEAR OVER BOOTH, VERIFY WITH VENDOR
10. COORDINATE NEW HVLS FANS WITH EXISTING FIRE ALARM AND SPRINKLER SYSTEM. FANS MUST BE CENTERED BETWEEN THE ADJACENT 4 SPRINKLER HEADS AND TIED INTO THE FIRE ALARM TO SHUT OFF IN THE EVENT OF WATERFLOW ACTIVATION. ALL HVLS FANS TO BE INTERLOCKED TO SHUT DOWN IMMEDIATELY UPON A WATERFLOW ALARM. WHERE THE BUILDING IS PROTECTED WITH A FIRE ALARM SYSTEM, THIS INTERLOCK SHALL BE IN ACCORDANCE WITHE REQUIREMENTS OF NFPA 72.

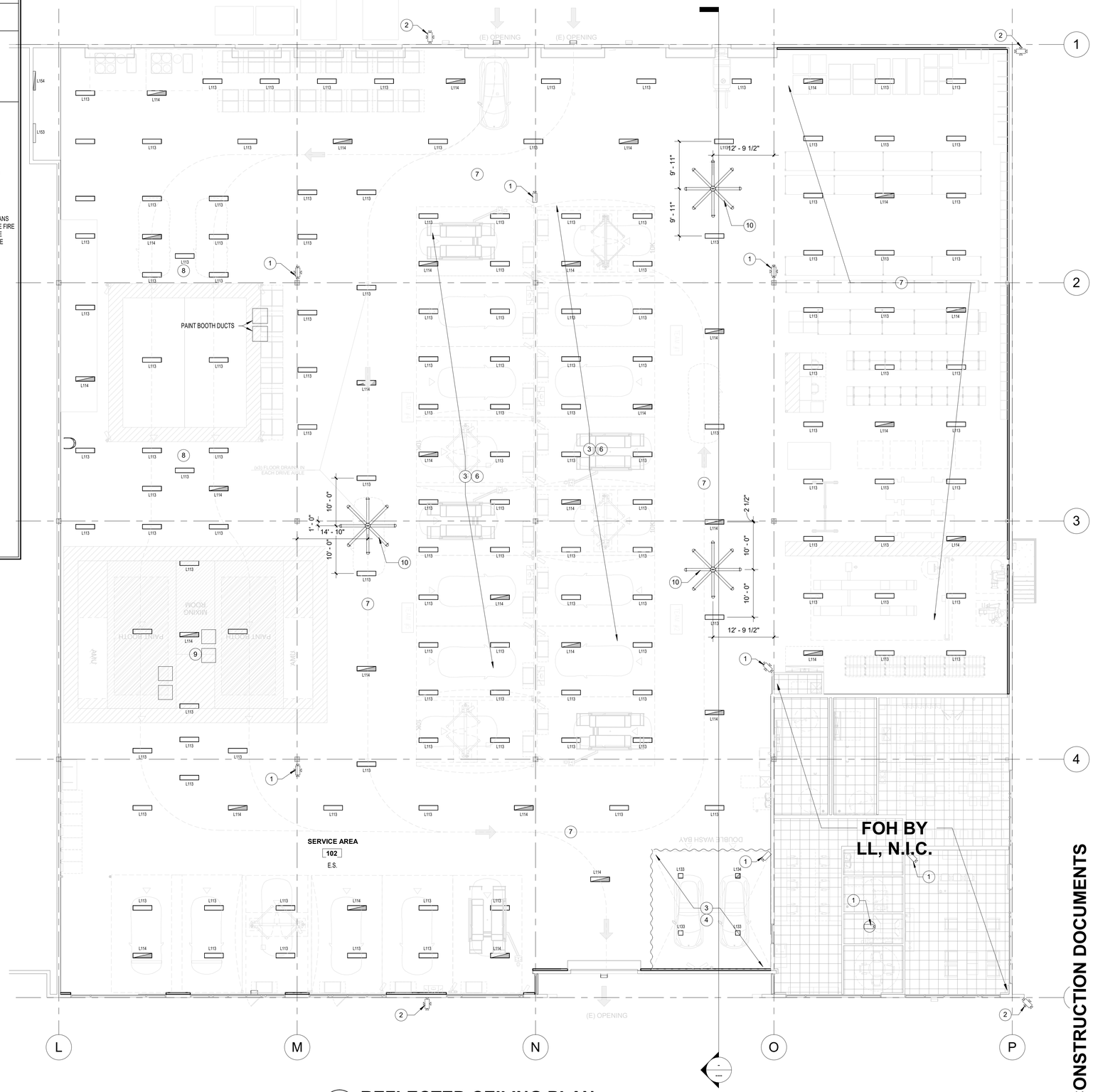

1 REFLECTED CEILING PLAN
SCALE: 3/32" = 1'-0"

MODULUS ARCHITECTS & LAND USE PLANNING
8220 SAN PEDRO DR NE SUITE 520
ALBUQUERQUE, NEW MEXICO 87113
PHONE (505) 338-1499
FAX (505) 338-1498

STATE OF COLORADO
Stephen Aaron Dunbar
405806
LICENSED ARCHITECT

PROJECT TITLE

TESLA COLLISION CENTER

6951 S. BLACKHAWK ST, ENGLEWOOD, COLORADO 80112

PROJECT MANAGER

DRAWN BY:

ISSUE / REVISION

ISSUE DATE: 02-12-24

SHEET TITLE

REFLECTED CEILING PLAN

SCALE:

JOB NO. 414063

SHEET NUMBER

A3.01

CONSTRUCTION DOCUMENTS

COPYRIGHT 2021 MODULUS ARCHITECTS
C:\Users\ctorres.MODULUSARCHITEC\Documents\414063-NA-US-CO-ENGLEWOOD-TESLA-COLLISION CENTER_ctorresZXELP.rvt
2/14/2024 4:16:47 PM
TESLA COLLISION CENTER

COPYRIGHT 2021 MODULUS ARCHITECTS
2/14/2024 4:16:47 PM C:\Users\ctorres.MODULUSARCHITEC\Documents\414063-NA-US-CO-ENGLEWOOD-TESLA-COLLISION CENTER_ctoresZXELP.rvt

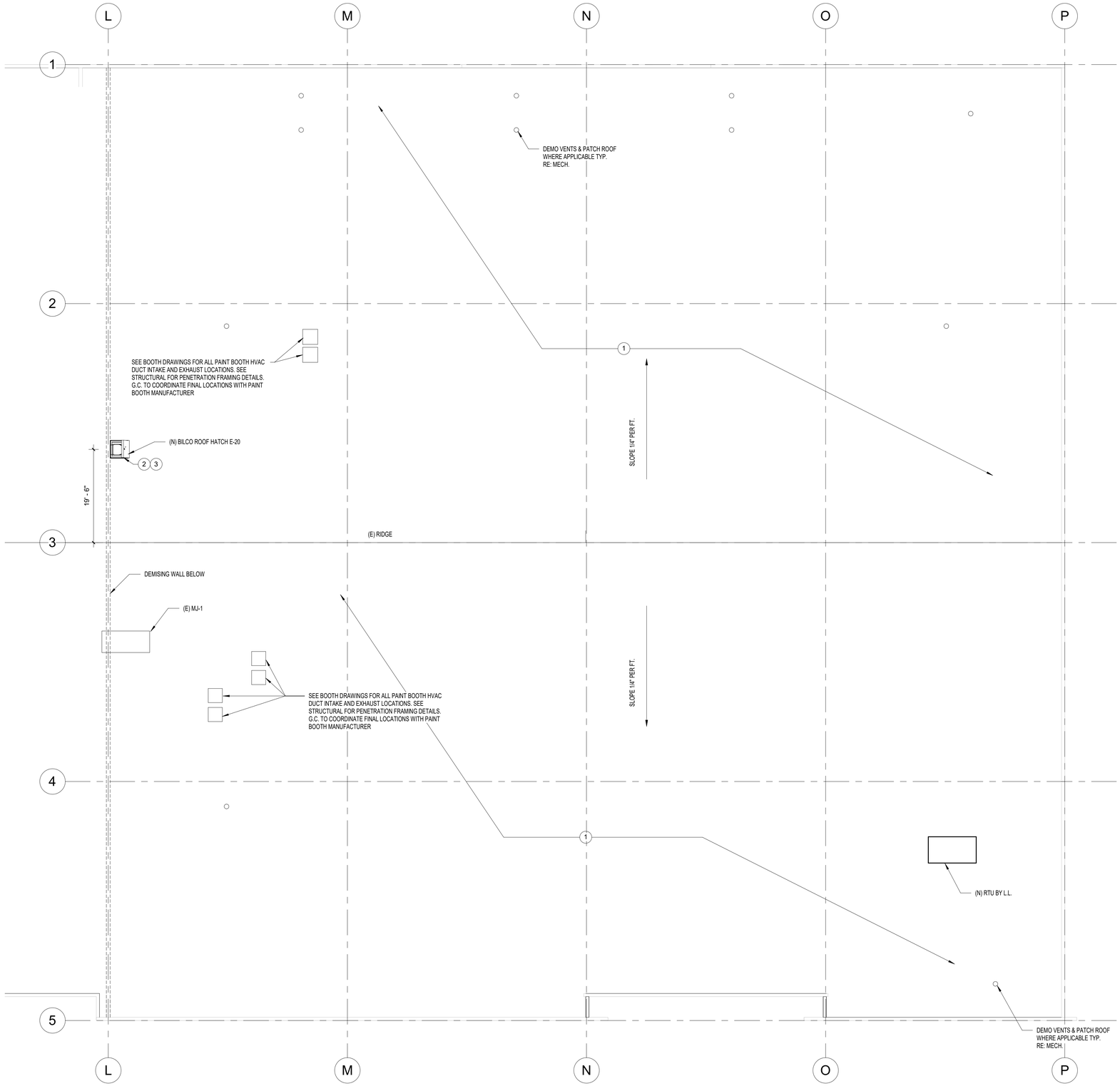

1 ROOF PLAN

SCALE: **3/32" = 1'-0"**

KEY NOTES

1. EXISTING ROOF
2. ROOF HATCH
3. PROVIDE LADDER UP SAFETY POST

MODULUS ARCHITECTS & LAND USE PLANNING
8220 SAN PEDRO DR NE SUITE 520
ALBUQUERQUE, NEW MEXICO 87113
PHONE (505) 338-1499
FAX (505) 338-1498

STATE OF COLORADO
Stephen Aaron Dunbar
405806
LICENSED ARCHITECT

PROJECT TITLE

TESLA COLLISION CENTER

6951 S. BLACKHAWK ST, ENGLEWOOD, COLORADO 80112

PROJECT MANAGER

DRAWN BY:

ISSUE / REVISION

ISSUE DATE: 02-12-24

SHEET TITLE

ROOF PLAN

SCALE:

JOB NO. 414063

SHEET NUMBER

A4.00

CONSTRUCTION DOCUMENTS

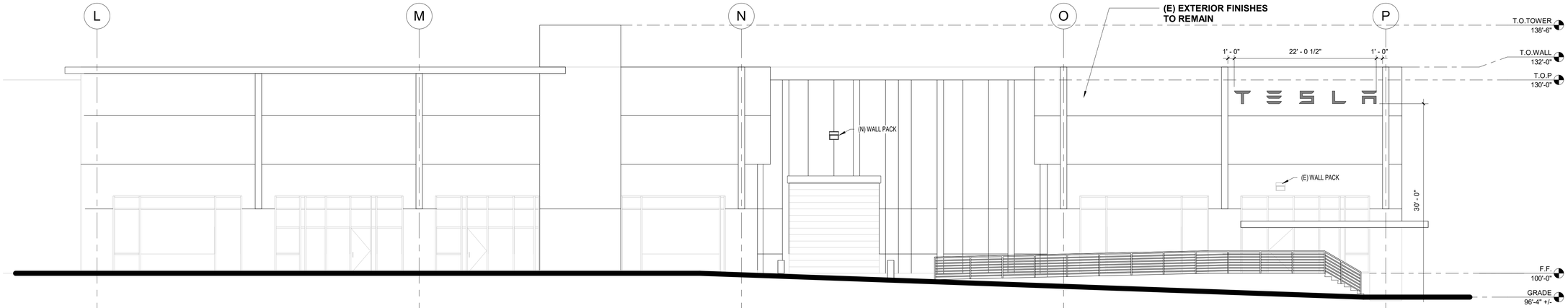

1 SOUTH ELEVATION

SCALE: **1/8" = 1'-0"**

KEY NOTE:

1. BENJAMIN MOORE THUNDER CLOUD GRAY BM 2124-40, SOFT GLOSS/SATIN SEMI GLOSS

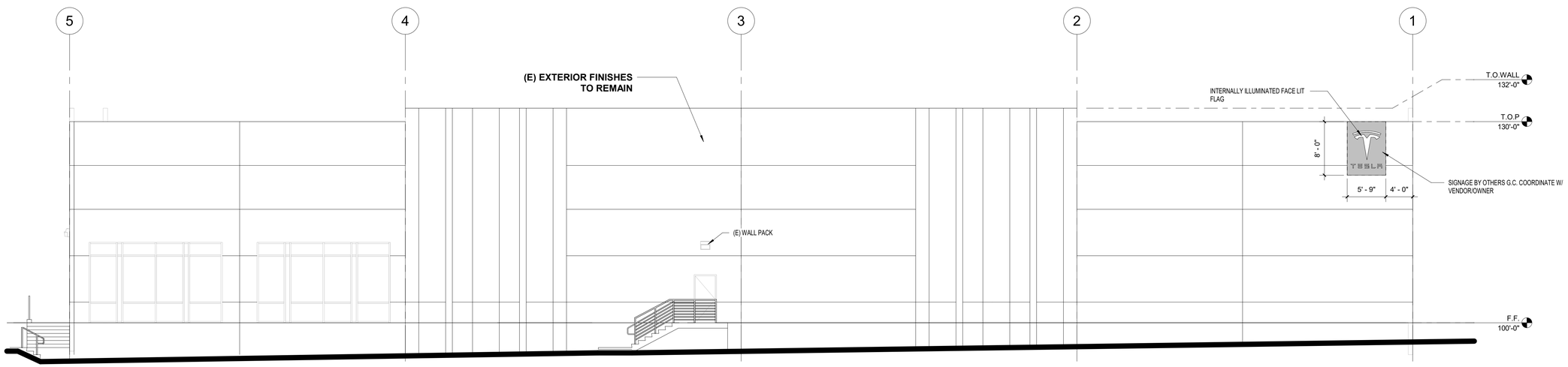

2 EAST ELEVATION

SCALE: **1/8" = 1'-0"**

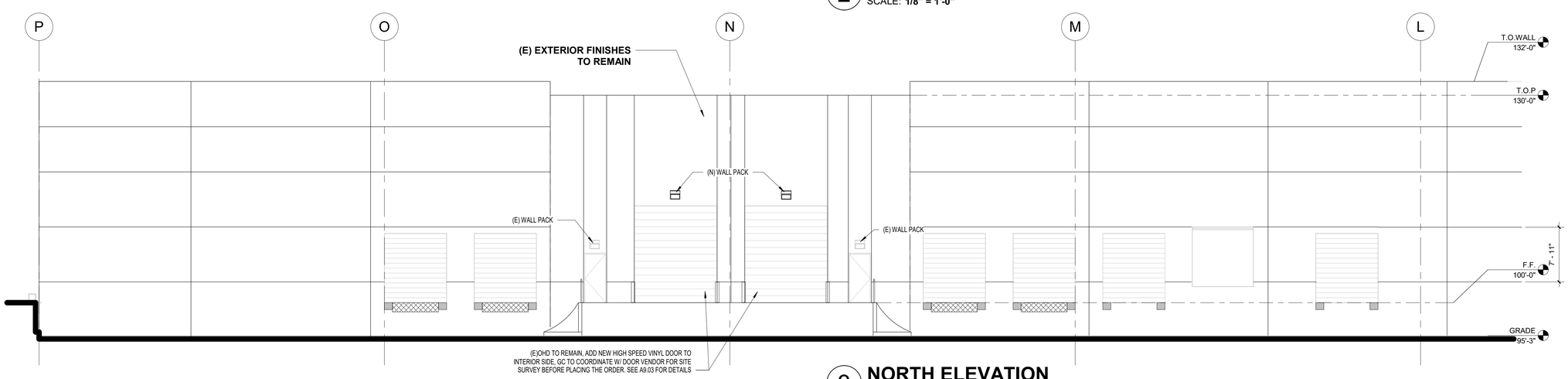

3 NORTH ELEVATION

SCALE: **1/8" = 1'-0"**

MODULUS ARCHITECTS & LAND USE PLANNING
8220 SAN PEDRO DR NE SUITE 520
ALBUQUERQUE, NEW MEXICO 87113
PHONE (505) 338-1499
FAX (505) 338-1498

STATE OF COLORADO
Stephen Aaron Dunbar
405806
LICENSED ARCHITECT

PROJECT TITLE

TESLA COLLISION CENTER

6951 S. BLACKHAWK ST, ENGLEWOOD, COLORADO 80112

PROJECT MANAGER

DRAWN BY:

ISSUE / REVISION

ISSUE DATE: 02-12-24

SHEET TITLE

EXTERIOR ELEVATIONS

SCALE:

JOB NO. 414063

SHEET NUMBER

A4.01a

CONSTRUCTION DOCUMENTS

COPYRIGHT 2021 MODULUS ARCHITECTS
C:\Users\ctorres.MODULUSARCHITEC\Documents\414063-NA-US-CO-ENGLEWOOD-TESLA-COLLISION CENTER_ctoresZXELP.rvt
2/14/2024 4:16:49 PM
TESLA COLLISION CENTER

COPYRIGHT 2021 MODULUS ARCHITECTS
C:\Users\dtorres.MODULUSARCHITE\Documents\414063-NA-US-CO-ENGLEWOOD-TESLA-COLLISION CENTER_dtoresZXELP.rvt
2/14/2024 4:17:01 PM

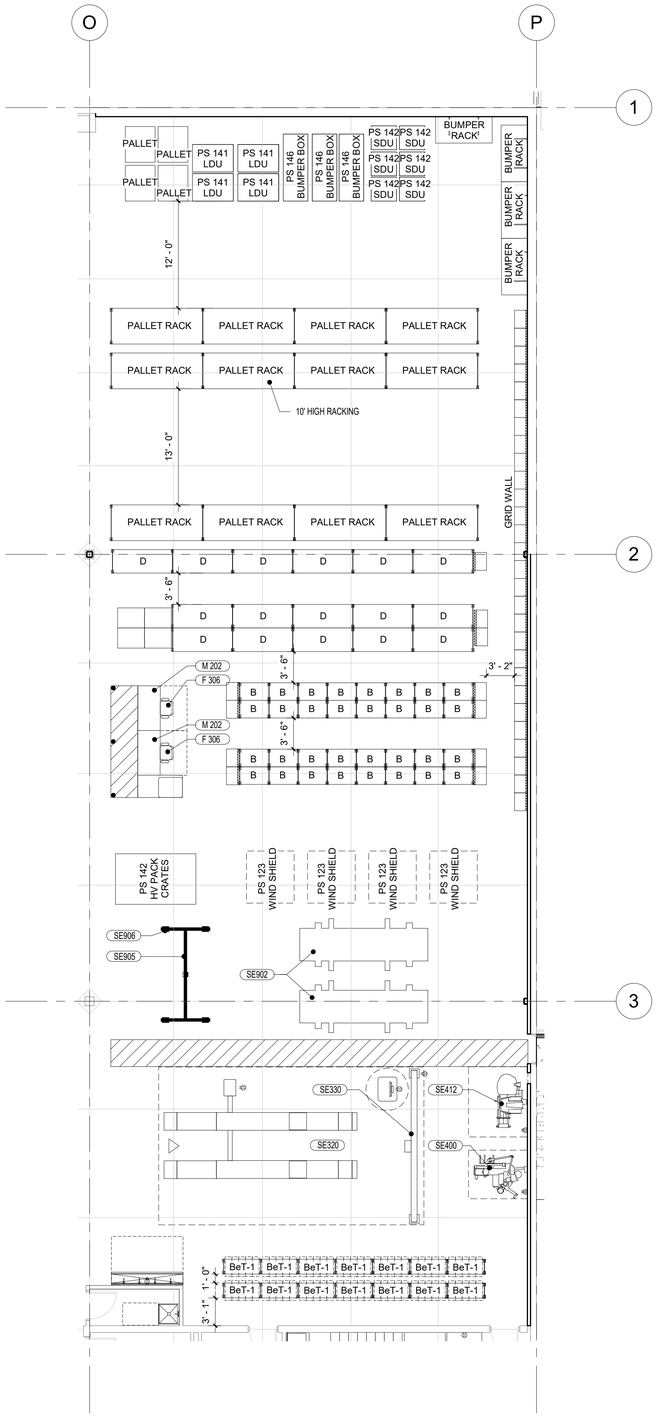

4 ENLARGED F.F.E & SIGNAGE PLAN
SCALE: 1/8" = 1'-0"

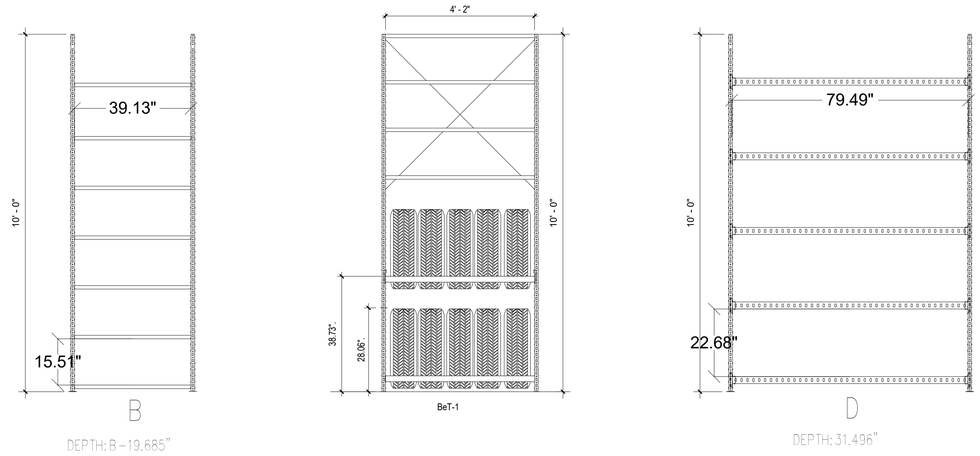

2 RACKS TYPES
SCALE: 1/2" = 1'-0"

NOTES:

1. PARTS & STORAGE LAYOUT VARIES PER PROJECT, VERIFY WITH TESLA DM. NEED FOR STRUCTURAL DETAILS WILL VARY BY JURISDICTION, AOR TO CONFIRM NEEDS PER PROJECT.
2. CODE REQ'D MIN. AISLE WIDTHS MAY VARY, AOR TO CONFIRM PER PROJECT.
3. PARTS AND STORAGE SHELVING AND RACKING FURNISHED BY TESLA, INSTALLED BY G.C.
4. CONTRACTOR TO ASSEMBLE AND ANCHOR DOWN PALLET RACKING AND SHELVING PER PLANS.
5. CONTRACTOR MUST MAINTAIN SHELVING LOCATIONS PER PLANS TO REMAIN IN COMPLIANCE WITH FIRE MARSHAL AND SPRINKLER PLANS.

MODULUS ARCHITECTS & LAND USE PLANNING
8220 SAN PEDRO DR NE SUITE 520
ALBUQUERQUE, NEW MEXICO 87113
PHONE (505) 338-1499
FAX (505) 338-1498

STATE OF COLORADO
Stephen Aaron Dunbar
405806
LICENSED ARCHITECT

AOR/SOR TO QUALIFY THE CORRECT SIZE AND NUMBER OF ANCHORS FOR EACH UNIT.

SCHAEFER INCLUDES ANCHORS WITH EACH BAY THAT IS ORDERED FOR TESLA. HILTI ANCHOR 3/8" X 3"L.
MOST INSTALLATIONS ONLY REQUIRE 1 ANCHOR IN EACH FOOTPLATE DRILLED IN TO CONCRETE AND ATTACHED WITH THE ABOVE SIZE ANCHOR.

A, B, C AND D BAYS HAVE A CAPACITY OF 10,000 LBS. FOR THE ENTIRE UNIT.
EACH SHELF FOR THE A, B AND C BAYS WILL HOLD UP TO 1000 LBS. EVENLY DISTRIBUTED ACROSS THE ENTIRE SHELF.
EACH D BAY SHELF WILL HOLD 550 LBS.

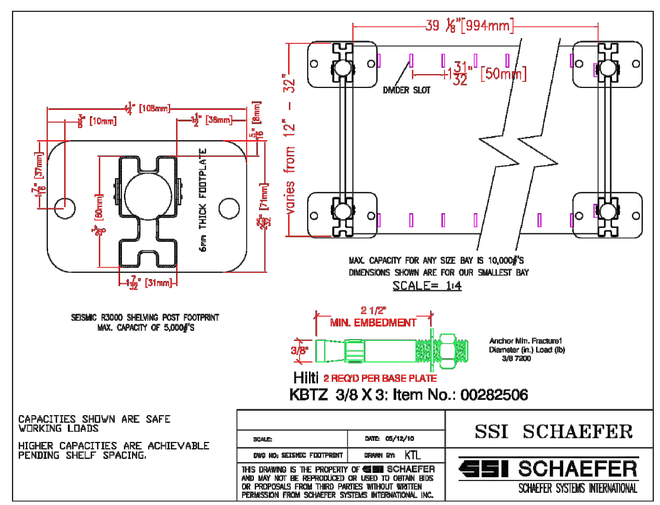

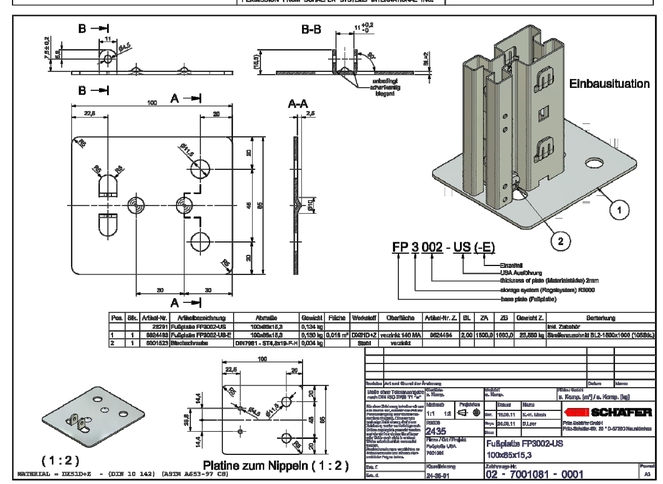

1 10'-0" HEIGHT SHELVING ATTACHMENTS
SCALE: 1" = 1'-0"

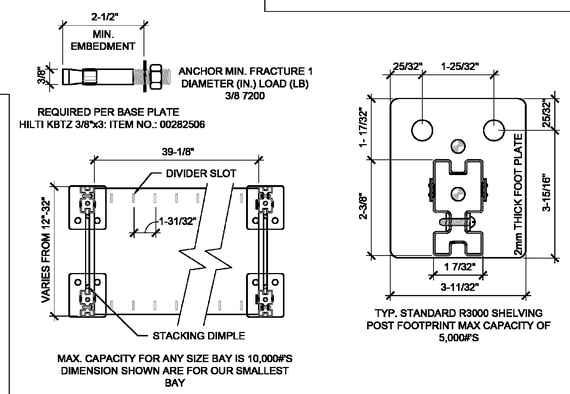

3 SHELVING ATTACHMENT
SCALE: 1" = 1'-0"

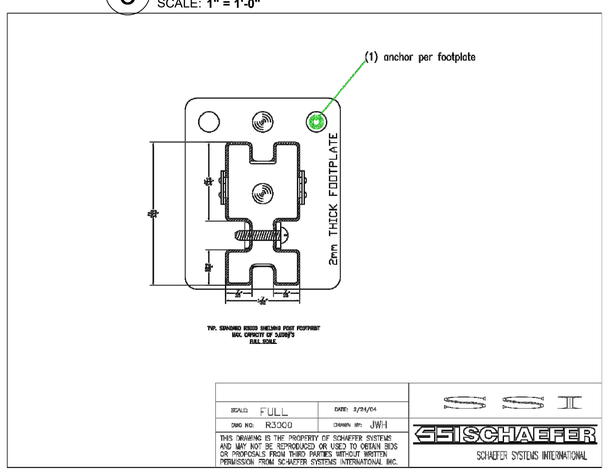

AOR/SOR TO QUALIFY THE CORRECT SIZE AND NUMBER OF ANCHORS FOR EACH UNIT.

SCHAEFER INCLUDES ANCHORS WITH EACH BAY THAT IS ORDERED FOR TESLA. HILTI ANCHOR 3/8" X 3"L.
MOST INSTALLATIONS ONLY REQUIRE 1 ANCHOR IN EACH FOOTPLATE DRILLED IN TO CONCRETE AND ATTACHED WITH THE ABOVE SIZE ANCHOR.

A, B, C AND D BAYS HAVE A CAPACITY OF 10,000 LBS. FOR THE ENTIRE UNIT.
EACH SHELF FOR THE A, B AND C BAYS WILL HOLD UP TO 1000 LBS. EVENLY DISTRIBUTED ACROSS THE ENTIRE SHELF.
EACH D BAY SHELF WILL HOLD 550 LBS.

CONSTRUCTION DOCUMENTS

PROJECT TITLE

TESLA COLLISION CENTER

6951 S. BLACKHAWK ST, ENGLEWOOD, COLORADO 80112

PROJECT MANAGER

DRAWN BY:

ISSUE / REVISION

ISSUE DATE: 02-12-24

SHEET TITLE

PARTS & STORAGE SHELVING

SCALE:

JOB NO. 414063

SHEET NUMBER

A5.00

TESLA COLLISION CENTER

COPYRIGHT 2021 MODULUS ARCHITECTS
C:\Users\ctorres.MODULUSARCHITEC\Documents\414063-NA-US-CO-ENGLEWOOD-TESLA-COLLISION CENTER_ctorresZXELP.rvt
2/14/2024 4:17:02 PM
TESLA COLLISION CENTER

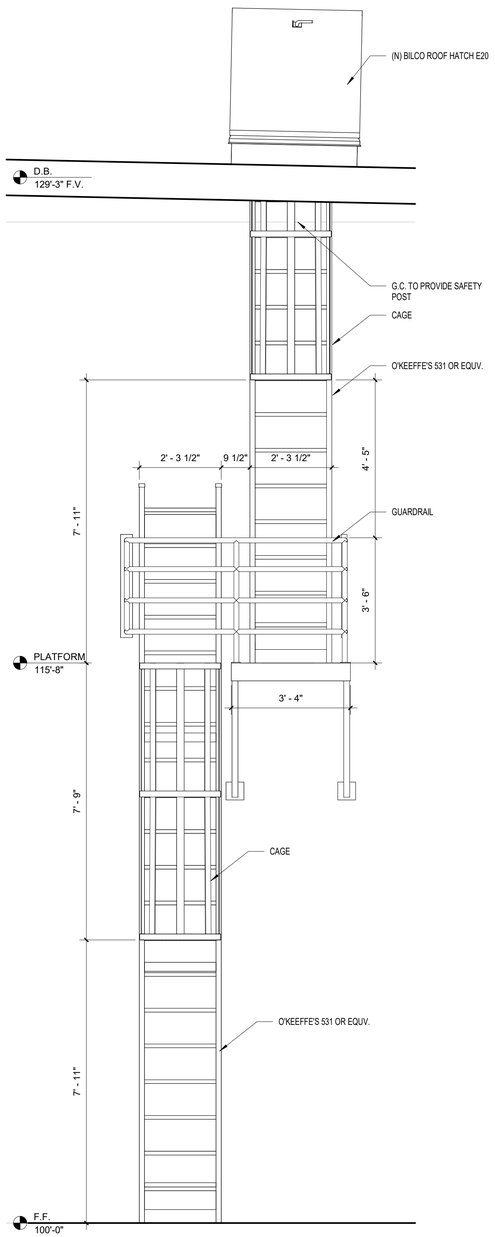

1 ROOF ACCESS LADDER
SCALE: **1/2" = 1'-0"**

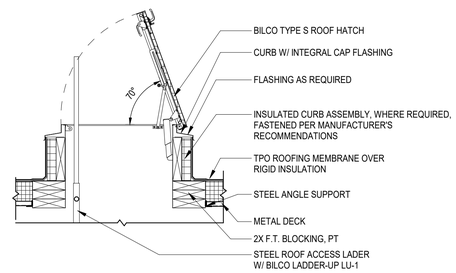

5 ROOF HATCH
SCALE: **1/2" = 1'-0"**

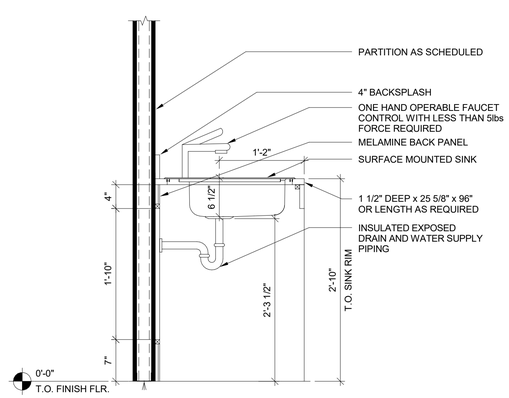

2 SECTION AT BREAKROOM SINK
SCALE: **1" = 1'-0"**

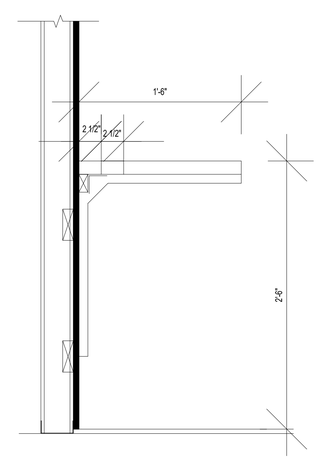

3 BREAK ROOM COUNTER
SCALE: **1 1/2" = 1'-0"**

MODULUS ARCHITECTS & LAND USE PLANNING
8220 SAN PEDRO DR NE SUITE 520
ALBUQUERQUE, NEW MEXICO 87113
PHONE (505) 338-1499
FAX (505) 338-1498

STATE OF COLORADO
Stephen Aaron Dunbar
405806
LICENSED ARCHITECT

PROJECT TITLE

TESLA COLLISION CENTER

6951 S. BLACKHAWK ST, ENGLEWOOD, COLORADO 80112

PROJECT MANAGER

DRAWN BY:

ISSUE / REVISION

ISSUE DATE: 02-12-24

SHEET TITLE

INTERIOR ELEVATION DETAILS

SCALE:

JOB NO. 414063

SHEET NUMBER

A5.03

CONSTRUCTION DOCUMENTS

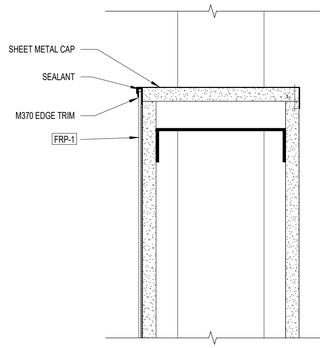

FRP VERTICAL TOP EDGE DETAIL | SCALE: NTS | 12

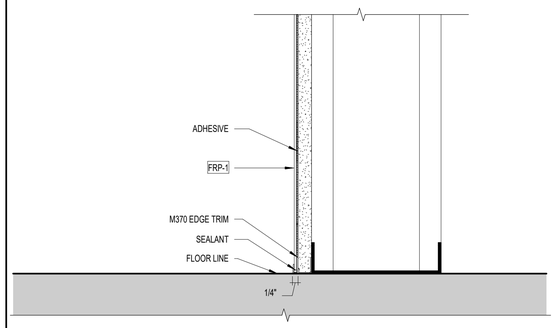

FRP VERTICAL BOTTOM EDGE DETAIL | SCALE: NTS | 7

NOT USED | SCALE: 1/2"=1'-0" | 3

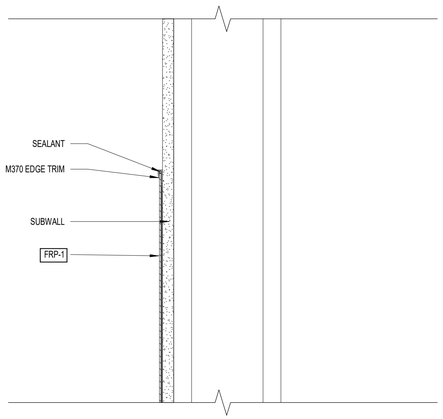

FRP VERTICAL TOP EDGE DETAIL | SCALE: 1"=1'-0" | 5

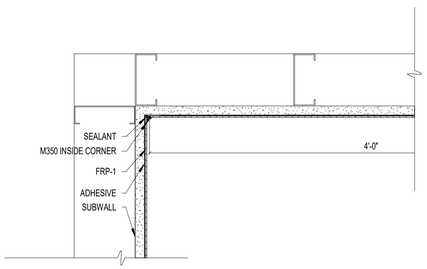

FRP INSIDE CORNER DETAIL | SCALE: NTS | 8

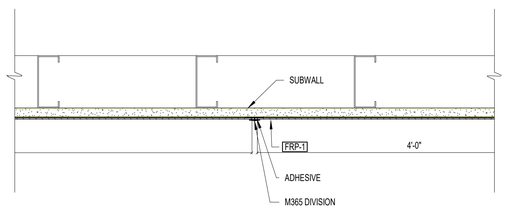

FRP MID DETAIL | SCALE: NTS | 5

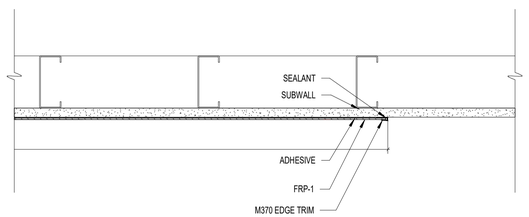

FRP END EDGE DETAIL | SCALE: NTS | 2

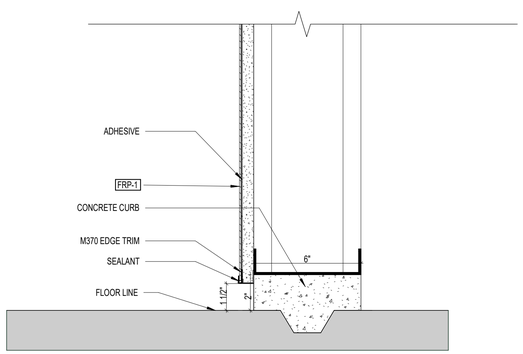

FRP VERTICAL BOTTOM EDGE DETAIL | SCALE: 1/2"=1'-0" | 10

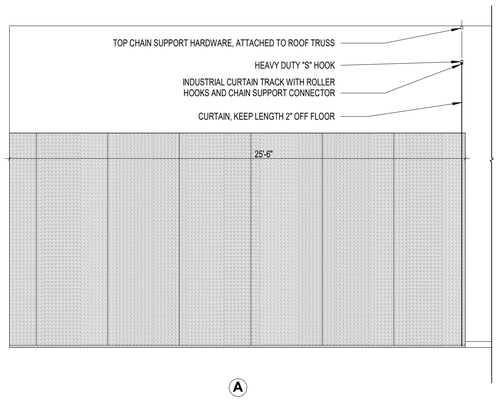

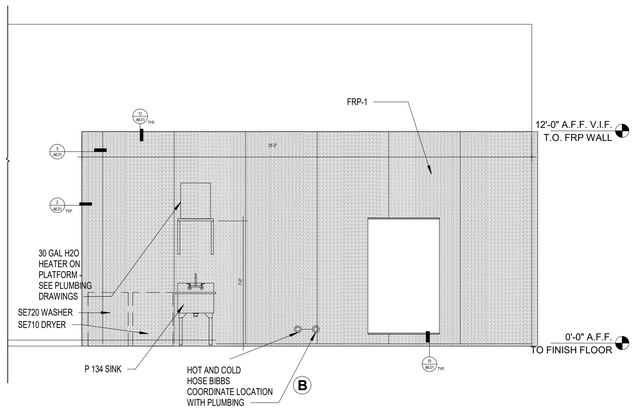

INTERIOR ELEVATION AT WASH BAY | SCALE: 1/4"=1'-0" | 1

CONSTRUCTION DOCUMENTS

COPYRIGHT 2021 MODULUS ARCHITECTS
C:\Users\ctorres.MODULUSARCHITEC\Documents\414063-NA-US-CO-ENGLEWOOD-TESLA-COLLISION CENTER_ctoresZXELP.rvt
2/14/2024 4:17:04 PM
TESLA COLLISION CENTER

MODULUS ARCHITECTS & LAND USE PLANNING
8220 SAN PEDRO DR NE SUITE 520
ALBUQUERQUE, NEW MEXICO 87113
PHONE (505) 338-1499
FAX (505) 338-1498

STATE OF COLORADO
Stephen Aaron Dunbar
405806
LICENSED ARCHITECT

PROJECT TITLE

TESLA COLLISION CENTER

6951 S. BLACKHAWK ST, ENGLEWOOD, COLORADO 80112

PROJECT MANAGER

DRAWN BY:

ISSUE / REVISION

ISSUE DATE: 02-12-24

SHEET TITLE

WASHBAY DETAILS

SCALE:

JOB NO. 414063

SHEET NUMBER

A6.01

RETAIL AND SERVICE TAG	CUSTOMER	EMPLOYEE	DESCRIPTION	BRAND	NORTH AMERICA ITEM #	MOUNTING	FINISH CODE	FINISH	DESCRIPTION
P100		X	**URINAL**	KOHLER	K5452 ETSS 0 K5016 ETSS 0	WALL	0	WHITE VITREOUS CHINA	DEXTER SIPHONE JET WALL MOUNT .125GPF URINAL WITH TOP SPUD, ADA RIM AT +17" AFF
P101		X	**URINAL FLUSHOMETER**	KOHLER	K-40UH00D20-CP K-40UH00G20-CP K-40UH00K20-CP	TOP	CP	POLISHED CHROME	PRIME MANUAL FLUSHOMETER VALVE FOR .125 GPF WASHDOWN URINAL. USE MAX GPF ALLOWED PER CODE
P105	X	X	**TOILET - FLOOR MOUNTED**	KOHLER	K-96057-SS-0	FLOOR	0	WHITE VITREOUS CHINA	HIGHCLIFF ULTRA 1.0 GPF, 1.1 GPF, 1.28 GPF, OR 1.6 GPF DEPENDING FLUSHOMETER SPECIFIED. 10" OR 12" ROUGHIN.
P107	X	X	**TOILET LID**	KOHLER	K-4731-SA-0	TOP	0	WHITE	STRONGHOLD COMMERCIAL HEAVY DUTY TOILET SEAT ELONGATED, OPEN FRONT
P108	X	X	**TOILET FLUSHOMETER**	KOHLER	K-40TH00N10-CP, 00K10-CP, 00R10-CP, 00V10-CP	TOP	CP	POLISHED CHROME	MANUAL 1.28 GPF WC FLUSHOMETER
P112	X	X	**18" GRAB BAR**	BOBRICK	B5806 X 18	SURFACE	304	SATIN SS	1 1/4" DIAMETER STAINLESS STEEL GRAP BARS WITH SNAP FLANGE
P113	X	X	**36" GRAB BAR**	BOBRICK	B5806 X 36	SURFACE	304	SATIN SS	1 1/4" DIAMETER STAINLESS STEEL GRAP BARS WITH SNAP FLANGE
P114	X	X	**42" GRAB BAR**	BOBRICK	B5806 X 42	SURFACE	304	SATIN SS	1 1/4" DIAMETER STAINLESS STEEL GRAP BARS WITH SNAP FLANGE
P115	X	X	**TOILET TISSUE DISPENSER**	BOBRICK	B686	SURFACE	304	BRIGHT POLISHED SS	DOUBLE ROLL
P116		X	TOILET SEAT COVER DISPENSER	BOBRICK		SURFACE		SATIN SS	
P117		X	**MIRROR**	BOBRICK	B165 1836	SURFACE			18"X36" 48MMX91MM
P120		X	**TOILET PARTITION**	BOBRICK	1540 1542 1545	1542 TOILET PARTITIONS - OVERHEAD BRACED 1545 URINAL PARTITIONS - WALL HUNG W/ #1000357 U BRACKETS		SLATE GREY	CLASSIC SERIES 1540 PARTITIONS AND SCREENS WITH HIGH PRESSURE LAMINATE SURFACES AND EDGES. INCLUDES DOOR AND MOUNTING HARDWARE, HINGES, DOOR LATCHES, DOOR KEEPERS, COAT HOOKS AND MOUNTING BRACKETS ARE CONSTRUCTED OF CHROME PLATED ZAMAK. -SELF-CLOSING DOORS - PULLS ON BOTH SIDES OF ADA STALL DOOR -COAT HOOK IN STALLS, TWO @ ADA STALL DOOR
P121	X	X	**TOILET TISSUE DISPENSER**	BOBRICK	B6977	RECESSED	6977	SATIN SS	DOUBLE ROLL WITHOUT HOOD
P122	X	X	**PAPER TOWEL 600 C FOLD DISPENSER | RECEPTACLE 6.3 GAL 24L OR 6" WALL**	BOBRICK	B3803	FULLY RECESSED	304	SATIN SS	PREFERRED. TRIMLINE SERIES RECESSED PAPER TOWEL DISPENSER/WASTE RECEPTACLE
P123		X	RECESSED CONVERTIBLE PAPER TOWEL 600 C FOLD DISPENSER | 12 GAL	BOBRICK	B3944	SEMI RECESSED	306	SATIN SS	CLASSIC PAPER TOWEL DISPENSER AND WASTE RECEPTACLE INTERCHANGABLE, 368-60 18 GAL
P125	X	-	**HAT AND COAT HOOK**	BOBRICK	B6527	SURFACE	304	SATIN SS	TWO HOOKS (ONE HIGH, ONE LOW) ON THE BACK OF PARTITION DOOR. MOUNT AT 48" MAX A.F.F.
P126	X	X	**SOAP DISPENSER**	BOBRICK	B818615	WALL	304	SATIN SS	CONTURA
P127		X	**LAVATORY SINK**	AMERICAN STANDARD	321075.02	WALL	020	WHITE	DECLYN WALL MOUNT SINK, REAR OVERFLOW, SOAP DEPRESSION, FAUCET LEDGE, FAUCET HOLES ON 4" CENTERS, HOLES FOR CONCEALED ARM SUPPORT
P128		X	**CONCEALED ARMS SINK SUPPORT**						
P129		X	**FAUCET TWO HANDLE**	AMERICAN STANDARD	**5502170.002**	TOP	CP	POLISHED CHROME	MONTERREY 4" TWO HANDLE CENTERSET LAVATORY FAUCET WITH CONVENTIONAL SPOUT. .5PGM/1.5L/MIN PRESSURE COMPENSATING AERATOR. VANDAL RESISTANT WRIST BLADE HANDLES. WITH GRID STRAINER DRAIN

RETAIL AND SERVICE TAG	CUSTOMER	EMPLOYEE	DESCRIPTION	BRAND	NORTH AMERICA ITEM #	MOUNTING	FINISH CODE	FINISH	DESCRIPTION
P140	X	X	**5" SQUARE FLOOR DRAIN**	ZURN	**FD-2321-ST-CP**	TILE		CHROME PLATED	LOW PROFILE FINISHED AREA FLOOR DRAIN. CAST IRON BODY. FURNISH TRAP PRIMER CONNECTION. CHROME PLATED STRAINER.
P146	X	X	**HOSE BIBB**	CHICAGO FAUCET	387	WALL		CHROME PLATED	
P147	X	X	**PIPE INSULATION**	TRU BRO	102EZ	-		WHITE	
P148	X		MIRROR	PORCELANOSA	N806070857-100042621	SURFACE		POLISHED BORDER MIRROR	17 11/16" X 35 7/16" V. POLISHED BORDER MIRROR TESLA ACCOUNT REPRESENTATIVE IGNACIO CASTILLO E: ICASTILLO@PORCELANOSA-USA.COM
P149	X		SINK	PORCELANOSA	100090018-N377001040	WALL		WHITE	SQUARE WALL MOUNT SINK 31 1/2" X 17 11/16" TESLA ACCOUNT REPRESENTATIVE IGNACIO CASTILLO E: ICASTILLO@PORCELANOSA-USA.COM
P150	X		AUTOMATIC FAUCET BASE UNIT	AMERICAN STANDARD	250B.102.002				FLOW RATE: 1.5 GPM
P151	X		AC POWER KIT	AMERICAN STANDARD	PKOO.HAC				HARDWIRED AC POWER KIT
P156	X		**PAPER TOWEL DISPENSER**	BOBRICK	B38032	SEMI RECESSED	304	SATIN SS	TRIMLINE SEMI RECESSED CONVERTIBLE PAPER TOWEL DISPENSER AND WASTE RECEPTACLE.
P160	X	X	TOILET SEAT COVER DISPENSER	BOBRICK	B-370	RECESSED		SATIN SS	
P161		X	FEMININE PRODUCTS WASTE RECEPTACLE - THRU PARTITION	BOBRICK	B-270	THRU PARTITION	304	SATIN SS	1/2 GAL PLASTIC RECEPTACLE. C2-SIDED THROUGH PARTITION
P162		X	FEMININE PRODUCTS WASTE RECEPTACLE	BOBRICK	B-35-15	SURFACE			
P164		X	FEMININE PRODUCTS WASTE RECEPTACLE	BOBRICK	B-254	SURFACE	304	SATIN SS	1/2 GAL PLASTIC RECEPTACLE
P166	X	X	HI LO DRINKING FOUNTAIN WITH BOTTLE FILLER, REFRIGERATED, FILTERED	ELKAY	LZSTL8WSLK	-		-	ELKAY EZH2O BOTTLE FILLING STATION & VERSATILE BI-LEVEL ADA COOLER FILTERED REFRIGERATED LIGHT GRAY HTTPS://WWW.ELKAY.COM/PRODUCTS/DETAILS/LZSTL8WSLK
P171		X	**PAPER TOWEL DISPENSER - ROLL**	BOBRICK	B72860	SURFACE	304	SATIN SS	"TOUCH FREE" PULL TOWEL MECHANISM. LOCKING CABINET WITH REMOVABLE AND PERMANENT KEYS
P172		X	**WASTE RECEPTACLE | 20 GAL**	BOBRICK	B275	SURFACE	304	SATIN SS	HOOKS HOLD FURNISHED REUASABLE VINYL LINER. REMOVABLE FOR SERVICING.
P177			THREE STATION ADA WALL MOUNTED SINK WITH TUBULAR SUPPORT	ADVANCE TABCO	FS-WM-60EFADA				Kit Includes: - (1) K-6.3 ;" DRAIN, (1) K-06 SPLASH MOUNT FAUCET MOUNTING KIT, (3) K-175 SINGLE HOLE 4" ELECTRONIC FAUCET, (1) K-411 STRAINER PLATE, (1) K-449 5" BACKSPLASH MODIFICATION, (2) ADJUSTABLE STAINLESS STEEL FLANGED BULLET FOOT
P178			**FOUR STATION ADA WALL MOUNTED SINK WITH TUBULAR SUPPORT**	ADVANCE TABCO	FS-WM-80EFADA				KIT INCLUDES: - (1) K-6.3 ;" DRAIN, (1) K-06 SPLASH MOUNT FAUCET MOUNTING KIT, (4) K-175 SINGLE HOLE 3" ELECTRONIC FAUCET, (1) K-411 STRAINER PLATE, (1) K-449 5" BACKSPLASH MODIFICATION, (2) ADJUSTABLE STAINLESS STEEL FLANGED BULLET FOOT

-TO BE DELIVERED BY LL AS PART OF FOH BUILT-OUT

NOTE:
FIXTURES IN ALL RESTROOMS ARE TO BE COMMERCIAL GRADE.

NOTE:
FIXTURE SCHEDULE ON THIS SHEET IS TO BE COORDINATED WITH PLUMBING ENGINEER AND PLUMBING SHEET P4.00 TO ENSURE SAME FIXTURES ARE CALLED OUT ON BOTH SETS OF DRAWINGS

PLUMBING FIXTURE SCHEDULE | SCALE: | 1

COPYRIGHT 2021 MODULUS ARCHITECTS
C:\Users\ctorres.MODULUSARCHITE\Documents\414063-NA-US-CO-ENGLEWOOD-TESLA-COLLISION CENTER_ctorresZXELP.rvt
2/14/2024 4:17:04 PM
TESLA COLLISION CENTER

MODULUS ARCHITECTS & LAND USE PLANNING
8220 SAN PEDRO DR NE SUITE 520
ALBUQUERQUE, NEW MEXICO 87113
PHONE (505) 338-1499
FAX (505) 338-1498

STATE OF COLORADO
Stephen Aaron Dunbar
405806
LICENSED ARCHITECT

PROJECT TITLE

TESLA COLLISION CENTER

6951 S. BLACKHAWK ST, ENGLEWOOD, COLORADO 80112

PROJECT MANAGER

DRAWN BY:

ISSUE / REVISION

ISSUE DATE: 02-12-24

SHEET TITLE

PLUMBING FIXTURE SCHEDULE

SCALE:

JOB NO. 414063

SHEET NUMBER

A6.02

CONSTRUCTION DOCUMENTS

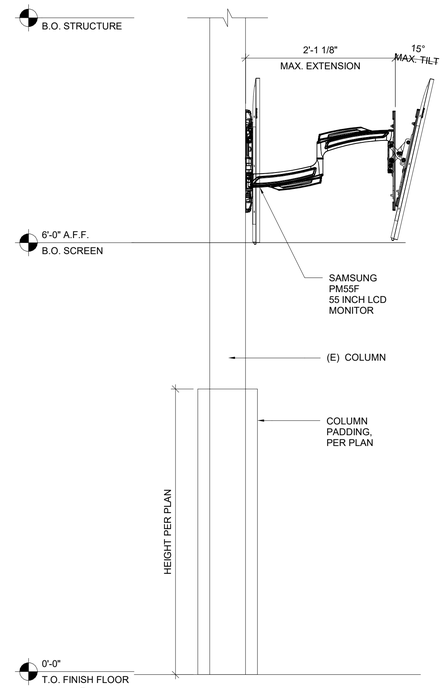

5 COLUMN MOUNTED MONITOR SECTION

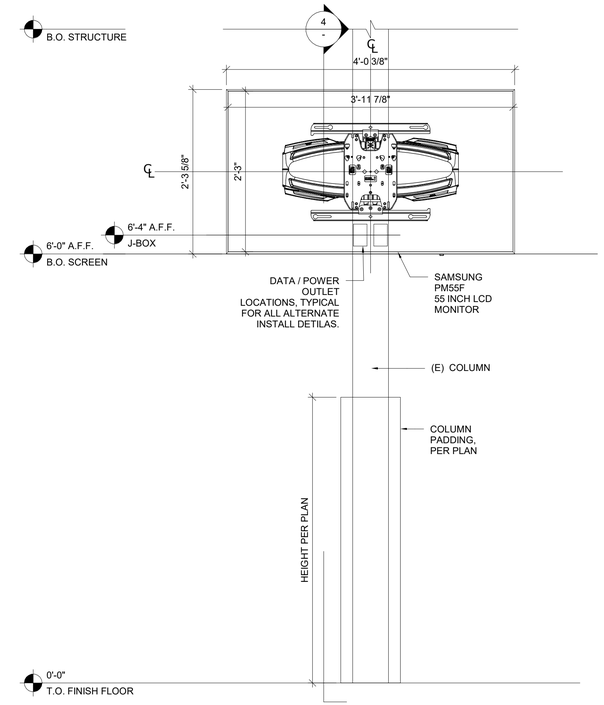

2 COLUMN MOUNTED MONITOR DETAIL

MODULUS
ARCHITECTS &
LAND USE PLANNING
8220 SAN PEDRO DR NE SUITE 520
ALBUQUERQUE, NEW MEXICO 87113
PHONE (505) 338-1499
FAX (505) 338-1498

STATE OF COLORADO
Stephen
Aaron Dunbar
405806
LICENSED ARCHITECT

PROJECT TITLE

TESLA COLLISION CENTER

6951 S. BLACKHAWK
ST, ENGLEWOOD,
COLORADO 80112

PROJECT MANAGER

DRAWN BY:

ISSUE / REVISION

ISSUE DATE: 02-12-24

SHEET TITLE

SERVICE MOTION MONITOR MOUNTING SECTIONS & DETAILS

SCALE:

JOB NO. 414063

SHEET NUMBER

A7.05

CONSTRUCTION DOCUMENTS

COPYRIGHT 2021 MODULUS ARCHITECTS
C:\Users\ctorres.MODULUSARCHITEC\Documents\414063-NA-US-CO-ENGLEWOOD-TESLA-COLLISION CENTER_ctorresZXELP.rvt
2/14/2024 4:17:05 PM
TESLA COLLISION CENTER

COPYRIGHT 2021 MODULUS ARCHITECTS
C:\Users\ctorres.MODULUSARCHITEC\Documents\414063-NA-US-CO-ENGLEWOOD-TESLA-COLLISION CENTER_ctoresZXELP.rvt
2/14/2024 4:17:06 PM
TESLA COLLISION CENTER

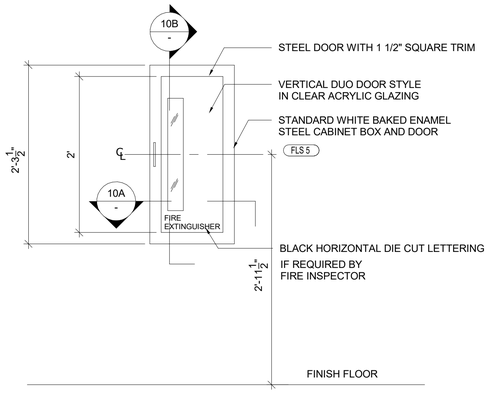

C ELEVATION

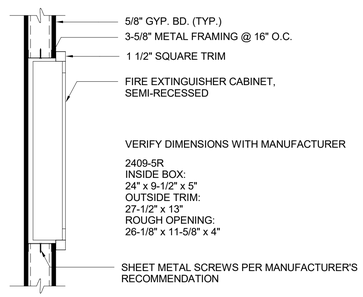

B SECTION

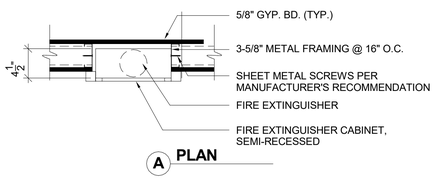

A PLAN

FIRE EXTINGUISHER CABINET | SCALE: 1"=1'-0" | 5

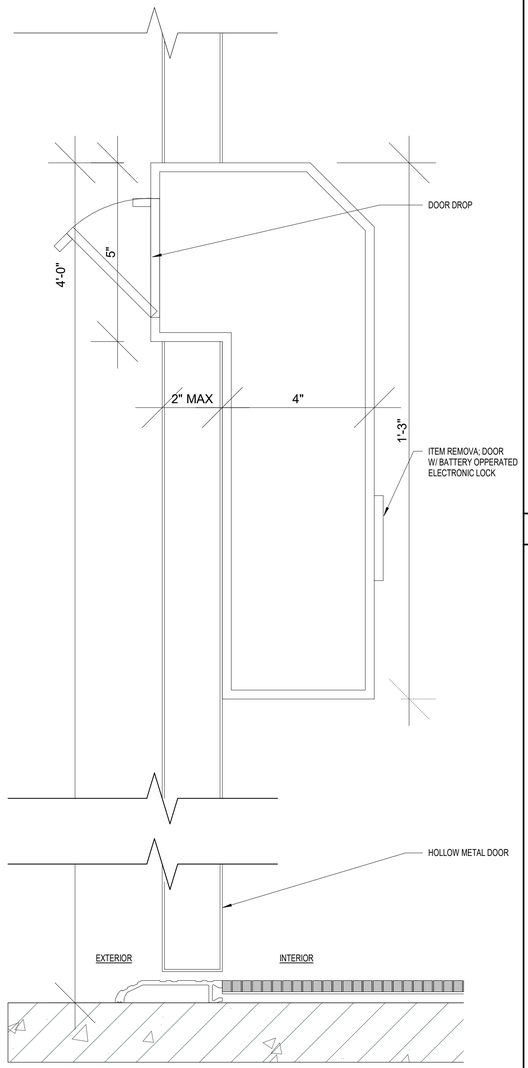

DOOR MTD. KEY DROP BOX DETAIL | SCALE: 6"=1'-0" | 8

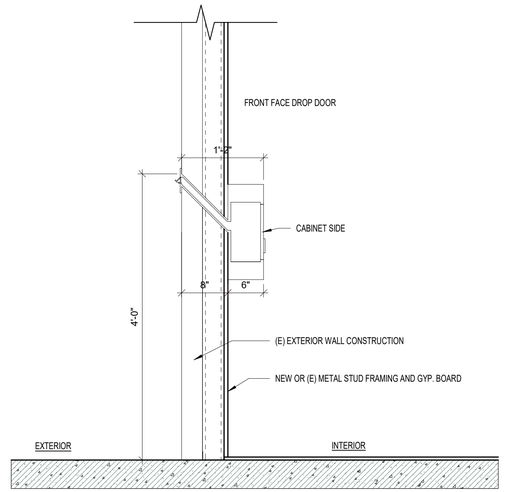

THRU-WALL KEY BOX DETAIL | SCALE: 1"=1'-0" | 6

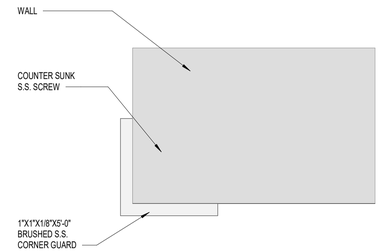

CORNER GUARD DETAIL | SCALE: 1'-0"=1'-0" | 3

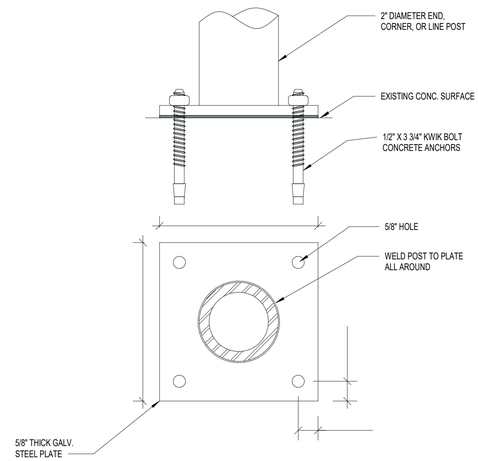

INTERIOR FENCE MOUNTING DETAIL | SCALE: 6"=1'-0" | 5

NOT USED | SCALE: | 2

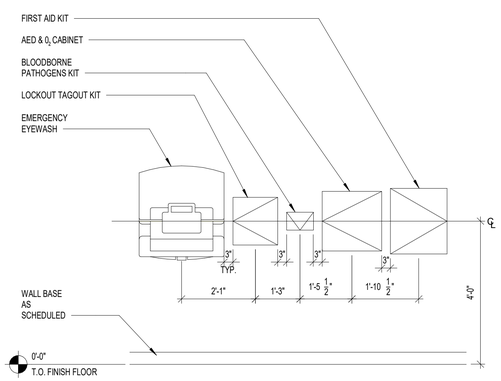

ELEVATION AT LIFE SAFETY | SCALE: 1/2"=1'-0" | 10

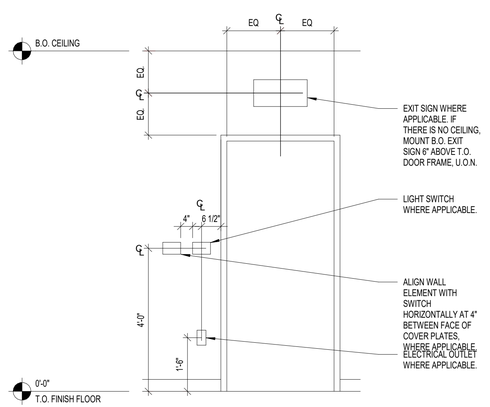

TYP.EQUIPMENT LAYOUT AT DOORS | SCALE: 1/2"=1'-0" | 7

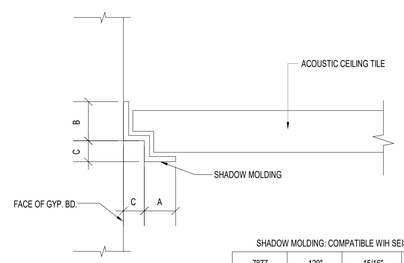

SHADOW MOLDING: HEMMED WITH PREFINISHED EXPOSED FLANGES

ITEM # REVEAL	LENGTH	(A) FLANGE	(B) HEIGHT	(C)
7823	120"	2"	7/8"	3/4"
7871	120"	3/4"	15/16"	3/4"
7875	120"	3/4"	15/16"	1/2"
7873	120"	9/16"	15/16"	3/8"
7874	120"	9/16"	15/16"	1/4"

SHADOW MOLDING: COMPATIBLE WIH SEISMIC RX AND BERC 2

7877	120"	15/16"	15/16"	1/4"
7878	120"	15/16"	15/16"	3/8"
7897	120"	15/16"	15/16"	1/2"
7874IC	INSIDE CORNER FOR 7874 MOLDING			
7874OC	OUTSIDE CORNER FOR 7874 MOLDING			
7861	INSIDE CORNER FOR 7873 MOLDING			
7862	OUTSIDE CORNER FOR 7873 MOLDING			
7877IC	INSIDE CORNER OR 7877 MOLDING			
7877OC	OUTSIDE CORNER OR 7877 MOLDING			
7878IC	INSIDE CONER FOR 7878 MOLDING			
7878OC	OUTSIDE CORNER FOR 7878 MOLDING			

SHADOW GAP DETAIL | SCALE: 6"=1'-0" | 4

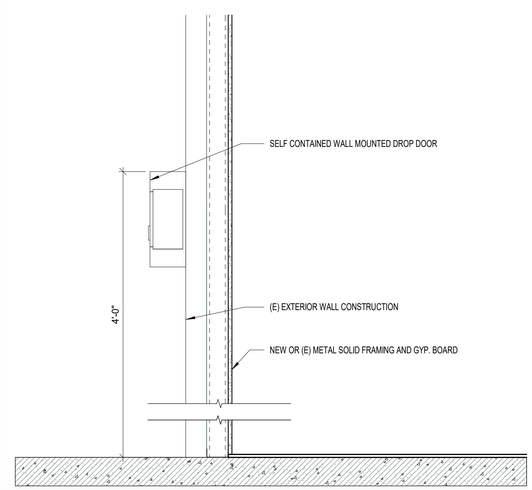

WALL MTD. KEY DROP BOX DETAIL | SCALE: 1"=1'-0" | 1

CONSTRUCTION DOCUMENTS

MODULUS ARCHITECTS & LAND USE PLANNING
8220 SAN PEDRO DR NE SUITE 520
ALBUQUERQUE, NEW MEXICO 87113
PHONE (505) 338-1499
FAX (505) 338-1498

STATE OF COLORADO
Stephen Aaron Dunbar
405806
LICENSED ARCHITECT

PROJECT TITLE

TESLA COLLISION CENTER

6951 S. BLACKHAWK
ST, ENGLEWOOD,
COLORADO 80112

PROJECT MANAGER

DRAWN BY:

ISSUE / REVISION

ISSUE DATE: 02-12-24

SHEET TITLE

INTERIOR DETAILS

SCALE:

JOB NO. 414063

SHEET NUMBER

A8.01

PARKING SIGNAGE | SCALE: 6"=1'-0" | 9

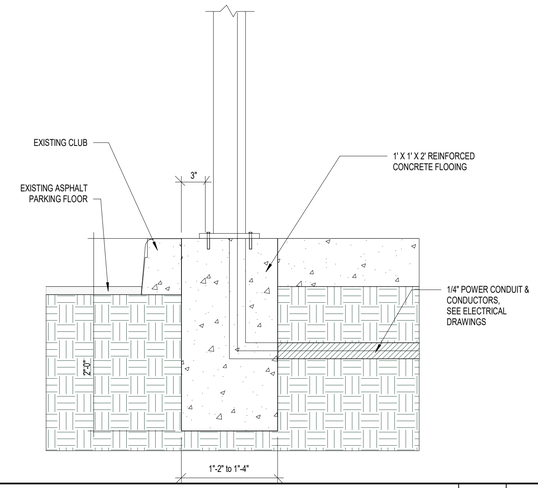

POST MTD. CONNECTOR SECTION | SCALE: 1"=1'-0" | 6

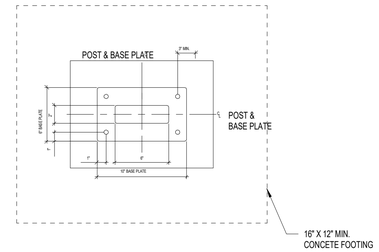

TESLA PEDESTAL BASEDETAIL | SCALE: 1 1/2"=1'-0" | 3

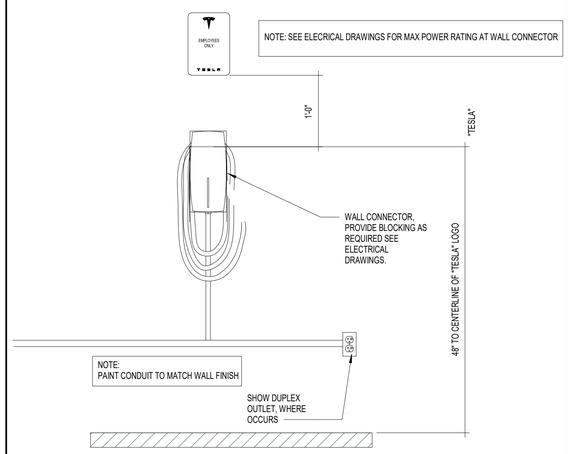

WALL MTD. WALL CONNECTOR DETAIL | SCALE: 1"=1'-0" | 8

FIRE EXTINGUISHER CABINET | SCALE: 1"=1'-0" | 5

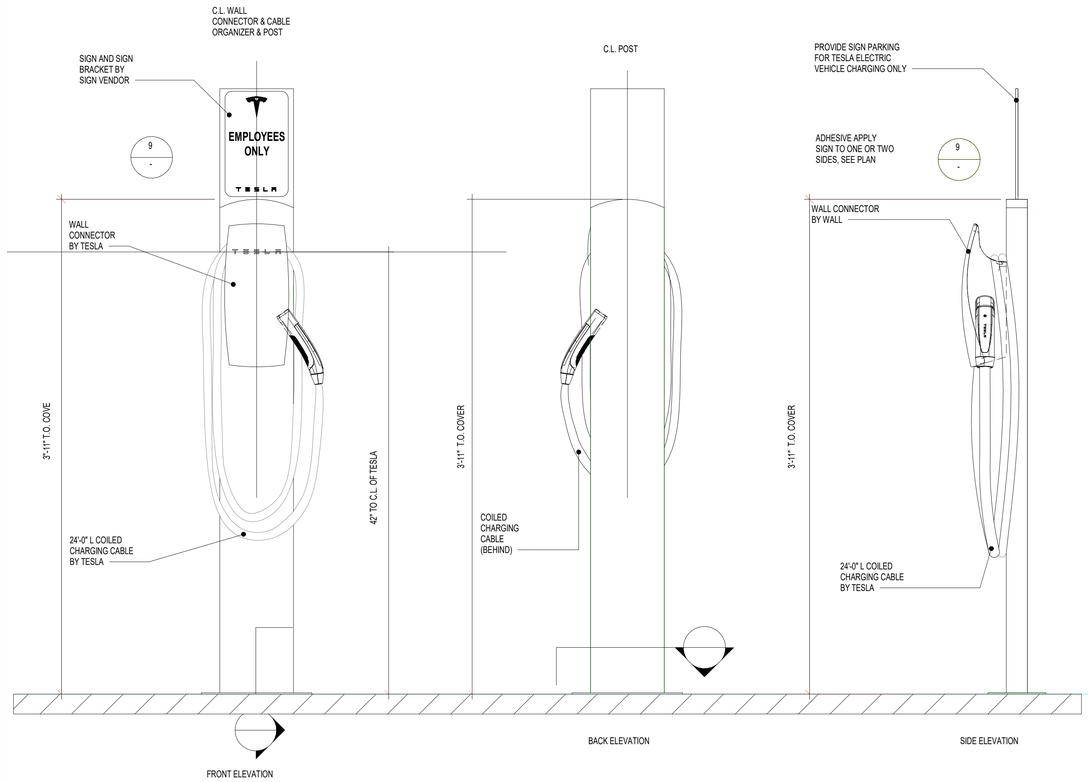

TESLA PEDESTAL POST MOUNTED CONNECTOR DETAILS | SCALE: 1 1/2"=1'-0" | 1

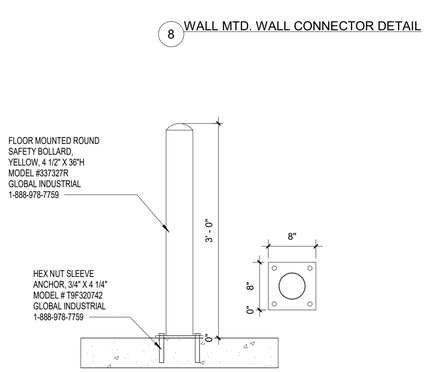

BOLLARD DETAIL | SCALE: 1"=1'-0" | 10

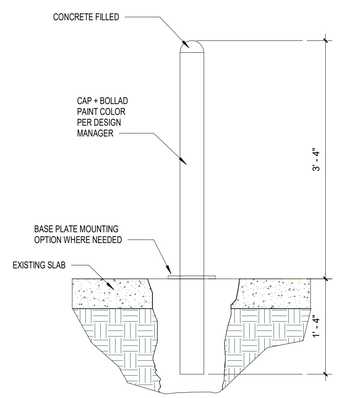

BOLLARD DETAIL | SCALE: 1"=1'-0" | 7

COPYRIGHT 2021 MODULUS ARCHITECTS
C:\Users\ctorres.MODULUSARCHITE\Documents\414063-NA-US-CO-ENGLEWOOD-TESLA-COLLISION CENTER_ctoresZXELP.rvt
2/14/2024 4:17:07 PM
TESLA COLLISION CENTER

CONSTRUCTION DOCUMENTS

MODULUS ARCHITECTS & LAND USE PLANNING
8220 SAN PEDRO DR NE SUITE 520
ALBUQUERQUE, NEW MEXICO 87113
PHONE (505) 338-1499
FAX (505) 338-1498

STATE OF COLORADO
Stephen Aaron Dunbar
405806
LICENSED ARCHITECT

PROJECT TITLE

TESLA COLLISION CENTER

6951 S. BLACKHAWK ST, ENGLEWOOD, COLORADO 80112

PROJECT MANAGER

DRAWN BY:

ISSUE / REVISION

ISSUE DATE: 02-12-24

SHEET TITLE

CHARGING EQUIPMENT DETAILS

SCALE:

JOB NO. 414063

SHEET NUMBER

A8.02

COPYRIGHT 2021 MODULUS ARCHITECTS
C:\Users\dtorres.MODULUSARCHITEC\Documents\414063-NA-US-CO-ENGLEWOOD-TESLA-COLLISION CENTER_dtorresZXELP.rvt
2/14/2024 4:17:08 PM
TESLA COLLISION CENTER

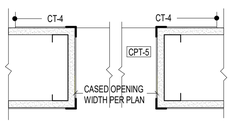

CORNER GUARD DETAIL

SCALE: 1'-0"=1'-0" | 3

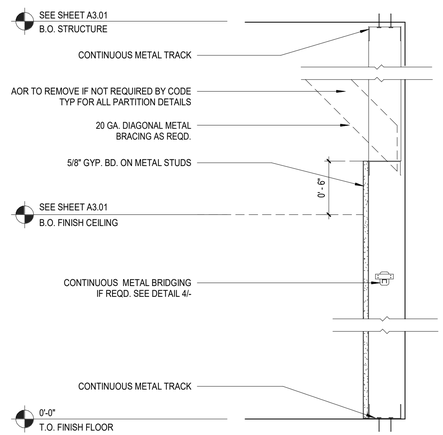

FURRING PARTION - D

SCALE: 1'-1/2"=1'-0" | 8

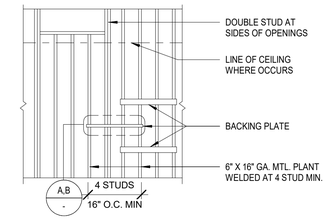

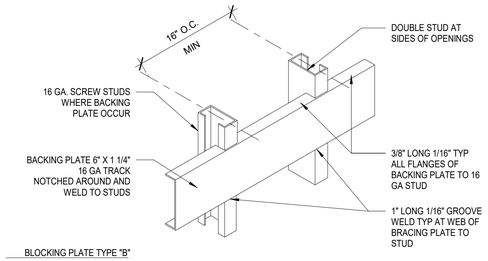

BLOCKING PLATE TYPE "B"

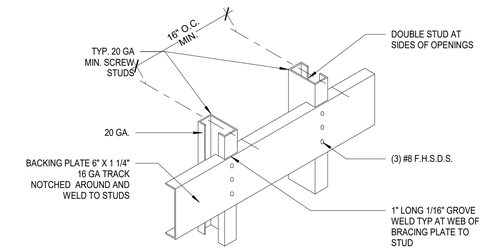

BLOCKING PLATE TYPE "A"

NOTES

1. TYPE "A" BACKING FZE OR MISC. ITEMS, IE. SURFACE MTD. MIRRORS, WASTE RECEPTACLES, TOWEL DISPENSERS, ETC. MAXIMUM WEIGHT - 50 LBS.
2. TYPE "B" BACKING PLATES FOR UPPER WALL HUNG CABINETS (UP TO 2 SHELVES) BASE CABINETS, FULL HEIGHT CABINETS, HANDRAILS, GUARDRAILS, GRAB BARS, WALL HUNG EQUIPMENT, ETC. MAXIMUM WEIGHT - 100 LBS./FT
3. SEE TYPICAL WALL FRAMING FOR GUAGE OF STUDS, VERIFY LENGTH, HEIGHT, LOCATION OF BACKING PLATE, AND NUMBER.
4. REQ'D WITH ACCESSORY MANUFACTURERS. USE #12 SELF TAPPING SHEET METAL SCREWS WHEN ATTACHING ITEMS TO BACKING PLATE.
5. WALL STUD FLANGES ARE CONTINUOUS AT BACKING PLATE.

BLOCKING PLATE DETAILS

SCALE: N.T.S | 3

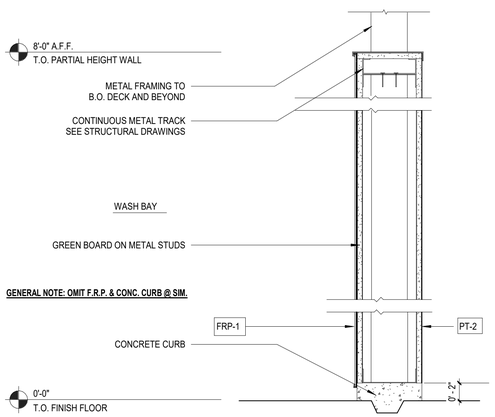

PARTIAL HEIGHT PARTITION

SCALE: 1'-1/2"=1'-0" | 10

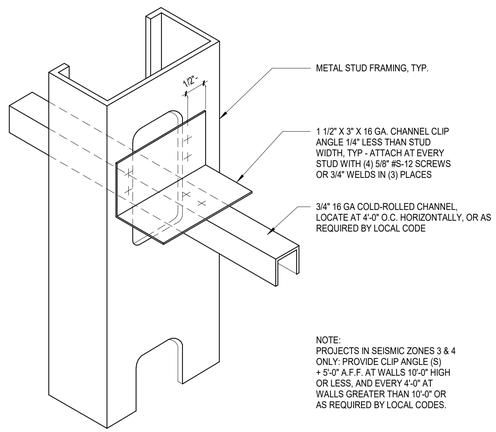

NOTE:
PROJECTS IN SEISMIC ZONES 3 & 4
ONLY: PROVIDE CLIP ANGLE (S)
+ 5'-0" A.F.F. AT WALLS 10'-0" HIGH
OR LESS, AND EVERY 4'-0" AT
WALLS GREATER THAN 10'-0" OR
AS REQUIRED BY LOCAL CODES.

TYPICAL BRIDGING DETAIL

SCALE: 6"=1'-0" | 4

PARTITION TYPE TAG

X##
- FRAMING SIZE
- RATING/HR
- PARTITION TYPE

PARTITION TYPE LEGEND:
SEE PARTITION DETAILS THIS SHEET

RATING LEGEND:
0- NON-RATED PARTITION
1- 1 HOUR RATED PARTITION
2- 2 HOUR RATED PARTITION

FRAMING SIZE LEGEND:
1- 1 5/8" HAT CHANNEL
2- 2 1/2" METAL FRAMING
3- 3 5/8" METAL FRAMING
4- 4" METAL FRAMING
6- 6" METAL FRAMING
8- 8" METAL FRAMING

GENERAL NOTES

1. USE GREENBOARD IN TOILET ROOMS, JANITOR'S CLOSET, DETAILING / WASH BAY, & ALL WET AREAS.
2. VERIFY STUD SIZE, GAUGE AND SPACING WITH MANUFACTURER CALCULATIONS AND SPECIFICATIONS.

PARTITION TYPE LEGEND

SCALE: N.T.S. | 1

CONSTRUCTION DOCUMENTS

MODULUS ARCHITECTS & LAND USE PLANNING
8220 SAN PEDRO DR NE SUITE 520
ALBUQUERQUE, NEW MEXICO 87113
PHONE (505) 338-1499
FAX (505) 338-1498

STATE OF COLORADO
Stephen Aaron Dunbar
405806
LICENSED ARCHITECT

PROJECT TITLE

TESLA COLLISION CENTER

6951 S. BLACKHAWK ST, ENGLEWOOD, COLORADO 80112

PROJECT MANAGER

DRAWN BY:

ISSUE / REVISION

ISSUE DATE: 02-12-24

SHEET TITLE

PARTITION DETAILS

SCALE:

JOB NO. 414063

SHEET NUMBER

A8.03

COPYRIGHT 2021 MODULUS ARCHITECTS
C:\Users\ctorres.MODULUSARCHITE\Documents\414063-NA-US-CO-ENGLEWOOD-TESLA-COLLISION CENTER_ctorresZXELP.rvt
2/14/2024 4:17:09 PM
TESLA COLLISION CENTER

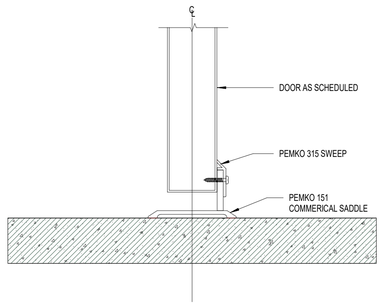

SEALED CONC. EXT. THRESHOLD DTL | SCALE: NTS | 13

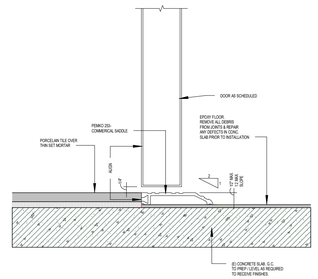

EPOXY-TILE THRESHOLD DETAIL | SCALE: 1"=1'-0" | 9

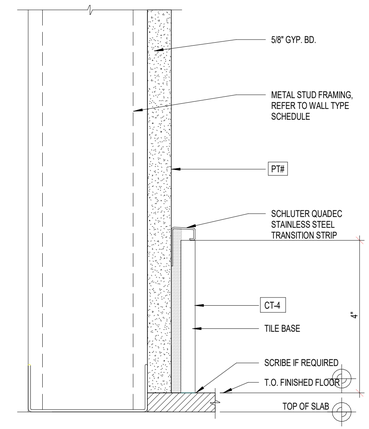

TILE BASE (CT-4) | SCALE: 1"=1'-0" | 6

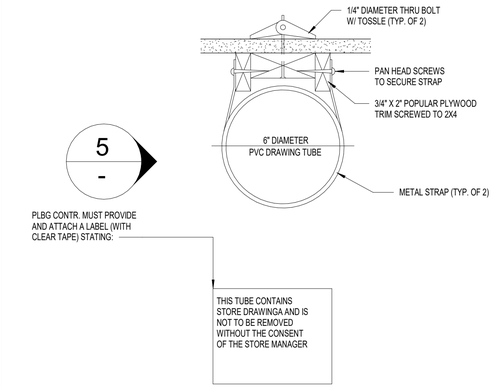

DRAWING TUBE | SCALE: 1"=1'-0" | 3

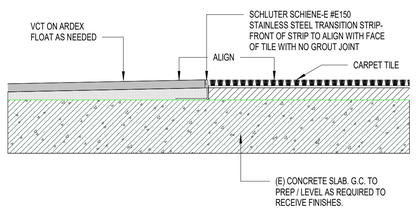

VCT-CARPET TRANSITION DETAIL | SCALE: 1"=1'-0" | 12

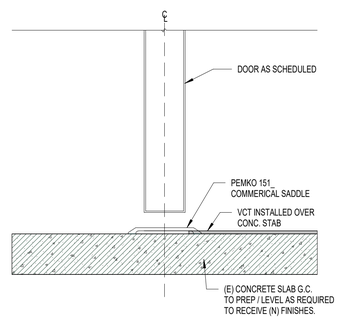

SEALED CONC.-VCT THRESHOLD | SCALE: NTS | 8

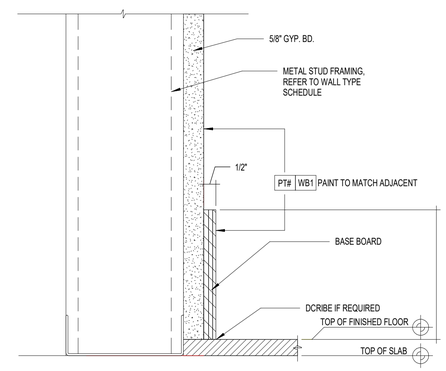

SURFACE MOUNT BASE (WB-1) | SCALE: 1"=1'-0" | 5

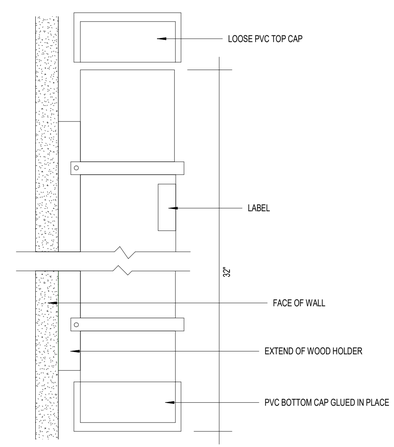

DRAWING TUBE ELEVATION | SCALE: 1"=1'-0" | 2

TILE-CARPET TRANSITION DETAIL | SCALE: 1"=1'-0" | 11

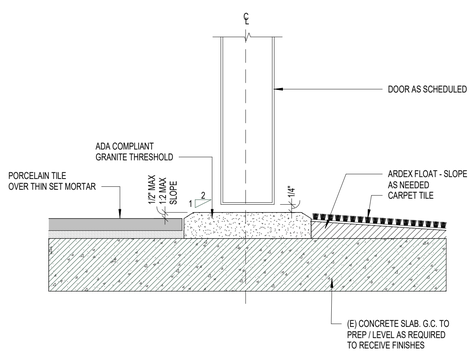

TILE-CARPET THRESHOLD DETAIL | SCALE: 1"=1'-0" | 10

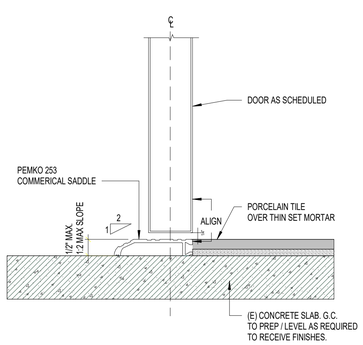

S.C.-TILE THRESHOLD DTL | SCALE: 1"=1'-0" | 7

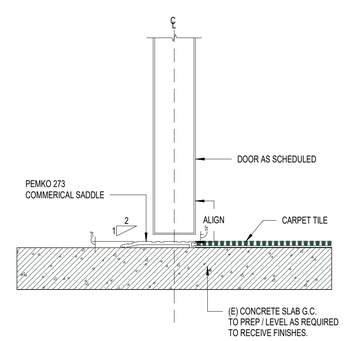

S.C.-CARPET THRESHOLD DTL | SCALE: 1"=1'-0" | 4

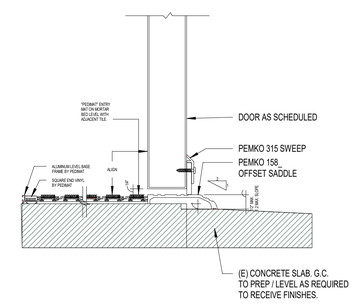

ENTRY MAT-EXTERIOR THRESHOLD DTL | SCALE: 1/4"=1'-0" | 1

CONSTRUCTION DOCUMENTS

MODULUS ARCHITECTS & LAND USE PLANNING
8220 SAN PEDRO DR NE SUITE 520
ALBUQUERQUE, NEW MEXICO 87113
PHONE (505) 338-1499
FAX (505) 338-1498

STATE OF COLORADO
Stephen Aaron Dunbar
405806
LICENSED ARCHITECT

PROJECT TITLE

TESLA COLLISION CENTER

6951 S. BLACKHAWK ST, ENGLEWOOD, COLORADO 80112

PROJECT MANAGER

DRAWN BY:

ISSUE / REVISION

ISSUE DATE: 02-12-24

SHEET TITLE

FLOOR & INTERIOR DETAILS

SCALE:

JOB NO. 414063

SHEET NUMBER

A8.04

FINISH SCHEDULE

PART NO.	ITEM DESCRIPTION	VENDOR	VENDOR ID	FINISH	REMARKS
FLOOR FINISHES					
CT-1	DARK PORCELAIN TILE	LEA CERAMICHE	STYLE: BASALTINA STONE PROJECT COLOR: STUCCATA SIZE: 12" X 24"; BRICK PATTERN	MATTE	FOR CUSTOMER TOILET AREA CONTACT: ELISA BELLUCCI T: 704 806 4134 E: e.bellucci@leausa.us
CT-1G	GROUT 1/16"	CUSTOM BUILDING RODUCTS	#60 CHARCOAL PG6017		-
CT-2	LIGHT PORCELAIN TILE	LEA CERAMICHE	STYLE: BASALTINA STONE PROJECT COLOR: NATURALE SIZE: 12" X 24"; BRICK PATTERN	MATTE	FOR CUSTOMER AREA CONTACT: ELISA BELLUCCI T: 704 806 4134 E: e.bellucci@leausa.us
CT-2G	GROUT 1/16"	CUSTOM BUILDING RODUCTS	#370 DOVE GRAY	-	
CT-4	MEDIUM GRAY TILE	DALTILE	TH97 TESLA GRAY MATTE #N030TS12241PK 12"X24" BRICK PATTERN	-	ALTERNATE FOR CT-1 AND CT-2, TO ORDER CONTACT: NORTH AMERICA: ANGELA BRABEC, TESLA@DALTILE.COM
CT-4G	GROUT	DALTILE	1/8" GROUT JOINT MAIPEI #47 CHARCOAL GRAY	-	USE FOR SHOWROOM AND CUSTOMER FACING RESTROOM FLOORS AND BASE IN RESTROOM. REPLACES CT-1 AND CT-2 LEA CRAMICHE STUCCATA AND NATURALE. TO ORDER CONTACT: NORTH AMERICA: ANGELA BRABEC, TESLA@DALTILE.COM INSTALL PER MANUFACTURER WITH PROVIDED LEVELERS
CP-01	GESSO GLOSS	-	12"X24" STACKED PATTERN	-	-
CT-6	-	SONG KAI	SKHH210429-2	-	ALTERNATE FOR CT-1 DARK GRAY; RESTROOM FLOOR AND BASE
CT-7	-	SONG KAI	SKHH210429-2	-	ALTERNATE FOR CT-2 LIGHT GRAY; SHOWROOM
CT-8	-	SONG KAI	SHWH2104	-	ALTERNATE FOR CT-3 WHITE; RESTROOM WALL TILE
CPT-1	CARPET	TANDUS CENTIVA	YOHJI GRID II 30398 LAQUER 01279 NYLON BROADLOOM 12' ROLL	3/16 GAUGE	LINE PATTERN ON FRONT/ARROWS ON BACK TO RUN PARALLEL WITH STOREFRONT, WHERE OCCURS. CONTACT: LESLIE FONCE 310.962.6937 EMAIL: LESLIE.FONCE@TARKETT.COM
CPT-2	CARPET	TANDUS CENTIVA	YOHJI CARPET TILES SIZE: 2' X 2'	3/16 GAUGE	LINE PATTERN ON FRONT/ARROWS ON BACK TO RUN PARALLEL WITH STOREFRONT, WHERE OCCURS. CONTACT: LESLIE FONCE 310.962.6937 EMAIL: LESLIE.FONCE@TARKETT.COM
CPT-3	HEAVY DUTY CARPET	PEDIMAT	STYLE: M1: LIGHTWEIGHT PET-G TREAD RAILS & ALUMINUM SURFACE RAILS. RECESSED MOUNTED WITH TAPERED ANGLE STANDARD MILL FINISH FRAME HEAVY DUTY CARPET INSERT. COLOR: 7325 - WROUGHT IRON	-	FOR CUSTOMER AREA ENTRY CONSTRUCTION SPECIALTIES INC, c-sgroup.com Tessa Harris, tharris@c-sgroup.com
CPT-4	CARPET WITH BOUND EDGE	SHAW CARPET	-	-	OWNER PROVIDED DELIVERY BAY CARPET
CPT-5	CARPET	TARKETT	THOROUGHFARE #04042 COLOR: LIGHTS OUT #36101	ASHLAR INSTALL, LINES PARALLEL TO STOREFRONT	ETHOS BACKING | 24" X 24". ALL THE ARROWS ON THE TILE BACKING ARE POINTING IN THE SAME DIRECTION, BUT EACH ROW OF TILE IS OFFSET OR DROPPED VERTICALLY BY THE HEIGHT OF HALF A TILE. INSTALL PATTERN: ASHLAR CONTACT: LESLIE FONCE, TARKETT T: +1 310 962 6937 F: +1 866 765 2897 E: leslie.fonce@tarkett.com
CPT-7	CARPET AT STAIRS	TARKETT	TREADS & RISERS: ABRASIVE ACTION II BROADLOOM 6' POWERBOND RS BACKING CONTRASTING STRIPE INSET: ABRASIVE ACTION, 2" AT TOP AND BOTTOM TREAD	TREADS& RISERS : WINDER GREY STRIPE INSET: CHARCOAL	CONTACT: LESLIE FONCE, TARKETT T: +1 310 962 6937 F: +1 866 765 2897 E: leslie.fonce@tarkett.com
EP-2	EPOXY BASE PAINT	TENANT COMPANY	PRIMER COAT OF Eco-RCE 8-10 MILS, BODY COAT OF Eco-RCE 8-10 MILS TOP COAT WITH Eco-HTS 100 WITH 46 MESH (STANDARD PATTERN) ALUMINUM OXIDE STANDARD BROADCAST ALL WITH LIGHT GRAY PIGMENT	-	SERVICE AREA, SERVICE BREAKROOM, EMPLOYEE RESTROOMS, LOCKER ROOM, FULL (HEAVY) BROADCAST I THE WASH BAYS, CONTACT: ROBERT HAMILTON, SEAMLESS FLOORING SOLUTIONS; P: 260-619-3921; C: 260-750-3360; seamlessbob3@yahoo.com
EP-3	EPOXY FLOOR	-	PRIMER COAT OF Eco-RCE 8-10 MILS, BODY COAT OF Eco-RCE 8-10 MILS TOP COAT WITH Eco-HTS 100 WITH 291 GRIT (HEAVY PATTERN) ALUMINUM OXIDE FULL BROADCAST, FIELD TO BE COLORED WITH LIGHT GRAY PIGMENT, STRIPES WHERE OCCUR TO BE WROUGHT IRON AND NEON RED PER THE DRAWINGS	-	WASHBAY AND PARKING SPACES NOT EXPOSED. PARKING SPACE FIELD (NOT EXPOSEDTO WEATHER) CONTACT: ROBERT HAMILTON, SEAMLESS FLOORING SOLUTIONS P: 260.750.3360 F: 260.619.3921 C: 260.750.3360 seamlessbob3@yahoo.com
VT1-A	VINYL COMPOSITE TILE	ARMSTRONG	STYLE: STATIC CONTROL FLOORING EXCELON STATIC DISSIPATIVE TILE 51958 COLOR: FOSSIL GRAY 12" X 12" X 1/8" THICK	THROUGH PATTERN	IT/ ELECT ROOM QUARTER TURN PATTERN
VT1	VINYL COMPOSITE TILE	ARMSTRONG	STYLE: STANDARD EXCELON IMPERIAL TEXTURE 51915 COLOR: CHARCOAL 12 X 12 X 1/8" THICK	THROUGH PATTERN	BREAKROOM AND LOCKER ROOM CLASS 2 ASTM F-1066
VT2	VINYL COMPOSITE TILE	TARKETT	STYLE: VCTII 557 SHOOTING STAR 12 X 12 X 1/8" THICK	THROUGH PATTERN	BREAKROOM, IT/ ELECTRICAL ROOM(S)
VS-1	SHEET VINYL HOMOGENOUS	TARKETT	PERFORMA STONEWORK, COLOR: "55032 CASTLEROCK WG"; "55033 GREY SAND CG"		EMPLOYEE RESTROOM INTEGRAL COVE BASE
SC-1	SEALED CONCRETE	SHERWIN WILLIAMS	H&C CLARISHIELD SOLVENT BASED, GLOSS CONCRETE SEALER 250		MINIMUM, ASTM 2047 µs ≥ 0.5 NON HAZARDOUS WALKWAYS USE OVER BARE CONCRETE OR PREVIOUSLY STAINED CONCRETE, PROVIDE EQUIVALENT WATER BASED SEALER WHERE REQ'D BY LOCAL CODE (IE. CA AND CO)
SC-2	SEALED CONCRETE	SHERWIN WILLIAMS	SC-1 PRODUCT + H&C SHARKGRIP SLIP RESISTANT ADDITIVE PRODUCT NUMBER: 50.055008		MINIMUM, ASTM 2047 µs ≥ 0.5 NON HAZARDOUS WALKWAYS USE OVER BARE CONCRETE OR PREVIOUSLY STAINED CONCRETE, PROVIDE EQUIVALENT WATER BASED SEALER WHERE REQ'D BY LOCAL CODE (IE. CA AND CO)
RC-1	CONCRETE RESURFACER	QUIKRETE RE-CAP	NO. 1131-47		SURFACE TO BE REPAIRED AS NEEDED. SURFACE CLEANING, PREPARATION, AND APPLICATION TO BE COMPLETED PER MANUFACTURER INSTRUCTIONS.
WALL FINISHES					
CT-2	LIGHT PORCELAIN TILE	LEA CERAMICHE	STYLE: BASALTINA STONE PROJECT COLOR: NATURALE SIZE: 12" X 24"; BRICK PATTERN	MATTE	FOR CUSTOMER AREA CONTACT: ELISA BELLUCCI T: 704 806 4134 E: e.bellucci@leausa.us
CT-3	PORCELAIN TILE	PORCELANOSA	STYLE: P32192531 ; COLOR: MARMI BLANCO SIZE: 12.4" X 23.3 X .4"	GLOSS	FOR PLUMBING WALL CONTACT: RON ABBOTT 408 592 3553 rabbott@porcelanosa-usa.com
CT-3G	GROUT 1/16"	CUSTOM BUILDING RODUCTS	#381 BRIGHT WHITE PG38117	-	
CT-5	COMPOSITON	DALTILE	12"X24" STACKED PATTERN COLOR: CP01, GESSO GLOSS	-	ALTERNATE FOR CT-3, USE FOR CUSTOMER FACING RESTROOM WALL TO ORDER CONTACT: NORTH AMERICA: ANGELA BRABEC TESLA@DALTILE.COM
CT-5G	MAIPEI	DALTILE	1/8" GROUT JOINT #00 WHITE	-	TO ORDER CONTACT: NORTH AMERICA: ANGELA BRABEC TESLA@DALTILE.COM
FRP-1	FRP STANDARD	MARLITE	WHITE S100 S/2/S	SMOOTH	4' X 8' X 3/32" SHEETS
F-1	FROSTED VINYL	3M	7725-324	-	FROSTED GLASS
V-1	OPAQUE VINYL	3M	7725-10	-	SCOTCHALL, WHITE
FLOOR FINISH THRESHOLDS					
T-2	THRESHOLD	ONE QUARTZ SOLUTIONS BY DALTILE	CONCRETE GRAY NQ87 4"X36"X5/8" WITH STANDARD BEVEL	USE WITH CT-4	CUSTOMER FACING RESTROOM THRESHOLD TO ORDER CONTACT: NORTH AMERICA, TESLA@DALTILE.COM
WALL BASE FINISHES					
VB-1	VINYL WALL BASE	TARKETT	4" H. COVE BASE, COLOR #71 "STORM CLOUD"	MATTE	IF FLOOR FINISH IS SEALED CONCRETE / VCT / CARPET
WB-1	WOOD BASE	-	MEDIUM DENSITY FIBERBOARD SIZE: 3/8" THICK X 4" HIGH	PAINT GRADE	IF FLOOR FINISH IS TILE, U.O.N.
CT-1	DARK PORCELAIN TILE	LEA CERAMICHE	STYLE: BASALTINA STONE PROJECT COLOR: STUCCATA SIZE: 12" X 24"	UN-POLISHED	FOR CUSTOMER TOILET AREA CONTACT: ELISA BELLUCCI T: 704 806 4134 E: e.bellucci@leausa.us
CEILING SYSTEM					
ACT1	2' X 2' X 15/16" ACOUSTIC CEILING TILE	ARMSTRONG	US FINE FISSURED 2'X2' SQUARE LAY-IN ITEM 1728		BREAKROOM, LOCKER ROOM CONTACT: DEB PICKENS NATIONAL ACCOUNT MANAGER T: 480. 695. 9053. DLPICKEN@ARMSTRONGCEILING.COM
GD1	CEILING GRID	ARMSTRONG	STANDARD PRELUDE 15/16" GRID SYSTEM IN WHITE NRC .55 CAC 35		BREAKROOM, LOCKER ROOM
ACT2	2' X 2' X 15/16" ACOUSTIC CEILING TILE	ARMSTRONG	US FINE FISSURED 2'X2' BEVELED TEGULAR ITEM 1734		LOUNGE, CONFERENCE ROOM, SERVICE ADVISOR CONTACT: DEB PICKENS NATIONAL ACCOUNT MANAGER T: 480. 695. 9053. DLPICKEN@ARMSTRONGCEILING.COM
GD2	CEILING GRID	ARMSTRONG	STAND. SUPRAFINE 9/16 GRID SYSTEM IN WHITE-7873-SEISMIC-7 878, NCR .55 CAC 35		LOUNGE, CONFERENCE ROOM, SERVICE ADVISOR
ACT3	2' X 2' X 3/4" ACOUSTIC CEILING TILE	ARMSTRONG	US FINE FISSURED HIGH NRC/CAC 2'X2' ITEM# 1810		OFFICE CONTACT: DEB PICKENS NATIONAL ACCOUNT MANAGER T: 480. 695. 9053. DLPICKEN@ARMSTRONGCEILING.COM WITH SHADOW MOLD #4/A8.01
GD3	CEILING GRID	ARMSTRONG	STANDARD PRELUDE 15/16 GRID IN WHITE NRC 0.70 CAC 40		OFFICE
PAINT FINISHES	NOTE: ALTERNATE TO BENJAMIN MOORE IS SHERWIN WILLIAMS. COLORS TO MATCH BENJAMIN MOORE.				
PT-1	PAINT	BENJAMIN MOORE	BM 2087-10 "NEON RED", TESLA RED	SEE SPECS	VERIFY WITH TESLA REPRESENTATIVE EXACT LOCATIONS IN FIELD INTERIOR: FLAT MATTE, EGGSHELL PEARL/SATIN EXTERIOR: FLAT LOW LUSTRE, SOFT GLOSS/SATIN SEMI GLOSS
PT-2	PAINT	BENJAMIN MOORE	BM OC-65 OR 2127-70 "CHANTILLY LACE"	SEE SPECS	VERIFY WITH TESLA REPRESENTATIVE EXACT LOCATIONS IN FIELD INTERIOR: FLAT MATTE, EGGSHELL PEARL/SATIN EXTERIOR: FLAT LOW LUSTRE, SOFT GLOSS/SATIN SEMI GLOSS
PT-3	PAINT	BENJAMIN MOORE	BM 2124-10 "WROUGHT IRON"	SEE SPECS	VERIFY WITH TESLA REPRESENTATIVE EXACT LOCATIONS IN FIELD INTERIOR: FLAT MATTE, EGGSHELL PEARL/SATIN EXTERIOR: FLAT LOW LUSTRE, SOFT GLOSS/SATIN SEMI GLOSS
PT-4	PAINT	BENJAMIN MOORE	BM 2120-10 "JET BLACK"		VERIFY WITH TESLA REPRESENTATIVE EXACT LOCATIONS IN FIELD INTERIOR: FLAT MATTE, EGGSHELL PEARL/SATIN EXTERIOR: FLAT LOW LUSTRE, SOFT GLOSS/SATIN SEMI GLOSS
PT-5	PAINT	BENJAMIN MOORE	BM 2124-20 "TROUT GRAY"	SEE SPECS	VERIFY WITH TESLA REPRESENTATIVE EXACT LOCATIONS IN FIELD INTERIOR: FLAT MATTE, EGGSHELL PEARL/SATIN EXTERIOR: FLAT LOW LUSTRE, SOFT GLOSS/SATIN SEMI GLOSS
PT-6	PAINT	BENJAMIN MOORE	BM 2124-30 "DEEP SILVER"	SEE SPECS	VERIFY WITH TESLA REPRESENTATIVE EXACT LOCATIONS IN FIELD INTERIOR: FLAT MATTE, EGGSHELL PEARL/SATIN EXTERIOR: FLAT LOW LUSTRE, SOFT GLOSS/SATIN SEMI GLOSS
PT-7	PAINT	BENJAMIN MOORE	BM 2124-40 "THUNDERCLOUD GRAY"		VERIFY WITH TESLA REPRESENTATIVE EXACT LOCATIONS IN FIELD INTERIOR: FLAT MATTE, EGGSHELL PEARL/SATIN EXTERIOR: FLAT LOW LUSTRE, SOFT GLOSS/SATIN SEMI GLOSS
PT-8	PAINT	BENJAMIN MOORE	BM 2124-50 "BUNNY GRAY"	SEE SPECS	VERIFY WITH TESLA REPRESENTATIVE EXACT LOCATIONS IN FIELD INTERIOR: FLAT MATTE, EGGSHELL PEARL/SATIN EXTERIOR: FLAT LOW LUSTRE, SOFT GLOSS/SATIN SEMI GLOSS
PT-9	PAINT	BENJAMIN MOORE	2124-60 "MISTY GRAY"	SEE SPECS	VERIFY WITH TESLA REPRESENTATIVE EXACT LOCATIONS IN FIELD INTERIOR: FLAT MATTE, EGGSHELL PEARL/SATIN EXTERIOR: FLAT LOW LUSTRE, SOFT GLOSS/SATIN SEMI GLOSS
PT-10	PAINT	BENJAMIN MOORE	2124-70 "DISTANT GRAY"	SEE SPECS	VERIFY WITH TESLA REPRESENTATIVE EXACT LOCATIONS IN FIELD INTERIOR: FLAT MATTE, EGGSHELL PEARL/SATIN EXTERIOR: FLAT LOW LUSTRE, SOFT GLOSS/SATIN SEMI GLOSS
PT-15	PAINT	SHERWIN WILLIAMS	B97WD2434 "WHITE"	SEE SPECS	PRO-PARK WATERBORNE TRAFFIC MARKING PAINT
PT-16	PAINT	SHERWIN WILLIAMS	B97LD2022 "BLUE"	SEE SPECS	PRO-PARK WATERBORNE TRAFFIC MARKING PAINT
PT-17	PAINT	SHERWIN WILLIAMS	B97BD2021 "BLACK"	SEE SPECS	PRO-PARK WATERBORNE TRAFFIC MARKING PAINT
PT-18	PAINT	SHERWIN WILLIAMS	B97RD2012 "RED"	SEE SPECS	PRO-PARK WATERBORNE TRAFFIC MARKING PAINT
PT-19	PAINT	SHERWIN WILLIAMS	B97YD2467 "YELLOW"	SEE SPECS	PRO-PARK WATERBORNE TRAFFIC MARKING PAINT
MISCELLANEOUS					
PL1	HIGH PRESSURE PLASTIC LAMINATE	NEVAMAR COMPANY	COLOR: LIBERTY RED	TEXTURED	BOH: OFFICE COUNTER/SHELVES, HALLWAY CLOSET
PL2	HIGH PRESSURE PLASTIC LAMINATE	NEVAMAR COMPANY	COLOR: CHALK WHITE	-	-
PL5	HIGH PRESSURE PLASTIC LAMINATE	FORMICA	COLOR: STORM GRAY	-	MILLWORK
WS1	WINDOW SHADE	-	MECHOSHADE EUROVEIL BASKET WEAVE SERIES DARK: 5311 GRAPHITE, LIGHT: 5316 SLATE		1% FOR SUN CONTROL, 5% FOR OFFICE PRIVACY (NOT FOR SUN CONTROL),
WS2	WINDOW SHADE (BACK OF HOUSE)	-	COMMERCIAL MANUAL SHADES COLOR: VERONA 5% SOFT GRAY SCR-3005-3		1% FOR SUN CONTROL https://www.blinds.com/p/blindscom-commercial-commercial-roller-solar-shades/533522

PAINT SPEC NOTE: EQUAL ALTERNATE TO BENJAMIN MOORE IS SHERWIN WILLIAMS. COLORS TO MATCH BENJAMIN MOORE.

BENJAMIN MOORE CONTACT:

National Accounts Partnership Program Website:
shopnationalaccounts.benjaminmoore.com
Phone: 877-623-8484 (Option 1)
Email: CCP@Benjaminmoore.com
To place order, include: Project Name / Location

-Paint specification, finish and quantity.
-Preferred Benjamin Moore store (if contractor has one)
-Indicate store, delivery or pick-up by contractor from Benjamin Moore store.
-(Delivery free with 4-gallon minimum.)

Account Rep:
Paul Ballas
Strategic National Accounts Manager
Benjamin Moore & Co.
101 Paragon Dr. Montvale Nj, 07645
Cell 908-902-3614 or 551-500-3201
paul.ballas@benjaminmoore.com

DELIVERY BAY CURTAIN SPEC:
- GC to verify site specific height required. Should not drag or gather at the floor.
- Hang two 15'x30' curtains on heavy duty curtain hanging track system: https://www.curtain-and-divider.com/commercial-fabric-curtains/extra-large-commercial-curtains/
- 10' high, black flat matte fabric poly stretch, flat fullness option, small grommets at top of curtain, threaded rod track or as required by existing conditions, Nylon roller hooks.
- Heavy duty curtain hanging track system w/rollers and hardware

https://www.ebay.com/itm/1-foot-of-Heavy-Duty-Steel-Curtain-Hanging-Track-System-w-rollers-hardware/163226103106?hash=item260108ad42:g:yYYAAOSw5sBbhYzp
- Hang from beam with rods and beam clamps.
- 18" pieces of Unistrut slipped into the bottom hem to prevent curtain from swaying in the wind.

Cost: curtain $1400 + heavy duty curtain hanging track system w/rollers and hardware $900 ($16/FT) track + unistrut, rods, clamps etc materials for support from bottom of beam to top of track + install labor + lift.

CANOPY SHADE FABRIC AND FRAME:

Shade Systems Inc
4150 SW 19th Street
Ocala, FL 344784
1-800-609-6066
info@shadesystemsinc.com, Kirk@shadesystemsinc.com
Model Number: T2393609HPM - 39'x18' (4) spaces or 39'x36' (8) spaces
Hip Roof Parking Shade - 9' Eave - 7'x7'x42"D footings and Pier Mounted Columns.. Fabric Net Color: Match Trout Gray unless noted otherwise, Powder Coat Color: Alpine White or Gunmetal Grey,
Vendor does not provide power supply to the structure, lighting fixture or install, and any landscaping cleanup/asphalt pour back once they are complete.

PAINT FOR EXISTING METAL PANELS
Sherwin Williams Paint:
Bond-Plex/WB Acrolon 100 or Sher-Cryl system
The Sherwin Williams Company
National Accounts Director | Commercial Real Estate
101 W. Prospect Ave.
1710 Midland
Cleveland, OH 44115
216-906-6251, Mark.d.spillman@sherwin.com
Contact: Mark Spillman

FILM WRAP FOR EXISTING METAL PANELS

MATCH "BM 2124-50 - BUNNY GRAY"
MATCH "BM 2124-20 - TROUT GRAY"
SQ2TE792C Neon Red Surface Quest Vinyl Wrap

Surfacequest Solutions,
www.surfacequest.com
National Sales Executive
Contact: Chris Schram,
6121 Baker Road, Suite 106
Minneapolis, MN 55345
C: 651-271-5881

METAL PANELS
Alucobond or Alpolic ACM Panels to match Benjamin Moore paint colors.
Max panel dims: Alucobond (62"x196") and Alpolic (62" x 152")

ALUCOBOND ARCHITECTURAL DIVISION
Les Traeger, Brand Identity Manager
Les.Traeger@3acomposites.com, 401-834-2018

CM1 Alucobond Plus Neon Red
CM8 Alucobond Plus Bunny Grey II

ALPOLIC
m-chem.com
Octavio Diaz, octavio.diaz@m-chem.com
Senior Manager National Corporate Identity Sales
M: 281-541-4258
O: 800-422-7270
Andrew Karhu, andrew.karhu@m-chem.com
Marc Ellis, marc.ellis@m-chem.com

CM1 Alpolic CMR 17179 734L1447 Neon Red Custom Color
CM8 Alpolic CMR 18070 732L1579 Bunny Gray Custom Color

-TO BE DELIVERED BY LL AS PART OF FOH BUILT-OUT

TESLA

MODULUS ARCHITECTS & LAND USE PLANNING
8220 SAN PEDRO DR NE SUITE 520
ALBUQUERQUE, NEW MEXICO 87113
PHONE (505) 338-1499
FAX (505) 338-1498

STATE OF COLORADO
Stephen Aaron Dunbar
405806
LICENSED ARCHITECT

PROJECT TITLE

TESLA COLLISION CENTER

6951 S. BLACKHAWK ST, ENGLEWOOD, COLORADO 80112

PROJECT MANAGER

DRAWN BY:

ISSUE / REVISION

ISSUE DATE: 02-12-24

SHEET TITLE

FINISH SCHEDULES

SCALE:

JOB NO. 414063

SHEET NUMBER

A9.01

CONSTRUCTION DOCUMENTS

COPYRIGHT 2021 MODULUS ARCHITECTS
C:\Users\ctorres.MODULUSARCHITEC\Documents\414063-NA-US-CO-ENGLEWOOD-TESLA-COLLISION CENTER_ctoresZXELP.rvt
2/14/2024 4:17:13 PM
TESLA COLLISION CENTER

COPYRIGHT 2021 MODULUS ARCHITECTS
C:\Users\ctorres.MODULUSARCHITEC\Documents\414063-NA-US-CO-ENGLEWOOD-TESLA-COLLISION CENTER_ctoresZXELP.rvt
2/14/2024 4:17:14 PM
TESLA COLLISION CENTER

DOOR SCHEDULE								
NO.	TYPE	MATERIAL	WIDTH	HEIGHT	THICKNESS	FRAME TYPE	HARDWARE GROUP	COMMENTS
102A	J	FABRIC	14' - 0"	14' - 0"	0' - 3"		2	EXISTING ROLL UP OH DOOR TO REMAIN
103A	-		3' - 0"	7' - 0"			-	EXISTING TO REMAIN
104A	-		3' - 0"	7' - 0"			-	EXISTING TO REMAIN
105A	-		3' - 0"	7' - 0"	0' - 1 3/4"		1	EXISTING TO REMAIN
106A			9' - 0"	10' - 0"	0' - 3"		-	EXISTING TO REMAIN
107A			9' - 0"	10' - 0"	0' - 3"		-	EXISTING TO REMAIN
108A			3' - 0"	7' - 0"	0' - 1 3/4"		1	EXISTING TO REMAIN
109A	J	FABRIC	12' - 0"	14' - 0"	0' - 3"		2	EXISTING OH DOOR TO REMAIN
110A	J	FABRIC	12' - 0"	14' - 0"	0' - 3"		2	EXISTING OH DOOR TO REMAIN
111A			3' - 0"	7' - 0"	0' - 1 3/4"		1	EXISTING TO REMAIN
112A			9' - 0"	10' - 0"	0' - 3"		-	EXISTING TO REMAIN
113A			9' - 0"	10' - 0"	0' - 3"		-	EXISTING TO REMAIN
114A			9' - 0"	10' - 0"	0' - 3"		-	EXISTING TO REMAIN
115A			9' - 0"	10' - 0"	0' - 3"		-	EXISTING TO REMAIN

NOTE:
INTERIOR DOORS ENTERING INTO THE SERVICE AREAS ARE TO TO BE PAINTED THUNDERCLOUD GREY (LIGHT GRAY REFER TO FINISH SCHEDULE FOR MORE INFORMATION) WITH STAINLEES STEEL KICKPLATES

HARDWARE GROUPS

GROUP 1 - REAR EXIT DOOR:
(1) *DEFAULT* LOCKSET - SCHLAGE ND80PD-TLR-626, OUTSIDE LEVER IS FIXED, ENTRANCE BY KEY ONLY, INSIDE LEVER ALWAYS FREE FOR IMMEDIATE EGRESS
(1) *WHEN CODE REQUIRED* PANIC HARDWARE - HAGER 4501 SERIES RIM-US26D
(1) CYLINDER - BEST 12E72 STD-626, SATIN CHROME
(3) HINGES - HAGER BB1279-4 1/2" x 4 1/2"-US 26D
(1) CLOSER - LCN 4040XP-H-US26D
(1) SWEEP - PEMKO 315SSN-SS
(1) GASKET - PEMKO S88-BL-30'-0" LENGTH
(1) DRIP GUARD - PEMKO 345-C
(1) COMMERCIAL SADDLE - PEMKO 209 (NEW DOOR)
OR PEMKO 158 (EXISTING DOOR)

GROUP 2 - OVERHEAD:
(1) 3 BUTTON CONTROL STATION
(1) 3 BUTTON REMOTE CONTROL
(1) OVERHEAD DOOR HARDWARE
(1) PHOTO SENSOR ABOVE DOOR ON BOTH SIDES (PER DESIGN MANAGER'S DIRECTION)
(1) BOTTOM EDGE SENSOR
(1) SET WEATHER STRIPPING
DOOR OPERATOR - 1 HORSEPOWER, SINGLE OR 3 PHASE. FOR LOW CEILINGS 12' USE TROLLEY OPERATOR

FINISH
PROTOTYPE - CLEAR ANODIZED

OPTIONS:
ANODIZED BLACK
WHITE POWDERCOAT

GC TO PROVIDE NEW CONSTRUCTION CORES AT THE START OF CONSTRUCTION. PRIOR TO TURNOVER, GC TO PROVIDE AND INSTALL NEW CORES WITH TWO KEYS PER DOOR

ADD AUTO OPENER SENSORS ON PRIMARY ENTRY + EXIT APPROACHES

GC TO CONFIRM EXISTING DOORS, FRAMES, HARDWARE QUANTITIES AT BID WALK. GC TO REPAIR ALL DOORS, FRAMES, HARDWARE TO LIKE NEW CONDITION, REPLACE ANY BROKEN/ MISSING HARDWARE (HANDLES, CLOSERS, KEYS, CORES, ETC.)

NOTE: EXISTING ROLL-UP DOORS TO HAVE APPROACH SENSORS, ON/OFF SWITCH, REMOTES ADDED

DOOR VENDORS

INSTALLER: DH PACE - TESLADOORS@DHPACE.COM

CONTAC
CHRIS HEARN, NATIONAL ACCOUNTS GROUP
P: 888-643-3667
CELL: 314-616-4077
CHRIS.HEARN@DHPACE.COM

ADAM POSLOSKY
ADAM.POSLOSKY@DHPACE.COM

ROLL UP DOOR SPECS

COILING DOOR-
OVERHEAD DOOR COMPANY
- MODEL 610 SERVICE COILING DOOR
- ELECTRIC MOTOR OPERATION
- HEIGHTS 14' - 6" TO 17' - 6"
- MOUNTS TO FACE OF INTERIOR WALL

HIGH SPEED FABRIC DOOR-
OVERHEAD DOOR COMPANY
- MODEL 993 RAPID FLEX
- ELECTRIC MOTOR OPERATION
- HEIGHTS 12' - 0" TO 15' - 0"
- MOUNTS OFFSET FROM COILING DOOR IN SERIES

DOOR TYPES

'2' AFTER DOOR TYPE INDICATES PAIR OF DOORS

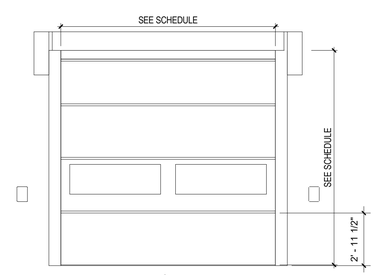

J
HI-SPEED FABRIC ROLL-UP DOOR
OVERHEAD DOOR CO 992

CONSTRUCTION DOCUMENTS

MODULUS ARCHITECTS & LAND USE PLANNING
8220 SAN PEDRO DR NE SUITE 520
ALBUQUERQUE, NEW MEXICO 87113
PHONE (505) 338-1499
FAX (505) 338-1498

STATE OF COLORADO
Stephen Aaron Dunbar
405806
LICENSED ARCHITECT

PROJECT TITLE

TESLA COLLISION CENTER

6951 S. BLACKHAWK ST, ENGLEWOOD, COLORADO 80112

PROJECT MANAGER

DRAWN BY:

ISSUE / REVISION

ISSUE DATE: 02-12-24

SHEET TITLE

DOOR, HARDWARE & WINDOW SCHEDULES

SCALE:

JOB NO. 414063

SHEET NUMBER

A9.02

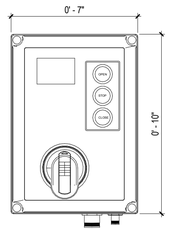

SINGLE PHASE CONTROLLER

MOUNTED MOTOR SIDE AT EYE LEVEL

SINGLE PHASE CONTROLLER | SCALE: 3"=1'-0" | 1

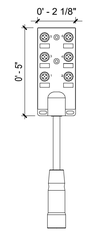

JUNCTION BOX

MOUNTED MOTOR SIDE NEAR MOTOR

JUNCTION BOX DETAIL | SCALE: 3"=1'-0" | 1

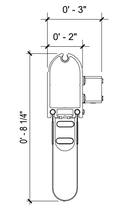

BOTTOM BAR DETAIL

BOTTOM BAR DETAIL | SCALE: 3"=1'-0" | 1

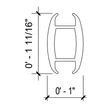

STRUT DETAIL

STRUT DETAIL | SCALE: 6"=1'-0" | 1

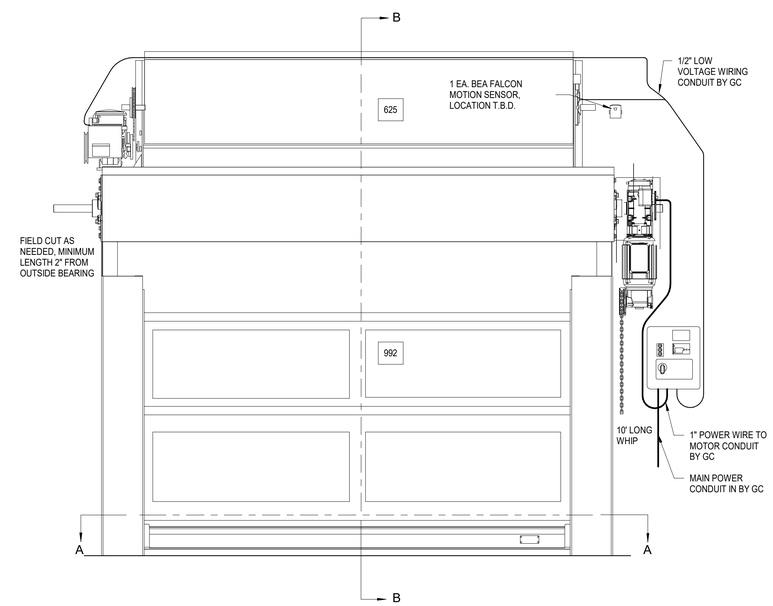

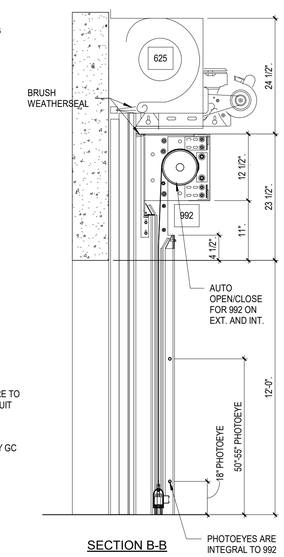

SECTION B-B

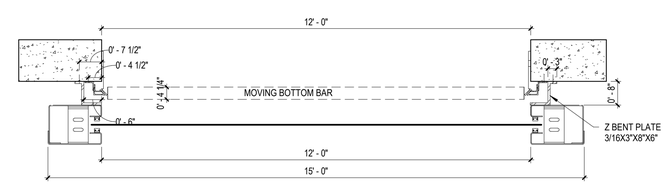

SECTION A-A

TANDEM OVERHEAD DOOR DETAIL | SCALE: 1/2"=1'-0" | 1

CONSTRUCTION DOCUMENTS

MODULUS ARCHITECTS & LAND USE PLANNING
8220 SAN PEDRO DR NE SUITE 520
ALBUQUERQUE, NEW MEXICO 87113
PHONE (505) 338-1499
FAX (505) 338-1498

STATE OF COLORADO
Stephen Aaron Dunbar
405806
LICENSED ARCHITECT

PROJECT TITLE

TESLA COLLISION CENTER

6951 S. BLACKHAWK ST, ENGLEWOOD, COLORADO 80112

PROJECT MANAGER

DRAWN BY:

ISSUE / REVISION

ISSUE DATE: 02-12-24

SHEET TITLE

OVERHEAD DOOR - REFERENCE DETAILS

SCALE:

JOB NO. 414063

SHEET NUMBER

A9.03

COPYRIGHT 2021 MODULUS ARCHITECTS
C:\Users\dtorres.MODULUSARCHITEC\Documents\414063-NA-US-CO-ENGLEWOOD-TESLA-COLLISION CENTER_dtorresZXELP.rvt
2/14/2024 4:17:16 PM
TESLA COLLISION CENTER

DIVISION 00 - CONTRACTING REQUIREMENTS

BIDDING REQUIREMENTS
THE BID SHALL BE MADE ON THE FORM OF PROPOSAL FURNISHED BY THE ARCHITECT OR OWNER. IF A BID FORM IS NOT PROVIDED BIDS SHALL BE SUBMITTED ON CONTRACTORS FORM OF PROPOSAL. SUBMIT BIDS CLEARLY MARKED WITH PROJECT NAME, MALL NAME, CITY (IF APPLICABLE), AND STATE. BID PROPOSALS SHALL BE FAXED TO THE OWNER, THE FAX NUMBER IS LISTED ON THE COVER SHEET OF THIS DRAWING PACKAGE.

THE PROPOSAL SHALL BE SUBMITTED ON A STIPULATED SUM BASIS, PRESENTED BY ASSIGNING TO PREDETERMINED DIVISIONS LISTED ON THE BID FORM SHEET; SUMMATING TO THE STIPULATED SUM. THE BIDDER IS REQUIRED TO BID ON THE BASE BID ALL ALTERNATES. EACH ALTERNATE PRICE SHALL INCLUDE ALL LABOR, MATERIAL, EQUIPMENT, AND SALES TAX.

BEFORE SUBMITTING PROPOSALS FOR THIS WORK, EACH BIDDER WILL BE HELD TO HAVE EXAMINED THE PREMISES AND SATISFIED HIMSELF/HERSELF AS TO THE EXISTING CONDITIONS UNDER WHICH HE/SHE WILL BE OBLIGED TO OPERATE IN PERFORMING THE WORK, OR THAT WILL IN ANY MANNER AFFECT THE WORK UNDER THIS CONTRACT. THE BASE BID SHALL REFLECT MODIFICATIONS TO SYSTEMS AND DEVICES AS REQUIRED BY STATE AND LOCAL CODES AND MALL REQUIREMENTS WHETHER INDICATED OR NOT ON PROJECT DOCUMENTS. THE SUBMISSIONS OF A BID WILL BE EVIDENCE THAT SUCH AN EXAMINATION AND COMPLIANCE WITH GOVERNING CODES/REQUIREMENTS HAS BEEN MADE. LATER CLAIMS FOR LABOR, EQUIPMENT, OR MATERIALS REQUIRED, OR FOR DIFFICULTIES ENCOUNTERED WHICH COULD HAVE BEEN FORESEEN HAD AN EXAMINATION AND CODE/REQUIREMENTS REVIEW BEEN MADE, WILL NOT BE ALLOWED.

QUESTIONS REGARDING INTERPRETATIONS OR CLARIFICATIONS OF REQUIREMENTS SHALL BE DIRECTED TO THE ARCHITECT OF RECORD.

THE CONTRACT WILL BE AWARDED AS SOON AS POSSIBLE TO THE SELECTED BIDDER, AS DETERMINED BY THE OWNER, AND AT HIS/HER SOLE DISCRETION. THE OWNER RESERVES THE RIGHT TO WAIVE ANY INFORMALITY IN BIDS RECEIVED WHEN SUCH WAIVER IS IN THE INTEREST OF THE OWNER.

EXTRA WORK OR CHANGES IN THE WORK NOT CALLED FOR IN THE DRAWINGS OR SPECIFICATIONS ISSUED BY THE OWNER, WILL BE PERFORMED ON A WRITTEN AUTHORIZATION FROM THE OWNER. NO CLAIM FOR EXTRA WORK WILL BE ALLOWED UNLESS A PRICE HAS BEEN AGREED UPON BEFOREHAND ON A CHANGE ORDER PREPARED BY THE CONTRACTOR AND AUTHORIZED BY THE OWNER.

THE PRICE FOR EXTRAS SHALL BE CALCULATED AT THE CONTRACTOR'S COST PLUS OVERHEAD AND PROFIT AT THE PERCENTAGE LIMITED BY THE OWNER.

SUBSTITUTIONS
WHENEVER POSSIBLE THROUGHOUT THE CONTRACT DOCUMENTS, THE MINIMUM ACCEPTABLE QUALITY OF WORKMANSHIP AND MATERIALS HAS BEEN DEFINED EITHER BY MANUFACTURER'S NAME AND CATALOG NUMBER OR BY REFERENCE TO RECOGNIZED INDUSTRY STANDARDS.

UNLESS THE PRECISE COLOR AND PATTERN IS SPECIFICALLY DESCRIBED IN THE CONTRACT DOCUMENTS, WHENEVER A CHOICE OF COLOR OR PATTERN IS AVAILABLE IN A SPECIFIED PRODUCT, SUBMIT ACCURATE COLOR CHARTS AND PATTERN CHARTS TO THE ARCHITECT FOR HIS REVIEW AND SELECTION. VERIFY PRIOR TO BIDDING, THAT ALL SPECIFIED ITEMS WILL BE AVAILABLE IN TIME FOR INSTALLATION DURING ORDERLY AND TIMELY PROGRESS OF THE WORK. IN THE EVENT THAT A SPECIFIED ITEM WILL NOT BE AVAILABLE, NOTIFY THE ARCHITECT PRIOR TO SUBMITTING BID.

THE ARCHITECT WILL CONSIDER PROPOSALS FOR SUBSTITUTION OF MATERIALS, EQUIPMENT AND METHODS ONLY WHEN SUCH SPECIFIED MATERIALS ARE UNAVAILABLE OR METHODS ARE INAPPROPRIATE AS SPECIFIED.

DO NOT SUBSTITUTE MATERIALS OR EQUIPMENT, UNLESS SUCH SUBSTITUTION HAS BEEN SPECIFICALLY APPROVED FOR THIS WORK BY THE ARCHITECT.

SUBSTITUTION PROCEDURES
CONTRACTORS REQUESTING SUBSTITUTES OR "EQUALS" TO ITEMS ON PLANS OR IN SPECIFICATIONS MUST FOLLOW THE PROCEDURES SET FORTH BELOW:

REQUESTS FOR SUBSTITUTIONS MUST BE SUBMITTED TO THE ARCHITECT BY THE GENERAL CONTRACTOR. SUBCONTRACTORS ARE NOT TO SUBMIT TO THE ARCHITECT DIRECTLY.

THE REQUEST FOR SUBSTITUTION MUST BE ACCOMPANIED BY A COMPLETE DESCRIPTION OF THE PROPOSED EQUIPMENT SUCH AS CUT SHEETS OR SAMPLES TO ENABLE THE ARCHITECT TO MAKE A THOROUGH COMPARISON WITH THE SPECIFIED ITEM.

ARCHITECT WILL, UPON SUCH REQUEST, EVALUATE THE PROPOSED SUBSTITUTION ON THE BASIS OF ADVERTISED TECHNICAL PERFORMANCE, SUITABILITY, SIZE OR OTHER CONSIDERATIONS AND INFORM OWNER/TENANT OF THE RECOMMENDED ACTION.

IN ORDER TO FACILITATE THE EVALUATION PROCESS, GENERAL CONTRACTOR SHALL SUBMIT DOCUMENTATION TO SUPPORT THE PROPOSED SUBSTITUTION ON THE BASIS OF WARRANTIES, COST DIFFERENCES, AND EXPECTED SERVICE LIFE AS COMPARED TO THE SPECIFIED EQUIPMENT. PROCUREMENT TIME WILL NOT NORMALLY BE CONSIDERED AS JUSTIFICATION FOR SUBSTITUTION REQUESTS. IN THE EVENT OF PROCUREMENT TIME BEING THE FACTOR, GENERAL CONTRACTOR SHALL PROVIDE ARCHITECT WITH THE SPECIFIC INFORMATION ALLOWING ARCHITECT TO EXPLORE THE DELAY AND TO ATTEMPT TO RESOLVE THE PROBLEM WITHOUT A SUBSTITUTION.

ONLY AFTER ARCHITECT ACCEPTS AND PROVIDES WRITTEN APPROVAL, WILL GENERAL CONTRACTOR ASSUME THE AUTHORITY TO PROCEED WITH THE PROPOSED SUBSTITUTION.

GENERAL CONDITIONS DEFINITIONS
OWNER OR TENANT-- AS USED HEREIN SHALL MEAN TESLA, INC.
DEVELOPER-- AS USED HEREIN SHALL MEAN MALL LANDLORD.
ARCHITECT-- AS USED HEREIN SHALL MEAN ARCHITECT OF RECORD.
CONTRACTOR-- AS USED HEREIN SHALL MEAN TENANT'S GENERAL CONTRACTOR, OF SUBCONTRACTORS.

AGREEMENT
THE DRAWINGS, SPECIFICATIONS, AND OTHER DOCUMENTS PREPARED BY THE ARCHITECT ARE INSTRUMENTS OF THE ARCHITECT'S SERVICE THROUGH WHICH THE WORK TO BE EXECUTED BY THE CONTRACTOR IS DESCRIBED. NEITHER THE CONTRACTOR, SUBCONTRACTOR, SUB-SUBCONTRACTOR, MATERIAL OR EQUIPMENT SUPPLIER SHALL OWN OR CLAIM A COPYRIGHT IN THE DRAWINGS, SPECIFICATIONS, AND OTHER DOCUMENTS PREPARED BY THE ARCHITECT UNLESS OTHERWISE INDICATED, THE ARCHITECT SHALL BE DEEMED THE AUTHOR OF THEM AND WILL RETAIN ALL COMMON LAW, STATUTORY, AND OTHER RESERVED RIGHTS, IN ADDITION TO THE COPYRIGHT. THE DRAWINGS, SPECIFICATIONS, AND OTHER DOCUMENTS PREPARED BY THE ARCHITECT, AND COPIES THEREOF FURNISHED TO THE CONTRACTOR ARE FOR USE SOLELY WITH RESPECT TO THIS PROJECT.

SHOULD THE DRAWINGS AND SPECIFICATIONS BE CONTRADICTORY, OR SHOULD THERE BE ERRORS IN EITHER, THE CONTRACTOR SHALL REFER THE MATTER TO THE ARCHITECT FOR EXPLANATION AND SHALL ABIDE BY THEIR DECISION.

THE CONTRACTOR SHALL TAKE FIELD MEASUREMENTS, VERIFY FIELD CONDITIONS, AND SHALL CAREFULLY COMPARE SUCH FIELD MEASUREMENTS AND CONDITIONS AND OTHER INFORMATION KNOWN TO THE CONTRACTOR WITH THE CONTRACT DOCUMENTS BEFORE COMMENCING ACTIVITIES. ERRORS, INCONSISTENCIES OR OMISSIONS DISCOVERED SHALL BE REPORTED TO THE ARCHITECT AT ONCE.

PERMITS, FEES AND NOTICES
UNLESS OTHERWISE PROVIDED IN THE CONTRACT DOCUMENTS, THE CONTRACTOR SHALL SECURE AND PAY FOR THE BUILDING PERMIT AND OTHER PERMITS AND GOVERNMENTAL FEES, LICENSES AND INSPECTIONS NECESSARY FOR PROPER EXECUTION AND COMPLETION OF THE WORK WHICH ARE CUSTOMARILY SECURED AFTER EXECUTION OF THE CONTRACT AND WHICH ARE LEGALLY ACQUIRED WHEN BIDS ARE RECEIVED OR NEGOTIATIONS CONCLUDED.

THE CONTRACTOR SHALL COMPLY WITH AND GIVE NOTICE AS REQUIRED BY LAWS, ORDINANCES, RULES, REGULATIONS, AND LAWFUL ORDERS OF PUBLIC AUTHORITIES BEARING ON PERFORMANCE OF THE WORK.
WARRANTY
THE CONTRACTOR WARRANTS TO THE OWNER AND ARCHITECT THAT MATERIALS AND EQUIPMENT FURNISHED UNDER THE CONTRACT WILL BE OF GOOD QUALITY AND NEW UNLESS OTHERWISE REQUIRED OR PERMITTED BY THE CONTRACT DOCUMENTS, THAT THE WORK WILL BE FREE FROM DEFECTS NOT INHERENT IN THE QUALITY REQUIRED OR PERMITTED, AND THAT THE WORK WILL CONFORM WITH THE REQUIREMENTS OF THE CONTRACT DOCUMENTS. WORK NOT CONFORMING TO THESE REQUIREMENTS, INCLUDING SUBSTITUTIONS NOT PROPERLY APPROVED AND AUTHORIZED MAY BE CONSIDERED DEFECTIVE. WARRANTY SHALL COMMENCE UPON PROVIDING USE AND OCCUPANCY PERMITS TO THE OWNER AND SHALL BE IN EFFECT FOR THE PERIOD DESCRIBED IN THE CONTRACT BUT NO LESS THAN ONE YEAR.

INSURANCE
THE CONTRACTOR SHALL PURCHASE AND MAINTAIN:
SUCH KINDS OF INSURANCE AS REQUIRED BY FEDERAL LAWS, AND BY THE LAWS OF THE STATE OR STATES IN WHICH THE WORK IS TO BE PERFORMED, OR BY ANY SPECIAL NATURE OF THE WORK WHICH WOULD INCLUDE WORKERS' COMPENSATION LAW AND OTHER EMPLOYEE BENEFIT LAWS. CERTIFICATES EVIDENCING COVERAGE UNDER WORKERS' COMPENSATION LAWS SHALL BE FURNISHED TO THE OWNER FOR APPROVAL OF FORM AND ADEQUACY UPON REQUEST.

CONTRACTOR'S COMPREHENSIVE GENERAL LIABILITY INSURANCE, INCLUDING CONTRACTUAL AND CONTRACTOR'S PROTECTIVE INSURANCE, SUCH AS INSURANCE TO COVER CLAIMS FOR BODILY INJURY AND BROAD FORM PROPERTY DAMAGE FOR COMPREHENSIVE GENERAL LIABILITY (INCLUDING PROTECTIVE) AND FOR COMPREHENSIVE AUTOMOBILE LIABILITY, INCLUDING OWNED, RENTED, HIRED, AND NON-OWNED AUTOMOBILES.

UMBRELLA LIABILITY WITH COMBINATION SINGLE LIMIT, BODILY INJURY, PERSONAL INJURY, AND PROPERTY DAMAGE.

AGREEMENT TO SAVE OTHERS HARMLESS OR TO ASSUME THE LIABILITY OF OTHERS MUST BE INSURED UNDER THE PROVISION FOR CONTRACTUAL LIABILITY BY ENDORSEMENT ON THE GENERAL LIABILITY POLICY.

POLICIES SHALL BE SUBJECT TO APPROVAL OF OWNER AND DEVELOPER FOR FORM AND ADEQUACY OF PROTECTION.

POLICY LIMITS SHALL BE ESTABLISHED BY OWNER OR DEVELOPER.

DIVISION 01 - GENERAL REQUIREMENTS

SUMMARY OF WORK
SCOPE OF WORK INCLUDES, BUT IS NOT LIMITED TO: CONSTRUCT A TEMPORARY ENCLOSURE AT THE STORE FRONT, REMOVING AND STORING OR DISPOSING OF EXISTING EQUIPMENT AS DIRECTED BY THE PLANS AND/OR THE OWNER, DEMOLISHING EXISTING NON STRUCTURAL CONDITIONS TO ORIGINAL DEMISING WALLS AND NEUTRAL LINES OF STOREFRONT (UNLESS DIRECTED OTHERWISE), CONSTRUCTING A NEW PROJECT BASED UPON THE WORK DESCRIBED IN THESE DOCUMENTS, REINSTALLING ORIGINAL AND NEW EQUIPMENT AND COMPLETE PROJECT CLOSEOUT, REMOVING TEMPORARY ENCLOSURES.

PRIOR TO MAKING ANY VARIATIONS FROM THE DRAWINGS AND/OR SPECIFICATIONS THAT MAY BE DEEMED NECESSARY, CONTRACTOR SHALL GIVE ARCHITECT WRITTEN NOTICE INDICATING THE VARIATION PROPOSED AND REQUESTING APPROVAL.

CHANGES IN THE WORK MAY BE ACCOMPLISHED AFTER EXECUTION OF THE CONTRACT, AND WITHOUT INVALIDATING THE CONTRACT, BY CHANGE ORDER, CONSTRUCTION CHANGE DIRECTIVE OR ORDER FOR A MINOR CHANGE IN THE WORK.

EACH CONTRACTOR OR SUBCONTRACTOR SHALL REVIEW THE EQUIPMENT SCHEDULE FOR ITEMS AFFECTING HIS PORTION OF THE WORK. HE SHALL INCLUDE IN HIS PROPOSAL ANY AND ALL LABOR OR MATERIAL AS REQUIRED TO PROVIDE THE COMPLETE PROJECT.

WORK BY OWNER
AT THE OWNER'S REQUEST, SOME OR ALL OF THE EXISTING EQUIPMENT OR FIXTURES MAY BE SAVED FOR REUSE AT THIS OR OTHER LOCATIONS. CONTRACTOR AGREES TO FURNISH A SECURE STORAGE FACILITY, TRANSPORT ITEMS TO BE STORED TO THE STORAGE FACILITY, AND RETURN FOR REUSE THE ITEMS THE OWNER DESIGNATES. THE SECURED STORAGE FACILITY FURNISHED BY THE CONTRACTOR MAY BE LOCATED IN THE DEVELOPER'S MALL, IN A SITE TRAILER WITH DEVELOPER'S PERMISSION, OR IN AN OFF- SITE STORAGE FACILITY UNTIL SUBSTANTIAL COMPLETION. THE OWNER SHALL REMOVE ANY ITEMS NOT REUSED OR INSTRUCT THE CONTRACTOR TO DISPOSE.

CONTRACTOR AGREES TO ACCEPT OWNER FURNISHED ITEMS AT THE JOB SITE AND UNLOAD AND TRANSPORT THESE ITEMS FROM THE TRUCK BED OF DELIVERY CARRIER TO THE STORE OR STORAGE SPACE.
1. OWNER'S PURCHASE ORDER MAY REQUEST TAILGATE DELIVERY OF ITEMS. ICC REGULATIONS ARE STRUCTURED SO THAT THIS CANNOT BE ENFORCED. CONTRACTOR, THEREFORE, MUST ASSUME THAT ALL ITEMS WILL BE DELIVERED TO THE SITE ON A TRUCK BED ONLY.
2. ONCE RECEIVED, CONTRACTOR ASSUMES RESPONSIBILITY FOR ITEM.

CONTRACTOR SHALL REVIEW WITH THE OWNER ALL ITEMS TO BE REUSED FROM EXISTING LOCATION AND/OR SUPPLIED BY OWNER. THE CONTRACTOR AGREES TO INSTALL OR REINSTALL OWNER-SUPPLIED PRODUCTS.

REVIEW DOCUMENTS TO DETERMINE THE EXTENT OF ITEMS SUPPLIED BY THE OWNER.

TEMPORARY CONSTRUCTION ENCLOSURES
ERECT AND MAINTAIN TEMPORARY ENCLOSURES (BARRICADES, SHROUDS, VISQUENE, ETC.) OVER OPENINGS SURROUNDING THE DEMISED TENANT SPACE.
1. TEMPORARY ENCLOSURES SHALL BE DUSTPROOF PARTITIONS AS REQUIRED TO PREVENT SPREAD OF DUST, FUMES, AND SMOKE TO OTHER PARTS OF THE BUILDING.
2. MEET WITH DEVELOPER'S REPRESENTATIVE TO DETERMINE EXTENT OF TEMPORARY ENCLOSURE
3. COSTS FOR TEMPORARY ENCLOSURES, MATERIAL AND/OR LABOR SHALL BE PAID BY CONTRACTOR.
4. IF DEVELOPER PROVIDES CONSTRUCTION OF BARRICADE, CONTRACTOR SHALL NOTIFY THE OWNER ON HIS BID. IF THE GENERAL CONTRACTOR FAILS TO INFORM THE OWNER IN WRITIN,G CONTRACTOR SHALL BE HELD TO HAVE INCLUDED THE BARRICADE IN HIS BID.

UPON COMPLETION OF WORK AND FOLLOWING OWNER'S AND DEVELOPER'S APPROVAL, CONTRACTOR SHALL DISMANTLE TEMPORARY ENCLOSURES AND DISPOSE OF THEM. PATCH AND REPAINT AREAS (MATCHING ADJACENT MATERIALS) WHICH WERE DAMAGED BY TEMPORARY ENCLOSURE.

TEMPORARY FACILITIES
ELECTRIC, WATER, TOILET, TELEPHONE, HEAT, AND ANY OTHER SERVICE REQUIRED IN THE PERFORMANCE OF THE CONTRACT SHALL BE FURNISHED AND PAID FOR BY THE CONTRACTOR UNLESS INDICATED OTHERWISE BY THE OWNER.

CLEANING
THROUGHOUT THE PERIOD OF THEIR ON-SITE ACTIVITY, EACH CONTRACTOR AND SUBCONTRACTOR SHARES THE RESPONSIBILITY TO MAINTAIN THE BUILDING AND SITE IN AN ORDERLY AND CLEAN CONDITION.

EACH CONTRACTOR SHALL PICK UP AND REMOVE ALL DEBRIS RESULTING FROM HIS/HER WORK AND SHALL SWEEP AND CLEAN HIS SHARE OF THE GENERAL DUST AND DIRT CREATED BY WORKMEN AND GENERAL ACTIVITY.

TRASH AND CONSTRUCTION DEBRIS SHALL BE REMOVED FROM THE CONSTRUCTION SITE ON A DAILY BASIS IN A MANNER APPROVED BY MALL MANAGEMENT.
1. MAKE PROVISIONS OR COORDINATE WITH MALL MANAGEMENT TO PROVIDE ARRANGEMENTS FOR THE STORAGE AND REMOVAL OF CONSTRUCTION DEBRIS.
2. PAY COSTS AS ARISE FOR SUCH PROVISION.

SCHEDULE FINAL CLEANING TO ENABLE THE OWNER TO ACCEPT A COMPLETELY CLEAN PROJECT.

"CLEAN," FOR THE PURPOSE OF THIS ARTICLE, AND EXCEPT AS MAY BE SPECIFICALLY PROVIDED OTHERWISE, SHALL BE INTERPRETED MEANING THE LEVEL OF CLEANLINESS GENERALLY PROVIDED BY SKILLED CLEANERS USING COMMERCIAL QUALITY BUILDING MAINTENANCE EQUIPMENT AND MATERIALS.

THE CONTRACTOR SHALL BE RESPONSIBLE FOR CLEANING ALL INTERIOR AND EXTERIOR SURFACES OF THE FIXTURES, INCLUDING GLASS.

DO NOT USE ANY SOLVENT OR ABRASIVES OF ANY TYPE TO CLEAN FIXTURES, PANELING, MOLDINGS OR TRIM WITHOUT FIRST OBTAINING APPROVAL OF FIXTURE CONTRACTOR. USE NO SCENTED CLEANING AGENTS.

VISUALLY INSPECT INTERIOR SURFACES AND REMOVE ALL TRACES OF SOIL, WASTE MATERIALS, SMUDGES, AND OTHER FOREIGN MATTER.

REMOVE ALL TRACES OF SPLASHED MATERIAL FROM ADJACENT SURFACES.

REMOVE PAINT DROPPINGS, SPOTS, STAINS, AND DIRT FROM FINISHED SURFACES.

CLEAN GLASS INSIDE AND OUTSIDE.

TO SURFACES REQUIRING ROUTINE APPLICATION OF BUFFED POLISH, APPLY THE POLISH RECOMMENDED BY THE MANUFACTURER OF THE MATERIAL BEING POLISHED.

PROJECT CLOSEOUT
COMPLY WITH PROCEDURES STATED IN THE AGREEMENT FOR ISSUANCE OF CERTIFICATE OF SUBSTANTIAL COMPLETION

A PUNCH LIST SHALL BE COMPLETED BY THE PROJECT MANAGER OR OWNER AND PRESENTED TO THE CONTRACTOR AS NECESSARY. UPON RECEIPT, THE CONTRACTOR SHALL HAVE FIFTEEN (15) DAYS TO ACT UPON THE LIST. BEYOND THAT PERIOD, THE OWNER MAY AT ITS SOLE DISCRETION AND UPON PRIOR NOTIFICATION OF CONTRACTOR BY OWNER PROCEED TO CORRECT OR CAUSE TO BE CORRECTED ALL DEFICIENCIES THEREIN SHALL BE PAID FOR WITH MONIES CONTAINED IN BUT NOT LIMITED TO THE TEN PERCENT (10%) RETENTION HELD BY THE OWNER. THE PUNCH LIST IN NO WAY LIMITS THE WARRANTY.

SHOULD STATUS OF COMPLETION OF WORK REQUIRE REINSPECTION BY OWNER DUE TO FAILURE OF WORK TO COMPLY WITH CONTRACTOR'S CLAIMS ON INITIAL INSPECTION, OWNER WILL DEDUCT THE AMOUNT OF THE DIRECT COSTS FOR REINSPECTION SERVICES FROM FINAL PAYMENT TO CONTRACTOR.

IN ADDITION TO SUBMITTALS REQUIRED BY THE CONDITIONS OF THE CONTRACT, PROVIDE SUBMITTALS REQUIRED BY GOVERNING AUTHORITIES, AND SUBMIT A FINAL STATEMENT OF ACCOUNTING GIVING TOTAL ADJUSTED CONTRACT SUM, PREVIOUS PAYMENTS AND SUM REMAINING DUE.

UNLESS SPECIFIED OR DIRECTED OTHERWISE, MAKE SUBMITTALS TO OWNER WITH LETTER OF TRANSMITTAL CONTAINING DATE, PROJECT TITLE, CONTRACTOR'S NAME AND ADDRESS, AND LIST OF DOCUMENTS.

RECORD LOCATIONS OF CONCEALED UTILITIES AND APPURTENANCES, MODIFICATIONS, FIELD CHANGES, AND DETAILS ON CONTRACT DOCUMENTS.

KEEP DOCUMENTS CURRENT. DO NOT PERMANENTLY CONCEAL ANY WORK UNTIL REQUIRED INFORMATION HAS BEEN RECORDED. STORE DOCUMENTS SEPARATE FROM THOSE USED FOR CONSTRUCTION.

SUBMIT REQUIRED DOCUMENTS WITHIN TEN (10) DAYS AFTER DATE OF SUBSTANTIAL COMPLETION AND PRIOR TO FINAL APPLICATION FOR PAYMENT.

SUBMIT WARRANTIES AND BONDS AS REQUIRED IN INDIVIDUAL SPECIFICATIONS SECTION. HAVE WARRANTIES AND BONDS EXECUTED BY RESPONSIBLE SUBCONTRACTORS, SUPPLIERS, AND MANUFACTURERS. CO-EXECUTE SUBMITTALS WHEN REQUIRED.

ENVIRONMENTAL PROCEDURES
COMPLY WITH GREEN CODE NOTES IN DRAWINGS.

CONSTRUCTION WASTE MANAGEMENT:
1. GENERAL: ACHIEVE OR EXCEED CODE-REQURIRED MINIMUM END-OF-PROJECT RATES FOR DIVERSION, MEASURED AS PERCENT BY WEIGHT OF TOTAL NON-HAZARDOUS SOLID WASTE GENERATED BY THE WORK.
2. PRACTICE EFFICIENT WASTE MANAGEMENT IN THE USE OF MATERIALS IN THE COURSE OF THE WORK.
3. USE ALL REASONABLE MEANS TO DIVERT CONSTRUCTION AND DEMOLITION WASTE FROM LANDFILLS AND INCINERATORS, INCLUDING RECYCLING AND SALVAGE.
   a. RECYCLING: RECOVERY OF DEMOLITION OR CONSTRUCTION WASTE FOR SUBSEQUENT PROCESSING IN PREPARATION FOR REUSE.
   b. SALVAGE: RECOVERY OF DEMOLITION OR CONSTRUCTION WASTE AND SUBSEQUENT DONATION, SALE OR REUSE IN ANOTHER FACILITY.
4. SUBMIT RECORDS OF DONATIONS, SALES, RECYCLING, AND LANDFILL DISPOSAL FOR SUBSTANTIATION AS REQUIRED BY AUTHORITIES HAVING JURISDICTION.

CONSTRUCTION INDOOR AIR QUALITY:
1. COMPLY WITH SMACNA'S "SMACNA IAQ GUIDELINE FOR OCCUPIED BUILDINGS UNDER CONSTRUCTION."
2. FOR CONSTRUCTION USE OF PERMANENT AIR-HANDLING SYSTEM, PROVIDE TEMPORARY AND PERMANENT RETURN-AIR FILTERS ACCORDING TO MECHANICAL DRAWINGS.

PROVIDE CARBON DIOXIDE MONITORING ACCORDING TO MECHANICAL DRAWINGS.

DIVISION 02 - EXISTING CONDITIONS

SELECTIVE DEMOLITION
REFER TO DIVISION 01 FOR RELATED REQUIREMENTS:
1. STORAGE OF OWNER'S EXISTING ITEMS.
2. TEMPORARY CONSTRUCTION ENCLOSURES.
3. CLEANING.

PROTECTION OF ADJACENT SPACE AND OCCUPANTS:
1. DO NOT INTERFERE WITH USE OF ADJACENT AREAS. MAINTAIN FREE AND SAFE PASSAGE TO AND FROM OCCUPIED AREAS. CARRY OUT DEMOLITION WORK TO CAUSE AS LITTLE INCONVENIENCE TO ADJACENT OCCUPIED BUILDING AREAS AS POSSIBLE.
2. MAINTAIN ACCESSIBLE EXIT ROUTES AT ALL TIMES, SUFFICIENT FOR OCCUPIED SPACE.
3. PROVIDE, ERECT, AND MAINTAIN BARRICADES, LIGHTING, GUARDRAILS, AND WARNING SIGNS AS REQUIRED BY APPLICABLE REGULATORY ADVISOR TO PROTECT OCCUPANTS OF BUILDINGS AND WORKERS.
4. MAINTAIN SECURITY OF EXISTING BUILDINGS WITH TEMPORARY DOORS, CLOSERS, AND LOCKSETS. WHERE AN OPENING IS MADE IN A RATED WALL, PROVIDE TEMPORARY DOOR, FRAME, AND HARDWARE WITH APPROPRIATE RATING FOR WALL CONSTRUCTION.
5. EXECUTE DEMOLITION WORK TO PROTECT ADJACENT PROPERTY AGAINST DAMAGE BY SETTLEMENT, FALLING DEBRIS OR OTHER CAUSES IN CONNECTION WITH THIS WORK.

EXECUTION:
1. PLACE MARKERS TO INDICATE LOCATION OF DISCONNECTED SERVICES. IDENTIFY SERVICE LINES AND CAPPING LOCATIONS ON PROJECT RECORD DOCUMENTS.
2. REMOVE SALVAGED ITEMS AND DEBRIS FROM THE DEMISED SPACE AS IT ACCUMULATES.
3. DO NOT SELL, BURN, OR OTHERWISE DISPOSE OF SALVAGED ITEMS AND DEBRIS ON THE SITE UNLESS DIRECTED OTHERWISE BY OWNER.
4. DEMOLISH CONCRETE AND MASONRY IN SMALL SECTIONS.

CLEANING AND REPAIR:
1. REPAIR DEMOLITION PERFORMED IN EXCESS OF THAT REQUIRED.
2. REMOVE DEMOLISHED MATERIALS, TOOLS, AND EQUIPMENT FROM SITE UPON COMPLETION OF WORK. LEAVE SITE IN AN ACCEPTABLE CONDITION.

DIVISION 03 - CONCRETE

CAST-IN-PLACE CONCRETE
PERFORM CAST-IN-PLACE CONCRETE IN ACCORDANCE WITH ACI 301 - SPECIFICATIONS FOR STRUCTURAL CONCRETE FOR BUILDINGS AND ACI 302.1R - GUIDE FOR CONCRETE FLOOR SLAB CONSTRUCTION.

PRODUCTS:
1. CONCRETE: 3,000 PSI AT 28 DAYS, MAXIMUM SLUMP OF 4-1/2 INCHES UNLESS OTHERWISE REQUIRED BY STRUCTURAL ENGINEER OF RECORD.
2. ADMIXTURES: POSSILITH OR EQUAL, AS MANUFACTURED BY MASTER BUILDERS COMPANY.
3. SLAB REINFORCING: WELDED WIRE FABRIC, 6 X 6-#10 X 10, ASTM A185, SMOOTH TYPE. LAPPED 6" AT END AND SIDE LAPS.
4. FILL: 4" COMPACTED LAYER OF POROUS FILL UNDER CONCRETE SLAB, EXCEPT AS OTHERWISE REQUIRED BY DEVELOPER CRITERIA.

PREPARATION AND PLACEMENT:
1. SUBGRADE: BRING TO SPECIFIED LEVEL, COMPACT AND FINISH SMOOTH.
2. COORDINATE WITH WORK OF OTHER SECTIONS TO FORM AND SET OPENINGS, SLOTS, RECESSES, CHASES, SLEEVES, BOLTS, ANCHORS, AND OTHER INSERTS.
3. INSTALL CAST-IN-PLACE CONCRETE SLABS LEVEL WITH ADJACENT CONCRETE SURFACES, UNLESS DIRECTED OTHERWISE. CONCRETE SLABS SHALL BE PLANE WITH A MAXIMUM TOLERANCE OF 1/8" IN 10" AND SHALL NOT VARY AT ANY POINT MORE THAN 1/8" ABOVE OR BELOW THE PLANE SURFACE.
4. PROTECT FRESHLY DEPOSITED CONCRETE FROM PREMATURE DRYING AND EXCESSIVELY HOT OR COLD TEMPERATURES AND MAINTAIN WITH MINIMAL MOISTURE LOSS AT A RELATIVELY CONSTANT TEMPERATURE FOR A PERIOD OF TIME NECESSARY FOR THE EARLY HYDRATION OF THE CEMENT AND PROPER HARDENING OF THE CONCRETE.

CURE EXPOSED SURFACES OF CONCRETE DIRECTLY AFTER FINISHING OPERATIONS, BY FOLLOWING METHODS:

1. LIQUID MEMBRANES CONSISTING OF PLACING AN APPROVED WATERPROOF COMPOUND ON ALL EXPOSED SURFACES USING A STYRENE BUTADIENE TYPE COMPOUND, CONFORMING TO ASTM C 309, 30 PERCENT SOLIDS CONTENT MINIMUM, WITH A MAXIMUM MOISTURE LOSS OF 0.030 GRAMS PER SQUARE CENTIMETER WHEN APPLIED AT A COVERAGE RATE OF 300 SQUARE FEET PER GALLON.
2. SLABS TO RECEIVE GROUT BED FINISH SHALL BE WATER-CURED FOR 7 DAYS WITHOUT USE OF CURING COMPOUNDS.

CONCRETE WORK SHALL NOT BE DONE WHEN TEMPERATURE IS 40° F OR LESS AND FALLING.

CONCRETE TO BE EXPOSED IN FINISHED WORK:
1. THOROUGHLY CLEAN EXPOSED SURFACES.
2. RE-COAT WITH CURING/HARDENING COMPOUND.

CLEANING AND ADJUSTMENT:
1. MODIFY OR REPLACE CONCRETE NOT CONFORMING TO REQUIRED LINES, DETAIL, AND ELEVATIONS.
2. REPAIR OR REPLACE CONCRETE NOT PROPERLY PLACED OR WITH EXCESSIVE HONEYCOMBING OR OTHER DEFECTS. DO NOT PATCH, REPAIR OR REPLACE EXPOSED ARCHITECTURAL CONCRETE EXCEPT UPON EXPRESS DIRECTION OF ARCHITECT.

DIVISION 05 - METALS

STRUCTURAL STEEL AND ALUMINUM FRAMING
PRODUCTS:
1. STRUCTURAL STEEL: ASTM A36.
2. ALUMINUM EXTRUSIONS: STYLEMARK, INC. PROVIDE SHAPES, COMPONENTS, ASSEMBLES AND FINISHES AS INDICATED OR AS SELECTED BY ARCHITECT. SHOP ASSEMBLED.
3. BOLTS, NUTS, AND WASHERS: ASTM 307.
4. WELDING MATERIALS: AWS D1.1; TYPE REQUIRED FOR MATERIALS BEING WELDED.
5. SHOP PRIMER: SSPC PAINT-25, RED. INCLUDING FIELD TOUCH UP.

FABRICATION:
1. VERIFY DIMENSIONS ON SITE PRIOR TO SHOP FABRICATION.
2. GRIND EXPOSED WELDS FLUSH AND SMOOTH WITH ADJACENT FINISHED SURFACES. EASE EXPOSED EDGES TO SMALL UNIFORM RADIUS.
3. EXPOSED MECHANICAL FASTENINGS: FLUSH COUNTERSUNK SCREWS OR BOLTS, UNOBTRUSIVELY LOCATED, CONSISTENT WITH DESIGN OF STRUCTURE, EXCEPT WHERE SPECIFICALLY NOTED OTHERWISE.
4. MAKE EXPOSED JOINTS BUTT TIGHT, FLUSH, AND HAIRLINE.
5. SUPPLY COMPONENTS REQUIRED FOR ANCHORAGE OF METAL FABRICATIONS. FABRICATE ANCHORAGE AND RELATED COMPONENTS OF SAME MATERIAL AND FINISH AS METAL FABRICATION, EXCEPT WHERE SPECIFICALLY NOTED OTHERWISE.
6. CLEAN SURFACES OF RUST, SCALE, GREASE, AND FOREIGN MATTER PRIOR TO FINISHING.
7. DO NOT PRIME SURFACES IN DIRECT CONTACT BOND WITH CONCRETE OR WHERE FIELD WELDING IS REQUIRED.
8. PRIME PAINT ITEMS SCHEDULED WITH TWO COATS.

EXECUTION:
1. INSTALL ITEMS PLUMB AND LEVEL, ACCURATELY FITTED, FREE FROM DISTORTION OR DEFECTS.
2. AFTER INSTALLATION, TOUCH-UP FIELD WELDS, SCRATCHED, OR DAMAGED SURFACES WITH PRIMER.
3. PROVIDE AND INSTALL ITEMS LISTED IN SCHEDULE AND SHOWN ON DRAWINGS WITH ANCHORAGE AND ATTACHMENTS NECESSARY FOR INSTALLATION.

DECORATIVE METAL FABRICATIONS
SECTION INCLUDES WHEEL DISPLAY STANDS.

PLATE AND SHEET ALUMINUM: ASTM B209, ALLOY AND TEMPER RECOMMENDED BY FABRICATOR.

WELDING RODS AND ELECTRODES: PER AWS SPECIFICATIONS FOR ALLOY WELDED.

FABRICATION:
1. FORM DECORATIVE METAL TO REQUIRED SHAPES AND SIZES, TRUE TO LINE AND LEVEL WITH TRUE CURVES AND ACCURATE ANGLES AND SURFACES. FINISH EXPOSED SURFACES TO SMOOTH, SHARP, WELL-DEFINED LINES AND ARRIS.
2. MILL JOINTS TO A TIGHT, HAIRLINE FIT. COPE OR MITER CORNER JOINTS.
3. WHERE WELDING CANNOT BE CONCEALED BEHIND FINISHED SURFACES, FINISH JOINTS TO COMPLY WITH NOMMA'S "VOLUNTARY JOINT FINISH STANDARDS" FOR TYPE 1 WELDS: NO EVIDENCE OF A WELDED JOINT.

POWDER-COAT FINISH:
1. AAMA 2603, EXCEPT WITH A MINIMUM DRY FILM THICKNESS OF 1.5 MILS.
2. COMPLY WITH COATING MANUFACTURER'S WRITTEN INSTRUCTIONS FOR CLEANING, CONVERSION COATING, AND APPLYING AND BAKING FINISH.

TESLA

MODULUS ARCHITECTS & LAND USE PLANNING
8220 SAN PEDRO DR NE SUITE 520
ALBUQUERQUE, NEW MEXICO 87113
PHONE (505) 338-1499
FAX (505) 338-1498

STATE OF COLORADO
Stephen Aaron Dunbar
405806
LICENSED ARCHITECT

PROJECT TITLE

TESLA COLLISION CENTER

6951 S. BLACKHAWK ST, ENGLEWOOD, COLORADO 80112

PROJECT MANAGER

DRAWN BY:

ISSUE / REVISION

CONSTRUCTION DOCUMENTS

ISSUE DATE: 02-12-24

SHEET TITLE

ARCHITECTURAL SPECIFICATIONS

SCALE:

JOB NO. 414063

SHEET NUMBER

A10.01

COPYRIGHT 2021 MODULUS ARCHITECTS
C:\Users\ctorres.MODULUSARCHITEC\Documents\414063-NA-US-CO-ENGLEWOOD-TESLA-COLLISION CENTER_ctorresZXELP.rvt
2/14/2024 4:17:16 PM
TESLA COLLISION CENTER

COPYRIGHT 2021 MODULUS ARCHITECTS
C:\Users\dorres.MODULUSARCHITEC\Documents\414063-NA-US-CO-ENGLEWOOD-TESLA-COLLISION CENTER_dorresZXELP.rvt
2/14/2024 4:17:17 PM
TESLA COLLISION CENTER

DIVISION 06 - WOODS AND PLASTICS

ROUGH CARPENTRY
DIMENSION LUMBER:
1. DIMENSION LUMBER FOR BLOCKING, BACKING, AND MISCELLANEOUS FRAMING SHALL BE CONSTRUCTION GRADE, Fb - SINGLE = 1350 psi. SPRUCE-PINE-FIR (SOUTH).
2. DIMENSION LUMBER FOR STUDS SHALL BE HEM - FIR, NO. 2 & BTR.
3. BOARDS, ONE INCH THICK AND UNDER WHERE EXPOSED, SHALL BE NO. 1 COMMON DOUGLAS FIR, WHITE FIR, WHITE SPRUCE, OR PONDEROSA PINE UNLESS NOTED OTHERWISE. MOISTURE CONTENT SHALL NOT EXCEED 19 PERCENT.
4. BOARDS, ONE INCH THICK AND UNDER WHERE CONCEALED BY PERMANENT CONSTRUCTION, SHALL BE NO. 2 OR BETTER.

WOOD PRODUCTS:
1. FORMALDEHYDE EMISSIONS: COMPLY WITH LIMITS IN GREEN BUILDING CODE NOTES IN DRAWINGS.
2. INTERIOR PLYWOOD WHERE COMPLETELY CONCEALED BY PERMANENT CONSTRUCTION SHALL BE C-D PLUGGED INT-APA.
3. EXTERIOR PLYWOOD WHERE CONCEALED OR USED FOR BACKING FOR OTHER MATERIALS SHALL BE C-D EXT-APA.

NAILS, SPIKES, AND STAPLES SHALL BE GALVANIZED FOR EXTERIOR LOCATIONS, HIGH HUMIDITY LOCATIONS, AND TREATED WOOD; PLAIN FINISH FOR OTHER INTERIOR LOCATIONS. USE SIZES AND TYPES TO SUIT APPLICATION.

BOLTS, NUTS, WASHERS, LAGS, AND SCREWS SHALL BE MEDIUM CARBON STEEL. USE SIZE AND TYPE TO SUITE APPLICATION, GALVANIZED FOR EXTERIOR LOCATIONS, HIGH HUMIDITY LOCATIONS, AND TREATED WOOD; PLAIN FINISH FOR OTHER INTERIOR LOCATIONS.

PROVIDE TOGGLE BOLTS OR TAPCON FASTENERS FOR ANCHORAGE TO HOLLOW MASONRY. PROVIDE EXPANSION SHIELD AND LAG BOLT FOR ANCHORAGE TO SOLID MASONRY OR CONCRETE. PROVIDE BOLTS OR POWER ACTIVATED FASTENERS FOR ANCHORAGE TO STEEL.

PLYWOOD, FRAMING, BLOCKING, ETC. ON THE INTERIOR OR EXTERIOR IS REQUIRED TO BE FIRE-RETARDANT-TREATED AND SHALL BE BY PRESSURE TREATMENT IN ACCORDANCE WITH AWPB STANDARD C-20 FOR LUMBER AND C-27 FOR PLYWOOD.
1. TREATED MATERIAL SHALL BE LABELED TO INDICATE PRESSURE TREATMENT.
2. TREATMENT SHALL BE FOR CLASS "A" FLAME SPREAD RATING.

FRAMING SHALL BE IN ACCORDANCE WITH GENERALLY ACCEPTED FRAMING PRACTICES.

1. BUCKS, WHERE REQUIRED FOR FRAMES, SHALL BE NOMINAL 2 INCH THICK MATERIAL AND OF WIDTH REQUIRED BY CONDITIONS. ANCHOR INTO CONCRETE OR MASONRY WALLS LAG BOLTS AND SHIELDS.
2. BLOCKING SHALL BE FURNISHED WHERE REQUIRED FOR ATTACHMENT OF OTHER MATERIALS. THEY SHALL BE PLUMB, LEVEL, STRAIGHT AND SET TO LINE. ALL GROUNDS SHALL BE SOLID. GROUNDS SHALL BE PROVIDED AT ALL OPENINGS IN WALLS REQUIRING WOOD TRIM OR WHERE GRILLES ARE BEING INSTALLED.
3. CUT MEMBERS SQUARE ON BEARINGS, CLOSELY FITTED, ACCURATELY CUT TO REQUIRED LINES AND LEVELS AND RIGIDLY SECURED IN PLACE.
4. INSTALL MISCELLANEOUS BLOCKING, NAILING STRIPS, FRAMING, SHEATHING, AND BACKING AS REQUIRED FOR ATTACHING FASTENERS, ACCESSORIES FOR WALL ITEMS,AND ETC.
5. INSTALL MEMBERS TRUE, PLUMB, AND LEVEL. SECURE IN PLACE.
6. SPACE MISCELLANEOUS FRAMING AND FURRING AT 16 INCHES ON CENTER.
7. CONSTRUCT MEMBERS OF CONTINUOUS PIECES OF LONGEST POSSIBLE LENGTHS.

FINISH CARPENTRY
THIS SECTION INCLUDES FINISH CARPENTRY AND FABRICATED PLASTIC ITEMS, OTHER THAN SHOP FABRICATED WORK, WITH ATTACHMENT ACCESSORIES.

STORE INDOORS IN VENTILATED AREAS WITH CONSTANT 60 DEGREE FAHRENHEIT TEMPERATURE AND 55 PERCENT MAXIMUM RELATIVE HUMIDITY.

WOOD PRODUCTS:
1. FORMALDEHYDE EMISSIONS: COMPLY WITH LIMITS IN GREEN BUILDING CODE NOTES IN DRAWINGS.
2. SOFTWOOD LUMBER: PS 20; CUSTOM GRADE IN ACCORDANCE WITH AWI; MAXIMUM MOISTURE CONTENT OF 5 TO 10 PERCENT FOR INTERIOR WORK AND 15 PERCENT FOR EXTERIOR WORK.
3. HARDWOOD LUMBER: PS 58 OR FED. SPEC MM-L-736; CUSTOM GRADE IN ACCORDANCE WITH AWI; MAXIMUM MOISTURE CONTENT OF 5 TO 10 PERCENT.
4. WOOD PARTICLE BOARD: MEDIUM DENSITY PARTICLEBOARD (45 LBS.).
5. WOOD FIBER BOARD: MEDIUM DENSITY FIBERBOARD (37 TO 50 LBS. PER CUBIC FOOT).
6. SOFTWOOD PLYWOOD: APA A-B.
7. HARDBOARD: PRESSED WOOD FIBER; STANDARD TEMPERED SERVICE GRADE.

FRAME CONSTRUCTION: HARDWOOD AS INDICATED IN THE SCHEDULE, SOLID WOOD JAMBS AND HEAD ACCURATELY HOUSED TOGETHER AND SECURED WITH NAILS AND GLUE AS REQUIRED. APPLY STOPS OF SAME SPECIES AS FRAME.

INTERIOR WOOD BLIND DOOR FRAMES: AWI CUSTOM - ANY CLOSED GRAIN HARDWOOD OR MDF.

NAILS: SIZE AND TYPE TO SUIT APPLICATION.

BOLTS, NUTS, WASHERS, LAGS, AND SCREWS: SIZE AND TYPE TO SUIT APPLICATION; NON-CORROSIVE FOR HIGH HUMIDITY, PLAIN FINISH AT OTHER INTERIOR LOCATIONS.

INSTALLATION:
1. VERIFY THAT MECHANICAL, ELECTRICAL, AND BUILDING ITEMS AFFECTING THIS SECTION ARE PLACED AND READY TO RECEIVE FINISH CARPENTRY ITEMS.
2. SET AND SECURE MATERIALS AND COMPONENTS IN PLACE, PLUMB, AND LEVEL.
3. FIT EXPOSED EDGES OF PLYWOOD AND PARTICLE BOARD SHELVING AND SITE MADE CASEWORK WITH HARDWOOD EDGING.
4. INSTALL HARDWARE IN ACCORDANCE WITH MANUFACTURER'S INSTRUCTIONS.
5. SAND WORK SMOOTH AND SET EXPOSED NAILS AND SCREWS. APPLY WOOD FILLER IN EXPOSED NAIL AND SCREW INDENTATIONS.

CASEWORK AND COUNTERTOPS
SECTION INCLUDES:
1. FABRICATION AND INSTALLATION OF SHELVING AND COUNTERTOPS.
2. INSTALLATION OF OWNER-PROVIDED CABINETS.

FORMALDEHYDE EMISSIONS OF WOOD PRODUCTS: COMPLY WITH LIMITS IN GREEN BUILDING CODE NOTES IN DRAWINGS.

ADHESIVES AND SEALANTS: COMPLY WITH LIMITS IN GREEN BUILDING CODE NOTES IN DRAWINGS.

PROVIDE INSTALLATION MATERIALS COMPLYING WITH FINISH CARPENTRY SPECIFICATIONS AND "ARCHITECTURAL WOODWORKING STANDARDS" .

PROVIDE PREMIUM GRADE MATERIALS AND FABRICATION AT SHOWROOM AND CUSTOM GRADE AT BACK OF HOUSE SPACES.

COUNTERTOPS:
1. SUBSTRATE: PARTICLE BOARD PER ANSI A208.1, M2 MADE WITH EXTERIOR GLUE, OR EXTERIOR SOFTWOOD PLYWOOD COMPLYING WITH DOC PS 1, GRADE C-C PLUGGED, TOUCH-SANDED..
2. HIGH-PRESSURE DECORATIVE LAMINATE: NEMA LD 3, GRADE HGS AT TOPS AND EDGES.
3. SOLID SURFACE MATERIAL: HOMOGENEOUS SOLID SHEETS OF RESIN, PER ANSI SS1.
4. SIMULATED STONE: SOLID SHEETS OF QUARTZ AGGLOMERATE WITH MATRIX OF FILLED PLASTIC RESIN, COMPLYING WITH "PHYSICAL CHARACTERISTICS OF MATERIALS " ARTICLE OF ANSI SS1.

SHELVING:
1. SUBSTRATE: PARTICLE BOARD PER ANSI A208.1, M2 MADE WITH EXTERIOR GLUE, OR EXTERIOR SOFTWOOD PLYWOOD COMPLYING WITH DOC PS 1, GRADE C-C PLUGGED, TOUCH-SANDED..
2. HIGH-PRESSURE DECORATIVE LAMINATE: NEMA LD 3, GRADE HGS AT TOPS AND EDGES.

INSTALLATION: COMPLY WITH "ARCHITECTURAL WOODWORKING STANDARDS". MATCH OR EXCEED GRADE OF INSTALLED PRODUCTS.

DIVISION 07 - THERMAL AND MOISTURE PROTECTION

FIRESTOPPING
VOC CONTENT OF SEALANT PRODUCTS: PER GREEN BUILDING CODE NOTES IN DRAWINGS.

FIRE-TEST-RESPONSE CHARACTERISTICS: FIRESTOPPING JOINT AND PENETRATION ASSEMBLIES SHALL COMPLY WITH THE FOLLOWING:
1. TESTED BY UL, INTERTEK ETL SEMKO. OR FM GLOBAL.
2. IDENTICAL PRODUCTS AND ASSEMBLIES TO THOSE TESTED.

JOINTS IN OR BETWEEN FIRE-RESISTANCE RATING CONSTRUCTION: RATINGS DETERMINED PER ASTM E 814 OR UL 1479.
1. FIRE RATING: EQUAL TO OR EXCEEDING RATING OF JOINED CONSTRUCTION.
2. SMOKE RATING: L-RATING DETERMINED PER UL 2079, NOT TO EXCEED 5.0 CFM/FT IN SMOKE BARRIERS.
3. EXPOSED JOINT SYSTEMS: FLAME SPREAD INDEX LESS THAN 25 AND SMOKE DEVELOPED INDEX LESS THAN 450, PER ASTM E84.

PENETRATIONS IN FIRE-RESISTANCE RATING CONSTRUCTION: RATINGS DETERMINED PER ASTM E1966 OR UL 2079.
1. F RATING: EQUAL TO OR EXCEEDING RATING OF PENETRATED CONSTRUCTION.
2. T RATING: IN HORIZONTAL ASSEMBLIES, AT LEAST 1 HOUR, BUT NOT LESS THAN FIRE RESISTANCE OF PENETRATED CONSTRUCTION.
3. SMOKE RATING: L-RATING DETERMINED PER UL 2079, NOT TO EXCEED 5.0 CFM/FT IN SMOKE BARRIERS.
4. EXPOSED PENETRATION SYSTEMS: FLAME SPREAD INDEX LESS THAN 25 AND SMOKE DEVELOPED INDEX LESS THAN 450, PER ASTM E84.

PREPARATION: CLEAN, PRIME AND MASK ACCORDING TO SEALANT MANUFACTURER'S INSTRUCTIONS.

INSTALL FIRESTOPPING ASSEMBLIES TO COMPLY WITH MANUFACTURER'S WRITTEN INSTRUCTIONS AND PUBLISHED DRAWINGS.

ASSEMBLY SCHEDULE: SUBMIT PROPOSED ASSEMBLIES FOR ARCHITECT'S ACCEPTANCE. INDICATE LOCATIONS IN WORK AND ASSEMBLY NUMBERS FROM ONE OR MORE OF THE FOLLOWING SOURCES:
1. UL: FIRE RESISTANCE DIRECTORY.
2. INTERTEK ETL SEMKO: DIRECTORY OF LISTED BUILDING PRODUCTS, FIRESTOP SYSTEMS SECTION.
3. FM GLOBAL: BUILDING MATERIALS APPROVAL GUIDE.

JOINT SEALANTS
VOC CONTENT OF INTERIOR SEALANTS: PER GREEN BUILDING CODE NOTES IN DRAWINGS.

SEALANTS:
1. SILICONE JOINT SEALANTS: MILDEW-RESISTANT, NONSAG, USE NT, ASTM C920.
2. URETHANE JOINT SEALANTS: POURABLE, USE T, ASTM C920.
3. LATEX JOINT SEALANTS: TYPE OP, GRADE NF, ASTM C834.

JOINT SEALANT BACKING: CYLINDRICAL, ASTM C1330, TYPE C UNLESS OTHERWISE INDICATED IN JOINT SEALANT MANUFACTURER'S INSTRUCTIONS.

PREPARATION: CLEAN, PRIME AND MASK ACCORDING TO SEALANT MANUFACTURER'S INSTRUCTIONS.

INSTALL SEALANTS USING PROVEN TECHNIQUES THAT COMPLY WITH THE FOLLOWING AND AT THE SAME TIME BACKINGS ARE INSTALLED:
1. PLACE SEALANTS SO THEY DIRECTLY CONTACT AND FULLY WET JOINT SUBSTRATES.
2. COMPLETELY FILL RECESSES IN EACH JOINT CONFIGURATION.
3. PRODUCE UNIFORM, CROSS-SECTIONAL SHAPES AND DEPTHS RELATIVE TO JOINT WIDTHS THAT ALLOW OPTIMUM SEALANT MOVEMENT CAPABILITY.

TOOLING OF NONSAG SEALANTS: IMMEDIATELY AFTER SEALANT APPLICATION AND BEFORE SKINNING OR CURING BEGINS, TOOL SEALANTS TO FORM SMOOTH, UNIFORM BEADS OF CONFIGURATION INDICATED; TO ELIMINATE AIR POCKETS; AND TO ENSURE CONTACT AND ADHESION OF SEALANT WITH SIDES OF JOINT.
1. REMOVE EXCESS SEALANT FROM SURFACES ADJACENT TO JOINTS.
2. USE TOOLING AGENTS THAT ARE APPROVED IN WRITING BY SEALANT MANUFACTURER AND THAT DO NOT DISCOLOR SEALANTS OR ADJACENT SURFACES.
3. PROVIDE CONCAVE JOINT PROFILE PER FIGURE 8A IN ASTM C 1193, UNLESS OTHERWISE INDICATED.

DIVISION 08 - DOORS, FRAMES AND HARDWARE

STOREFRONT
PROVIDED UNDER SEPARATE CONTRACT. DRAWING INFORMATION IS FOR COORDINATION.

HOLLOW METAL DOORS AND FRAMES
PROVIDE LABELED OR NON-LABELED DOORS AND FRAMES FRAMES IN THE DIMENSIONS AND TYPE SHOWN ON DRAWINGS IN 18 GAUGE FOR INTERIOR DOORS AND FRAMES AND 16 GAUGE GALVANIZED FOR EXTERIOR DOORS AND FRAMES.

PROVIDE REINFORCING FOR SPECIFIED HARDWARE.

DOORS AND FRAMES SHALL BE SHOP PRIMED.

SET FRAMES ACCURATELY INTO POSITION, PLUMBED, ALIGNED AND BRACED UNTIL PERMANENT ANCHORS ARE SET. AFTER WALL CONSTRUCTION REMOVE TEMPORARY BRACING.

AT IN-PLACE CONSTRUCTION, SET FRAMES AND SECURE WITH SUITABLE ANCHORAGE DEVICES.

BEVEL STRIKE EDGE OF SINGLE ACTING DOORS 1/8 INCH IN 2 INCHES.

PREPARE DOORS TO RECEIVE HARDWARE. REFER TO HARDWARE SCHEDULE FOR HARDWARE REQUIREMENTS.

INSTALL DOORS PLUMB AND SQUARE, AND WITH MAXIMUM DIAGONAL DISTORTION OF 1/16 INCH. INSTALL HARDWARE IN ACCORDANCE WITH REQUIREMENTS STATED IN HARDWARE SCHEDULE.

WOOD DOORS
PROVIDE SOLID CORE DOORS COMPLYING WITH "ARCHITECTURAL WOODWORKING STANDARDS".
1. PAINTED DOORS: CUSTOM GRADE
2. DOORS WITH TRANSPARENT FINISH: PREMIUM GRADE.

FLUSH INTERIOR DOORS SHALL BE 1-3/4 INCH THICK BIRCH FACE VENEER DOOR.

BEVEL STRIKE EDGE OF SINGLE ACTING DOORS 1/8 INCH IN 2 INCHES.

PREPARE DOORS TO RECEIVE HARDWARE. REFER TO HARDWARE SCHEDULE FOR HARDWARE REQUIREMENTS.

INSTALL WOOD DOORS PLUMB AND SQUARE, AND WITH MAXIMUM DIAGONAL DISTORTION OF 1/16 INCH. INSTALL HARDWARE IN ACCORDANCE WITH REQUIREMENTS STATED IN HARDWARE SCHEDULE.

HARDWARE
PROVIDE ITEMS AS LISTED IN HARDWARE SCHEDULE, COMPLETE TO FUNCTION AS INDICATED.

INSTALL HARDWARE IN ACCORDANCE WITH MANUFACTURER'S INSTRUCTIONS AND RECOMMENDATIONS, USING PROPER TEMPLATES.

ACCURATELY AND PROPERLY FIT HARDWARE TO DOORS AND FRAMES. REMOVE EXPOSED PARTS UNTIL AFTER PAINT FINISHING IS COMPLETED. RE-INSTALL AFTER FINISHING IS COMPLETED. FIT FIXED PARTS SNUG AND FLUSH. ADJUST OPERATING PARTS TO MOVE FREELY AND SMOOTHLY WITHOUT BINDING, STICKING, OR WITH EXCESSIVE CLEARANCE.

AFTER THE WORK HAS BEEN OTHERWISE COMPLETED, EXAMINE HARDWARE IN PLACE FOR COMPLETE AND PROPER INSTALLATION. LUBRICATE BEARING SURFACES OF MOVING PARTS. ADJUST LATCHING AND HOLDING DEVICES FOR PROPER FUNCTION. ADJUST DOOR CONTROL DEVICES TO PROPER SPEED AND POWER. CLEAN EXPOSED SURFACES AND CHECK FOR SURFACE DAMAGE

OPERATING HARDWARE SHALL BE LEVER - TYPE, CENTERED BETWEEN 30"-44" OFF THE FLOOR AND OPERABLE. 5LB. MAX. FORCE.

NO DOORS ARE TO REQUIRE TIGHT GRASPING, PINCHING OR TWISTING OF THE WRIST TO OPERATE.

GLASS
STOREFRONT GLASS PROVIDED UNDER SEPARATE CONTRACT.

DIVISION 09 - FINISHES

GYPSUM WALLBOARD SYSTEM
PERFORM GYPSUM WALLBOARD SYSTEMS WORK IN ACCORDANCE WITH RECOMMENDATIONS OF ASTM C754 AND GA216 UNLESS OTHERWISE SPECIFIED IN THIS SECTION.
1. GA 216 - RECOMMENDED SPECIFICATIONS FOR THE APPLICATION AND FINISHING OF GYPSUM BOARD.
2. ASTM C 754 - INSTALLATION OF STEEL FRAMING MEMBERS TO RECEIVE SCREW-ATTACHED GYPSUM WALLBOARD, BACKING BOARD, OR WATER-RESISTANT BACKING BOARD.

PROVIDE METAL FRAMING MATERIALS IN ACCORDANCE WITH GA 216.
1. STUDS: SCREW-TYPE CEE-SHAPED MINIMUM 20 GAUGE.
2. RUNNERS: MATCH STUDS.
3. FURRING MEMBERS: SCREW-TYPE HAT-SHAPED 20 GAUGE.
4. PROVIDE CHANNELS AND HANGER WIRE IN ACCORDANCE WITH GA 216.
5. FASTENERS AND ANCHORAGES IN ACCORDANCE WITH GA 216.

PROVIDE GYPSUM WALLBOARD MATERIALS IN ACCORDANCE WITH RECOMMENDATIONS OF GA 216.
1. STANDARD GYPSUM BOARDS: 5/8 INCH THICK, MAXIMUM PERMISSIBLE LENGTHS. ENDS SQUARE CUT, TAPERED EDGES.
2. FIRE-RATED GYPSUM BOARDS: UL RATED, 5/8 INCH THICK, MAXIMUM PERMISSIBLE LENGTHS.
3. MOISTURE RESISTANT GYPSUM BOARD:
   a. 5/8 INCH THICK, MAXIMUM PERMISSIBLE LENGTHS. ENDS SQUARE CUT; TAPERED EDGES.
   b. PROVIDE IN WET AREAS, INCLUDING BUT NOT LIMITED TO RESTROOMS AND MOP SINK LOCATIONS.
4. AGGREGATE PORTLAND CEMENT BOARD, 1/2 INCH THICK, WITH POLYMER-COATED, WOVEN-GLASS MESH IN BACK AND FRONT SURFACES.

PROVIDE GYPSUM WALLBOARD ACCESSORIES IN ACCORDANCE WITH GA 216.
1. CORNER BEADS SHALL BE METAL.
2. PROVIDE REINFORCING TAPE, JOINT COMPOUND, ADHESIVE, WATER FASTENERS IN ACCORDANCE WITH GA 216.

FRAMING INSTALLATION:
1. INSTALL MEMBERS TRUE TO LINES AND LEVELS TO PROVIDE SURFACE FLATNESS WITH MAXIMUM VARIATION OF 1/8 INCH IN 10 FEET (1/960) IN ANY DIRECTION
2. METAL STUDS SHALL BE 16 INCHES ON CENTER UNLESS OTHERWISE INDICATED.
3. PARTITION HEIGHTS SHALL BE FULL HEIGHT FROM FLOOR TO ROOF CONSTRUCTION ABOVE AS/OR INDICATED ON THE DRAWINGS.
4. INSTALL DOUBLE STUDS AT DOOR FRAME JAMBS. INSTALL RUNNERS ON EACH SIDE OF OPENING AT FRAME HEAD HEIGHT BETWEEN JAMB STUDS AND ADJACENT STUDS.
5. INSTALL BLOCKING BEHIND DRYWALL FOR SUPPORT OF PLUMBING FIXTURES, TOILET PARTITIONS, WALL CABINETS, TOILET ACCESSORIES, HARDWARE AND ELSEWHERE AS REQUIRED.
6. COORDINATE INSTALLATION OF BUCKS, ANCHORS, BLOCKING, ELECTRICAL, AND MECHANICAL WORK WHICH IS TO BE PLACED IN OR BEHIND PARTITION FRAMING. ALLOW SUCH ITEMS TO BE INSTALLED AFTER FRAMING IS COMPLETE.
7. ERECT WALL FURRING DIRECTLY ATTACHED TO CONCRETE BLOCK AND CONCRETE WALLS.
8. SPACE FURRING CHANNELS MAXIMUM 16 INCHES ON CENTER, NOT MORE THAN 4 INCHES FROM FLOOR AND CEILING BEARING.

BOARD INSTALLATION:
1. ERECT SINGLE LAYER STANDARD GYPSUM BOARD IN DIRECTION MOST PRACTICAL AND ECONOMICAL, WITH ENDS AND EDGES OCCURRING OVER FIRM BEARING.
2. ERECT SINGLE LAYER FIRE-RATED GYPSUM BOARD VERTICALLY, WITH EDGES AND ENDS OCCURRING OVER FRAMING.
3. USE SCREWS WHEN FASTENING GYPSUM BOARD TO METAL FURRING OR FRAMING.

FINISHING:
1. PLACE CORNER BEADS AT EXTERNAL CORNERS. USE LONGEST PRACTICAL LENGTHS. PLACE EDGE TRIM WHERE GYPSUM BOARD ABUTS DISSIMILAR MATERIALS.
2. TAPE, FILL, AND SAND EXPOSED JOINTS, EDGES, CORNERS, OPENINGS, AND FIXTURES, TO PRODUCE SURFACE READY TO RECEIVE SURFACE FINISHES. FEATHER COATS ONTO ADJOINING SURFACES SO THAT CAMBER IS MAXIMUM 1/32 INCH. FINISHING OF TAPING IS NOT REQUIRED ABOVE CEILING LINE.

REMOVE AND REINSTALL DEFECTIVE WORK.

ACOUSTICAL CEILINGS
CEILING SYSTEMS: AS INDICATED IN FINISH SCHEDULE.
1. ASTM C 636 - STANDARD PRACTICE FOR INSTALLATION OF METAL CEILING SUSPENSION SYSTEMS FOR ACOUSTIC TILE AND LAY-IN PANELS.
2. SUSPENSION SYSTEM: HEAVY DUTY, EXCEPT WHERE INTERMEDIATE DUTY IS PERMITTED BY CODE FOR INSTALLATION INDICATED.

INSTALLATION:
1. INSTALL ACOUSTICAL CEILING SYSTEMS IN ACCORDANCE WITH MANUFACTURER'S RECOMMENDATIONS AND ASTM C 636 TO PRODUCE FINISHED CEILING TRUE TO LINES AND LEVELS AND FREE FROM WARPED, SOILED, OR DAMAGED GRID OR LAY-IN PANELS.
2. INSTALL CEILING SYSTEMS IN A MANNER CAPABLE OF SUPPORTING ALL SUPERIMPOSED LOADS, WITH MAXIMUM PERMISSIBLE DEFLECTION OF 1/360 OF SPAN AND MAXIMUM SURFACE DEVIATION OF 1/8 INCH IN 10 FEET (1/960).
3. INSTALL AFTER MAJOR ABOVE-CEILING WORK IS COMPLETE. COORDINATE THE LOCATION OF HANGERS WITH OTHER WORK. ENSURE THE LAYOUT OF HANGERS AND CARRYING CHANNELS ARE LOCATED TO ACCOMMODATE FITTINGS AND UNITS OF EQUIPMENT WHICH ARE TO BE PLACED AFTER THE INSTALLATION OF CEILING GRID SYSTEM(S).
4. WHERE DUCTS OR OTHER EQUIPMENT PREVENT THE REGULAR SPACING OF HANGERS, REINFORCE THE NEAREST ADJACENT HANGERS AND RELATED CARRYING CHANNELS AS REQUIRED TO SPAN THE REQUIRED DISTANCE.
5. HANG INDEPENDENTLY OF WALLS, COLUMNS, DUCTS, PIPES, AND CONDUIT. WHERE CARRYING MEMBERS ARE SPLICED, AVOID VISIBLE DISPLACEMENT OF THE LONGITUDINAL AXIS OR FACE PLANE OF ADJACENT MEMBERS.
6. DO NOT SUPPORT FIXTURES FROM OR ON MAIN RUNNERS OR CROSS RUNNERS IF WEIGHT OF THE FIXTURE CAUSES THE TOTAL DEAD LOAD TO EXCEED THE DEFLECTION CAPABILITY. IN SUCH CASES, SUPPORT FIXTURE LOADS BY SUPPLEMENTARY HANGERS LOCATED WITHIN 6 INCHES OF EACH CORNER, OR SUPPORT THE FIXTURES INDEPENDENTLY.
7. INSTALL EDGE MOLDINGS AT INTERSECTION OF CEILING AND VERTICAL SURFACES USING MAXIMUM LENGTHS, STRAIGHT, TRUE TO LINE, AND LEVEL. MITER CORNERS. PROVIDE EDGE MOLDINGS AT JUNCTIONS WITH OTHER CEILING FINISHES. WHERE BULLNOSE CONCRETE BLOCK CORNERS OCCUR, PROVIDE PREFORMED CLOSERS TO MATCH EDGE MOLDING.
8. FIT ACOUSTIC LAY-IN PANELS IN PLACE, FREE FROM DAMAGED EDGES OR OTHER DEFECTS DETRIMENTAL TO APPEARANCE AND FUNCTION. FIT BORDER UNITS NEATLY AGAINST ABUTTING SURFACES. INSTALL PANELS IN ANY UNBROKEN AREA OF CEILING FROM THE SAME PRODUCT LOT AS INDICATED BY LOT NUMBER ON EACH CARTON.
9. INSTALL LAY-IN PANELS LEVEL IN UNIFORM PLANE AND FREE FROM TWIST, WARP, AND DENTS.

ROOFING
SUMMARY
A. Section Includes:
   1. Adhered PVC membrane roofing system.
   2. Roof insulation.
DEFINITIONS
B. PVC: Thermoplastic polyolefin.
C. Roofing Terminology: See ASTM D 1079 and glossary in NRCA's "The NRCA Roofing and Waterproofing Manual" for definitions of terms related to roofing work in this Section.
PERFORMANCE REQUIREMENTS
D. General Performance: Installed membrane roofing and base flashings shall withstand specified uplift pressures, thermally induced movement, and exposure to weather without failure due to defective manufacture, fabrication, installation, or other defects in construction. Membrane roofing and base flashings shall remain watertight.
E. Material Compatibility: Provide roofing materials that are compatible with one another under conditions of service and application required, as demonstrated by membrane roofing manufacturer based on testing and field experience.
F. Roofing System Design: Provide membrane roofing system that is identical to systems that have been successfully tested by a qualified testing and inspecting agency to resist uplift pressure calculated according to ASCE/SEI 7.
G. Energy Performance: Provide roofing system with initial Solar Reflectance Index not less than 78 when calculated according to ASTM E 1980, based on testing identical products by a qualified testing agency.
SUBMITTALS
H. Product Data: For each type of product indicated.
   1. Product data for roof materials, indicating that roof materials comply with Solar Reflectance Index requirement.
   2. Product data for adhesives and sealants, including printed statement of VOC content.
I. Shop Drawings: For roofing system. Include plans, elevations, sections, details, and attachments to other work.
   1. Base flashings and membrane terminations.
   2. Insulation fastening patterns for corner, perimeter, and field-of-roof locations.
   3. Walkway plan and details.
   4. Proposed watertight temporary tie-off details for the proposed substrate.
   5. Interface with sheet metal components including but not limited to:
      a. Counterflashing
      b. Stack Flashing Assembly
      c. Edge and fascia
      d. Interface with coping assemblies.
      e. Interface with roofing accessories including but not limited to:
         1) Equipment curbs
         2) Roof hatches
         3) Expansion joint assemblies
J. Qualification Data: For qualified Installer and manufacturer. Provide a letter signed by a manufacturer's representative that the roof installer is authorized to install the specified system.
K. Manufacturer Certificates: Signed by roofing manufacturer certifying that roofing system complies with requirements specified in "Performance Requirements" Article.
   1. Submit evidence of compliance with performance requirements.
L. Maintenance Data: For roofing system to include in maintenance manuals.
M. Warranties: Sample Warranty: Copy of roofing-system manufacturer's warranty, stating obligations, remedies, limitations, and exclusions.

PVC ROOFING - ADHERED
A. PVC Sheet: ASTM D 4434/D 4434M, Type III, fabric-reinforced and fabric backed.
   1. Manufacturers: Subject to compliance with requirements, provide products by Duro-Last Roofing, Inc ., or comparable product by one of the following:
      a. Carlisle SynTec Incorporated .
      b. Cooley Engineered Membranes .
      c. Custom Seal Roofing .
      d. Flex Membranes International .
      e. GAF Materials Corporation .
      f. GenFlex Roofing Systems .
      g. Johns Manville .
      h. Mule-Hide Products Co., Inc .
      i. Sarnafil Inc .
      j. Versico Incorporated .
      k. For substitution request, refer to Section "012500 - Substitution Procedures".
   2. Thickness: 60 mils (1.5 mm), nominal.
   3. Exposed Face Color: White.
AUXILIARY MEMBRANE ROOFING MATERIALS
B. General: Auxiliary membrane roofing materials recommended by roofing system manufacturer for intended use, and compatible with membrane roofing.
   1. Liquid-type auxiliary materials shall comply with VOC limits of authorities having jurisdiction.
   2. Adhesives and sealants that are not on the exterior side of weather barrier shall comply with the following limits for VOC content when calculated according to 40 CFR 59, Subpart D (EPA Method 24):
      a. Plastic Foam Adhesives: 50 g/L.
      b. Gypsum Board and Panel Adhesives: 50 g/L.
      c. Multipurpose Construction Adhesives: 70 g/L.
      d. Fiberglass Adhesives: 80 g/L.
      e. Contact Adhesive: 80 g/L.
      f. Other Adhesives: 250 g/L.
      g. Single-Ply Roof Membrane Sealants: 450 g/L.
      h. Nonmembrane Roof Sealants: 300 g/L.
      i. Sealant Primers for Nonporous Substrates: 250 g/L.
      j. Sealant Primers for Porous Substrates: 775 g/L.
C. Sheet Flashing: Manufacturer's standard PVC sheet flashing of same color as sheet membrane.
D. Bonding Adhesive: Manufacturer's standard, water based.
E. Metal Termination Bars: Manufacturer's standard, predrilled stainless-steel or aluminum bars, approximately 1 by 1/8 inch (25 by 3 mm) thick; with anchors.
F. Metal Battens: Manufacturer's standard, aluminum-zinc-alloy-coated or zinc-coated steel sheet, approximately 1 inch wide by 0.05 inch (25 mm wide by 1.3 mm thick), prepunched.
G. Fasteners: Factory-coated steel fasteners and metal or plastic plates complying with corrosion-resistance provisions in FM Approvals 4470, designed for fastening membrane to substrate, and acceptable to membrane roofing system manufacturer.
H. Miscellaneous Accessories: Provide pourable sealers, preformed cone and vent sheet flashings, preformed inside and outside corner sheet flashings, T-joint covers, lap sealants, termination reglets, and other accessories.
ROOF INSULATION
I. General: Preformed roof insulation boards manufactured or approved by PVC membrane roofing manufacturer, selected from manufacturer's standard sizes suitable for application, of thicknesses indicated and that produce FM Approvals-approved roof insulation.
J. Polyisocyanurate Board Insulation: ASTM C 1289, Type II, Class 1, Grade 2, felt or glass-fiber mat facer on both major surfaces.
   1. Thickness or R Value: Insulation system shall have a minimum R-20 (continuous insulation) Long Term Thermal Resistance (LTTR) value as determined in accordance with CAN/ULC-S770 and the corresponding thickness required to meet this minimum requirement by authority of jurisdiction.
K. Provide preformed polyisocyanurate saddles, crickets, tapered edge strips, and other insulation shapes where indicated for sloping to drain. Fabricate to slopes indicated. The configuration of the saddles and crickets must provide a minimum of 1/8 inch per foot slope in all valleys.
   1. For insulation that will be placed using adhesive, board sizes shall not exceed 4 ft. by 4 ft. maximum. Largest appropriate sized approaching, but not exceeding 4 ft. by 4 ft. as appropriate, shall be installed where possible. Using multiple smaller sized sections of insulation where larger sections would be more appropriate shall not be allowed.
INSULATION ACCESSORIES
L. Primer: As required by insulation adhesive manufacturer.
M. Insulation Adhesive:
   1. Polyurethane adhesive acceptable to the roof system manufacturer in order to meet the specified wind uplift resistance. Adhesive shall be compatible with the roof decks, specified insulation, and specified cover board, and shall be acceptable to roof system manufacturer in order to meet wind uplift and warranty requirements.
   2. Adhesives shall be approved by Factory Mutual (FM) and listed in the Factory Mutual Approval Guide for Class 1 fire rating and Class FM 1-90 windstorm rating. Submit manufacturer's recommended pattern to engineering for acceptance.
N. Fasteners: Factory-coated steel fasteners and metal or plastic plates complying with corrosion-resistance provisions in FM Approvals 4470, designed for fastening roof insulation and cover boards to substrate, and acceptable to roofing system manufacturer.
O. Cover Board: ASTM C 1177/C 1177M, glass-mat, water-resistant gypsum substrate, 3/8" minimum, or as required to meet uplift requirement., factory primed.
   1. Products: Subject to compliance with requirements, provide one of the following:
      a. Georgia-Pacific Corporation; DensDeck Prime.
      b. USG: SecuRock

MODULUS ARCHITECTS & LAND USE PLANNING
8220 SAN PEDRO DR NE SUITE 520
ALBUQUERQUE, NEW MEXICO 87113
PHONE (505) 338-1499
FAX (505) 338-1498

STATE OF COLORADO
Stephen Aaron Dunbar
405806
LICENSED ARCHITECT

PROJECT TITLE

TESLA COLLISION CENTER

6951 S. BLACKHAWK ST, ENGLEWOOD, COLORADO 80112

PROJECT MANAGER

DRAWN BY:

ISSUE / REVISION

ISSUE DATE: 02-12-24

SHEET TITLE

ARCHITECTURAL SPECIFICATIONS

SCALE:

JOB NO. 414063

SHEET NUMBER

A10.02

CONSTRUCTION DOCUMENTS

PAINT SPEC NOTE: EQUAL ALTERNATE TO BENJAMIN MOORE IS SHERWIN WILLIAMS. COLORS TO MATCH BENJAMIN MOORE.

PART 1 GENERAL

1.1 SECTION INCLUDES

A. Commercial painting, including surface preparation
1. Interior painting.
2. Exterior painting.

1.2 RELATED SECTIONS - INTERIOR

A. Division 3 - Concrete - Walls and Ceilings, Poured Concrete, Precast Concrete, Unglazed Brick, Cement Board, Tilt-Up, Cast-In-Place including Plaster (Walls, Ceilings, Concrete - (Floors, non-vehicular).

B. Division 4 - Interior Concrete Block.

C. Division 5 - Metal - Galvanized.

D. Division 6 - Wood - Doors, Trim, Paneling.

E. Division 9 - Drywall - (Walls, Ceilings, Gypsum Board and similar items).

1.3 RELATED SECTIONS - EXTERIOR

A. Division 3 - Concrete - Cementitious Siding, Flexboard, Transite Board, Shingles (Non-Roof), Common Brick, Stucco, Tilt-up, Precast, and Poured-in-place Cement.

B. Division 4 - Concrete Block, Floors (Non-Vehicular).

C. Division 5 - Metal - Galvanized, Miscellaneous Iron, Ornamental Iron, Structural Iron and Steel, Ferrous Metal.

D. Division 6 - Wood - Decks, Exterior including pressure treated lumber, Floors (non-Vehicular).

E. Division 7 - Wood - Siding, Trim, Shutters, Sashes, Hardboard-Bare/Primed, Architectural PVC, Plastic, Fiberglass, Azek, Vinyl Siding, EIFS, Synthetic Stucco.

1.4 REFERENCES

A. Green Seal Standard GS-11; May 20, 1993.

B. US Green Building Council, (USGBC) - Green Seal standards for LEED paint credits.

C. Occupational Safety and Health Act (OSHA) - Safety Standards.

D. American National Standards Institute (ANSI) - Performance Standards.

E. Paint Decorating Contractors of America (PDCA) - Application Standard.

F. National Paint and Coatings Association (NPCA) - Gloss Standard.

G. American Society for Testing Materials (ASTM) - Testing Methods.

H. Master Paint Institute (MPI #) - Established paint categories and standards.

I. Ozone Transmission Commission (OTC) - Established levels of Volatile Organic Compounds.

J. SCAQMD 1168 - South Coast Air Quality Management District Rule #1168; October 3, 2003.

K. SSPC (PM1) - Steel Structures Painting Manual, Vol. 1, Good Painting Practice; Society for Protective Coatings; 1993, Third Edition.

L. SSPC (PM2) - Steel Structures Painting Manual, Vol. 2, Systems and Specifications; Society for Protective Coatings; 1995, Seventh Edition.

M. 40 CFR 59, Subpart D - National Volatile Organic Compound Emission Standards for Architectural Coatings; U.S. Environmental Protection Agency; current edition.

1.5 DEFINITIONS

A. Commercial as used in this Section refers to a product well suited for a commercial application.

B. DFT as used in this Section refers to the Dry Film Thickness of the coating.

C. Enamel refers to any acrylic or alkyd (oil) base paint which dries leaving an eggshell, pearl, satin, semi-gloss or high gloss enamel finish.

D. DTM as used in this Section refers to paint that is applied Direct To Metal.

E. LEED as used in this Section refers to Leadership in Energy and Environmental Design. Products listed meet LEED criteria for environmentally safe interior primers, paints and coatings.

F. OTC as used in this Section refers to the Ozone Transmission Commission. OTC has established the following VOC levels for the Northeastern United States. Products shall meet the following OTC limits for VOC's.
1. Interior flat paints: 100 grams per liter or less, per gallon.
2. Interior enamels: 150 grams per liter or less, per gallon.
3. Interior stains: 250 grams per liter or less, per gallon.
4. Interior primers: 200 grams per liter or less, per gallon.
5. Rust preventive coatings: 400 grams per liter or less, per gallon.
6. Dry fog coatings: 400 grams per liter or less, per gallon.
7. Floor coatings: 250 grams per liter or less, per gallon.

G. Premium as used in this Section refers to the best quality product "top of the line".

H. VOC as used in this Section refers to Volatile Organic Compounds found in primers, paints, sealers and stains. The level of VOCs appears after each product listed in the Schedule in grams per liter (g/L).

I. Paints are available in a wide range of sheens or glosses, as measured by a gloss meter from a 60 and/or 85 degree angle from vertical, as a percentage of the amount of light that is reflected. The following terms are used to describe the gloss of our products. The list below is provided for general guidance; refer to the technical data sheet for the actual gloss/sheen level for each product.
1. Flat - Less than 5 Percent.
2. Eggshell - 5 - 20 Percent.
3. Satin - 20 - 35 Percent.
4. Semi-Gloss - 30 - 65 Percent.
5. Gloss - Over 65 Percent.

1.6 SUBMITTALS

A. Submit under provisions of Section 01300 - Administrative Requirements.

B. LEED Certification Product Data:
1. See Section 01000 - Work Covered by Contract Documents.
2. Submittals Required:
a. MRc3 Resource Reuse (LEED Form).
b. MRc4 Recycled Content (LEED Form).
c. MRc5 Local and Regional Materials (LEED Form).
d. EQc4.2 Low Emitting Materials - Paint (VOC Certification Letter).

C. Product Data: Provide a complete list of all products to be used, with the following information for each:
1. Manufacturer's name, product name and/or catalog number, and general product category.
2. Cross-reference to specified paint system(s) that the product is to be used in; include description of each system.

D. Samples: Submit three paper samples, 5 inches by 7 inches (127mm x 178mm) in size, illustrating selected colors for each color and system selected with specified coats cascaded.

E. Manufacturer's Instructions: Indicate special surface preparation procedures.

F. Maintenance Data: Submit data on cleaning, touch-up, and repair of painted and coated surfaces.

1.7 QUALITY ASSURANCE

A. Manufacturer Qualifications: All primary products specified in this section will be supplied by a single manufacturer with a minimum of ten years experience.

B. Installer Qualifications: All products listed in this section are to be applied by a Painting Contractor with a minimum of five years demonstrated experience in surface preparation and field application of the same type and scope as specified.

C. Mock-Up: Provide a mock-up for evaluation of surface preparation techniques and application workmanship.
1. Mock-up areas designated by Architect.
2. Do not proceed with remaining work until workmanship, color, and sheen are approved by Architect.
3. Approved mock-up areas will serve as the standard for remaining Work.
4. Refinish mock-up area as required to produce acceptable Work.

1.8 DELIVERY, STORAGE, AND HANDLING

A. Store products in manufacturer's unopened packaging until ready for installation.

B. Store and dispose of solvent-based materials, and materials used with solvent-based materials, in accordance with requirements of local authorities having jurisdiction.

C. Disposal:
1. Never pour leftover coating down any sink or drain. Use up material on the job or seal can and store safely for future use.
2. Do not incinerate closed containers.
3. For specific disposal or recycle guidelines, contact the local waste management agency or district. Recycle whenever possible.

1.9 PROJECT CONDITIONS

A. Maintain environmental conditions (temperature, humidity, and ventilation) within limits recommended by manufacturer for optimum results. Do not install products under environmental conditions outside manufacturer's recommended limits.

1.10 WARRANTY

A. Inspection of all surfaces to be coated must be done by the manufacturer's representative to insure proper preparation prior to application. All thinners, fillers, primers and finish coatings shall be from the same manufacturer to support a product warranty. Products other than those submitted shall be accompanied by a letter stating its fitness for use and compatibility.

B. At project closeout, provide to the Owner or owner's representative an executed copy of the Manufacturer's standard form outlining the terms and conditions of and any exclusions to their Limited Warranty against Manufacturing Defect.

1.11 EXTRA MATERIALS

A. At project closeout, supply the Owner or owner's representative one gallon of each product for touch-up purposes. Cans shall be clearly marked with color name, number and type of paint.

B. At project closeout, provide the color mixture name and code to the Owner or owner's representative for accurate future color matching.

PART 2 PRODUCTS

INTERIOR

1. Aluminum and Galvanized Metal - Satin Finish - Interior

A.

1st Coat: Primer not Required on Factory Primed Surfaces or Repaint

2nd Coat: Benjamin Moore Interior/Exterior Ultra Spec® D.T.M. Acrylic Low Lustre Enamel HP25, NO COLOR SELECTED , 145 g/L, 141, 153, Qualifies for LEED® v4 Credit, Qualifies for CHPS Low Emitting Credits

3rd Coat: Benjamin Moore Interior/Exterior Ultra Spec® D.T.M. Acrylic Low Lustre Enamel HP25, NO COLOR SELECTED , 145 g/L, 141, 153, Qualifies for LEED® v4 Credit, Qualifies for CHPS Low Emitting Credits

2. Concrete Floor - Satin Finish - Back Room - Interior

A.

1st Coat: Benjamin Moore Interior/Exterior Fresh Start® Primer Multi-Purpose Latex N023, 44 g/L, 6, 17, 17 X-Green, 39, 137, 137 X-Green, Qualifies for LEED® v4 Credit, Qualifies for CHPS low emitting credits

2nd Coat: Benjamin Moore Interior/Exterior Floor & Patio Latex Enamel Low Sheen Finish N122, NO COLOR SELECTED , 45 g/L, Qualifies for LEED® v4 Credit, Qualifies for CHPS Low Emitting Credits

3rd Coat: Benjamin Moore Interior/Exterior Floor & Patio Latex Enamel Low Sheen Finish N122, NO COLOR SELECTED , 45 g/L, Qualifies for LEED® v4 Credit, Qualifies for CHPS Low Emitting Credits

3. Concrete Masonry Units - Semi-Gloss - Interior

A.

1st Coat: Benjamin Moore Interior Ultra Spec® Masonry Interior/Exterior 100% Acrylic Sealer 608, 46 g/L, 3, 3 X-Green, Qualifies for LEED® v4 Credit, Qualifies for CHPS low emitting credits

2nd Coat: Benjamin Moore Interior Ultra Spec® 500 Semi Gloss N539, NO COLOR SELECTED , 0 g/L, 43, 43 X-Green™, 140, 140 X-Green™, 146, 146 X-Green™, Qualifies for LEED® v4 Credit, Qualifies for CHPS Low Emitting Credits, Cradle to Cradle Certified™ Silver

3rd Coat: Benjamin Moore Interior Ultra Spec® 500 Semi Gloss N539, NO COLOR SELECTED , 0 g/L, 43, 43 X-Green™, 140, 140 X-Green™, 146, 146 X-Green™, Qualifies for LEED® v4 Credit, Qualifies for CHPS Low Emitting Credits, Cradle to Cradle Certified™ Silver

4. Exposed Structural Steel, Roof Bar Joists and Metal Deck - Low Lustre Finish - Interior

A.

1st Coat: For First Coat Refer to Technical Data Sheet

2nd Coat: Benjamin Moore Interior/Exterior Ultra Spec® D.T.M. Acrylic Low Lustre Enamel HP25, NO COLOR SELECTED , 145 g/L, 141, 153, Qualifies for LEED® v4 Credit, Qualifies for CHPS Low Emitting Credits

3rd Coat: Benjamin Moore Interior/Exterior Ultra Spec® D.T.M. Acrylic Low Lustre Enamel HP25, NO COLOR SELECTED , 145 g/L, 141, 153, Qualifies for LEED® v4 Credit, Qualifies for CHPS Low Emitting Credits

5. Gypsum Wall Board - Ultra Flat Finish at Sales Area Drywall Ceilings, New - Interior

A.

1st Coat: Benjamin Moore Fresh Start® High-Hiding All Purpose 046, 44 g/L, 6, 17, 17 X-Green, 39, 50, 50 X-Green, 137, 137 X-Green, Qualifies for LEED® v4 Credit, Qualifies for CHPS low emitting credits

2nd Coat: Benjamin Moore Interior WB Ceiling Paint 508, NO COLOR SELECTED , 0 g/L, Qualifies for CHPS Low Emitting Credits

3rd Coat: Benjamin Moore Interior WB Ceiling Paint 508, NO COLOR SELECTED , 0 g/L, Qualifies for CHPS Low Emitting Credits

6. Gypsum Wall Board - Ultra Flat Finish at Sales Area Drywall Ceilings, Repaint (after proper surface prep) - Interior

A.

1st Coat: Benjamin Moore Fresh Start® High-Hiding All Purpose 046, 44 g/L, 6, 17, 17 X-Green, 39, 50, 50 X-Green, 137, 137 X-Green, Qualifies for LEED® v4 Credit, Qualifies for CHPS low emitting credits

2nd Coat: Benjamin Moore Interior WB Ceiling Paint 508, NO COLOR SELECTED , 0 g/L, Qualifies for CHPS Low Emitting Credits

3rd Coat: Benjamin Moore Interior WB Ceiling Paint 508, NO COLOR SELECTED , 0 g/L, Qualifies for CHPS Low Emitting Credits

7. Gypsum Wall Board - Eggshell Finish for General New Walls - Interior

A.

1st Coat: Benjamin Moore Fresh Start® High-Hiding All Purpose 046, 44 g/L, 6, 17, 17 X-Green, 39, 50, 50 X-Green, 137, 137 X-Green, Qualifies for LEED® v4 Credit, Qualifies for CHPS low emitting credits

2nd Coat: Benjamin Moore Interior Regal® Select Eggshell 549, NO COLOR SELECTED , 0 g/L, 44, 44 X-Green™, 138, 138 X-Green™, 144, Qualifies for LEED® v4 Credit, Qualifies for CHPS Low Emitting Credits

3rd Coat: Benjamin Moore Interior Regal® Select Eggshell 549, NO COLOR SELECTED , 0 g/L, 44, 44 X-Green™, 138, 138 X-Green™, 144, Qualifies for LEED® v4 Credit, Qualifies for CHPS Low Emitting Credits

8. Gypsum Wall Board - Eggshell Finish for Repaint (after proper surface prep) - Interior

A.

1st Coat: Benjamin Moore Fresh Start® High-Hiding All Purpose 046, 44 g/L, 6, 17, 17 X-Green, 39, 50, 50 X-Green, 137, 137 X-Green, Qualifies for LEED® v4 Credit, Qualifies for CHPS low emitting credits

2nd Coat: Benjamin Moore Interior Regal® Select Eggshell 549, NO COLOR SELECTED , 0 g/L, 44, 44 X-Green™, 138, 138 X-Green™, 144, Qualifies for LEED® v4 Credit, Qualifies for CHPS Low Emitting Credits

3rd Coat: Benjamin Moore Interior Regal® Select Eggshell 549, NO COLOR SELECTED , 0 g/L, 44, 44 X-Green™, 138, 138 X-Green™, 144, Qualifies for LEED® v4 Credit, Qualifies for CHPS Low Emitting Credits

9. Interior Metal Doors and Frames - Low Lustre Finish - Interior

A.

1st Coat: For First Coat Refer to Technical Data Sheet

2nd Coat: Benjamin Moore Interior/Exterior Ultra Spec® D.T.M. Acrylic Low Lustre Enamel HP25, NO COLOR SELECTED , 145 g/L, 141, 153, Qualifies for LEED® v4 Credit, Qualifies for CHPS Low Emitting Credits

3rd Coat: Benjamin Moore Interior/Exterior Ultra Spec® D.T.M. Acrylic Low Lustre Enamel HP25, NO COLOR SELECTED , 145 g/L, 141, 153, Qualifies for LEED® v4 Credit, Qualifies for CHPS Low Emitting Credits

10. Interior Wood Doors, Jambs, Casings, Touch Up on Owners Fixtures and Misc. Trim - Satin Finish - Interior

A.

1st Coat: Benjamin Moore Interior ADVANCE® WATERBORNE INTERIOR ALKYD PRIMER 790, 44 g/L, 172, Qualifies for CHPS low emitting credits

2nd Coat: Benjamin Moore Interior ADVANCE® Satin 792, NO COLOR SELECTED , 48 g/L, Qualifies for LEED® v4 Credit, Qualifies for CHPS low emitting credits

3rd Coat: Benjamin Moore Interior ADVANCE® Satin 792, NO COLOR SELECTED , 48 g/L, Qualifies for LEED® v4 Credit, Qualifies for CHPS low emitting credits

11. Metal, Wood, Galvanized Metal - Semi-Gloss Finish - Interior

A.

1st Coat: For First Coat Refer to Technical Data Sheet

2nd Coat: Benjamin Moore Interior/Exterior Ultra Spec® D.T.M. Acrylic Semi Gloss Enamel HP29, NO COLOR SELECTED , 147 g/L, 141, 153, Qualifies for LEED® v4 Credit, Qualifies for CHPS Low Emitting Credits

3rd Coat: Benjamin Moore Interior/Exterior Ultra Spec® D.T.M. Acrylic Semi Gloss Enamel HP29, NO COLOR SELECTED , 147 g/L, 141, 153, Qualifies for LEED® v4 Credit, Qualifies for CHPS Low Emitting Credits

EXTERIOR

1. CMU's - Smooth Finish - Exterior

A.

1st Coat: Benjamin Moore Ultra Spec Hi-Build Masonry Block Filler 571, 45 g/L, 4, 4 X-Green™, Qualifies for LEED® v4 Credit, Qualifies for CHPS Low Emitting Credits

2nd Coat: Benjamin Moore Exterior Texcrete®WB Acrylic Masonry Waterproofer Smooth Finish 3194, NO COLOR SELECTED , 94.2 g/L

3rd Coat: Benjamin Moore Exterior Texcrete®WB Acrylic Masonry Waterproofer Smooth Finish 3194, NO COLOR SELECTED , 94.2 g/L

2. Concrete Tilt-up, Panels, Stucco and EFIS - Smooth Finish - Exterior

A.

1st Coat: No first coat needed

2nd Coat: Benjamin Moore Exterior Texcrete®WB Acrylic Masonry Waterproofer Smooth Finish 3194, NO COLOR SELECTED , 94.2 g/L

3rd Coat: Benjamin Moore Exterior Texcrete®WB Acrylic Masonry Waterproofer Smooth Finish 3194, NO COLOR SELECTED , 94.2 g/L

2.1 MANUFACTURERS

A. Acceptable Manufacturer: Benjamin Moore and Co., which is located at: 101 Paragon Dr Montvale, NJ 07645; Toll Free Tel: 866-708-9181; Email: info@benjaminmoore.com; Web: www.benjaminmoore.com
1. In March 2008, Benjamin Moore finalized the purchase of select assets of Insl□x Products Corporation, including Insl□x®, Coronado®, and Lenmar®

2.2 LEED CRITERIA

A. LEED Version 3 - 2009: EQ CR4.2 Low Emitting Materials: 1 Credit - Paint.
1. All architectural paints and coatings used must meet the VOC limits of Green Seal Standard GS-11, 1993.
2. Interior: 50 g/l VOC or less for Flats, 150 g/l VOC for Non Flats, and 200 g/l or less for primer sealers.
3. Anti-Corrosive Coatings GC-03, 1997: Interior 250 g/l VOC or less any sheen.
4. Clear wood finishes, floor coatings, stains, and shellacs applied to interior elements: District (SCAQMD) Rule 1113, Architectural Coatings, rules in effect on January 1, 2004.
5. Clear wood finishes: varnish 350 g/L; lacquer 550 g/L; Floor coatings; 100 g/L, waterproofing sealers 250 g/L; sanding sealers 275 g/L; Shellacs: Clear 730 g/L; pigmented 550 g/L; Stains: 250 g/L.

B. LEED Version 4:
1. All interior paints and coatings wet-applied on site must meet the applicable VOC limits of the California Air Resources Board (CARB) 2007, Suggested Control Measure (SCM) for Architectural Coatings, or the South Coast Air Quality Management District (SCAQMD) Rule 1113, effective June 3, 2011 (50g/l or less for interior flats, 100 g/l or less for non-flats, 150 g/l or less for non-flats high gloss).
2. Ninety percent of all interior paints and coatings must be tested and determined compliant in accordance with California Department of Public Health (CDPH) Standard Method v1.1-2010.

2.3 MATERIALS - GENERAL

A. Volatile Organic Compound (VOC) Content:
1. Provide coatings that comply with the most stringent requirements specified in the following:
a. 40 CFR 59, Subpart D-National Volatile Organic Compound Emission Standards for Architectural Coatings.
b. Determination of VOC Content: Testing and calculation in accordance with 40 CFR 59, Subpart D (EPA Method 24), exclusive of colorants added to a tint base and water added at project site; or other method acceptable to authorities having jurisdiction.

B. Compatibility: Provide materials that are compatible with one another and the substrates indicated under conditions of service and application, as demonstrated by manufacturer based on testing and field experience.

2.4 MIXING AND TINTING

A. Except where specifically noted in this section, all paint shall be ready-mixed and pre-tinted. Agitate all paint prior to and during application to ensure uniform color, gloss, and consistency.

B. Thinner addition shall not exceed manufacturer's printed recommendations. Do not use kerosene or other organic solvents to thin water-based paints.

C. Where paint is to be sprayed, thin according to manufacturer's current guidelines.

PART 3 EXECUTION

3.1 EXAMINATION

A. The Contractor shall review the product manufacturer's special instructions for surface preparation, application, temperature, re-coat times, and product limitations.

B. The Contractor shall review product health and safety precautions listed by the manufacturer.

C. The Contractor shall be responsible for enforcing on site health and safety requirements associated with the Work.

D. Do not begin installation until substrates have been properly prepared.

E. Ensure that surfaces to receive paint are dry immediately prior to application.

F. Ensure that moisture-retaining substrates to receive paint have moisture content within tolerances allowed by coating manufacturer. Where exceeding the following values, promptly notify Architect and obtain direction before beginning work.
1. Concrete and Masonry: 3-5 percent. Allow new concrete to cure a minimum of 28 days.
2. Exterior Wood: 17 percent.
3. Interior Wood: 15 percent.
4. Interior Finish Detail Woodwork, Including Trim, and Casework: 10 percent.
5. Plaster and Gypsum: 15 percent.
6. Concrete Slab-On-Grade: Perform calcium chloride test over 24 hour period or other acceptable test to manufacturer. Verify acceptable moisture transmission and pH levels.

G. Examine surfaces to receive coatings for surface imperfections and contaminants that could impair performance or appearance of coatings, including but not limited to, loose primer, rust, scale, oil, grease, mildew, algae, or fungus, stains or marks, cracks, indentations, or abrasions.

H. Correct conditions that could impair performance or appearance of coatings in accordance with specified surface preparation procedures before proceeding with coating application.

3.2 PREPARATION - GENERAL

A. Clean surfaces thoroughly prior to coating application.

B. Do not start work until surfaces to be finished are in proper condition to produce finished surfaces of uniform, satisfactory appearance.

C. Stains and Marks: Remove completely, if possible, using materials and methods recommended by coating manufacturer; cover stains and marks which cannot be completely removed with isolating primer or sealer recommended by coating manufacturer to prevent bleed-through.

D. Remove Mildew, Algae, and Fungus using materials and methods recommended by coating manufacturer.

E. Remove dust and loose particulate matter from surfaces to receive coatings immediately prior to coating application.

F. Remove or protect adjacent hardware, electrical equipment plates, mechanical grilles and louvers, lighting fixture trim, and other items not indicated to receive coatings.

G. Move or protect equipment and fixtures adjacent to surfaces indicated to receive coatings to allow application of coatings.

H. Protect adjacent surfaces not indicated to receive coatings.

I. Prepare surfaces in accordance with manufacturer's instructions for specified coatings and indicated materials, using only methods and materials recommended by coating manufacturer.

3.3 SURFACE PREPARATION

A. Architectural Coatings
1. Interior
a. New Drywall
1) When joint cement and/or patching materials are thoroughly dry, lightly sand any rough areas with a fine grit paper (180-220 grit)
2) Wipe as much surface dust as possible - best achieved with a soft sponge and warm water
b. New Plaster
1) New plaster should be allowed to fully cure - 30 days on average
a) Cured plaster should be hard, have a slight sheen and maximum pH of 10; Soft, porous or powdery plaster indicates improper cure.
2) Using a putty knife, carefully scrape off any surface protrusions
3) Clean surfaces - best achieved with a mild cleaner mixed with warm water and a soft sponge
c. Previously Painted Surfaces
1) Wash off dirt, grease and oil buildup with a mild cleaner mixed with warm water and a soft sponge. Rinse thoroughly with warm water. Remove loose paint and powdery substances by scraping or sanding**. Patch holes and cracks with spackling or patching compound. Allow to dry, then sand smooth. For glossy or non-porous surfaces , lightly sand to a dull finish or use an abrasive cleanser. Remove sanding dust or cleanser residue.

** If you scrape, sand, or remove old paint, you may release lead dust. LEAD IS TOXIC. EXPOSURE TO LEAD DUST CAN CAUSE SERIOUS ILLNESS, SUCH AS BRAIN DAMAGE, ESPECIALLY IN CHILDREN. PREGNANT WOMEN SHOULD ALSO AVOID EXPOSURE. Wear a NIOSH approved respirator to control lead exposure. Clean up carefully with a HEPA vacuum and a wet mop. Before you start, find out how to protect yourself and your family by contacting the National Lead Informational Hotline at 1-800-424-LEAD or log on to www.epa.gov/lead

2. Exterior
a. Wood
1) Pressure Treated
a) Let PTW dry out for anywhere from 1-6 months. The moisture content should be checked in multiple places before coating. A moisture level of 12% is ideal.
2) Other Wood Species (including PTW)
a) Clean thoroughly to remove dirt, mold and any mildew then allow to dry for several days. Ideally, re-check to moisture levels Remove mil-glaze either mechanically with the grain using 60-80 grit sand paper blower or using a chemical cleaner that is specific to removing mil-glaze and opening the woodgrain. Dust from sanding should be swept or blown away with a leaf blower.
b. Wood Decking
1) Aged Wood (Uncoated)
a) Identified by graying of the wood, dead wood fiber and cracking.
1) UV rays from the sun will have broken down the wood fibers. Cleaning and renewing the surface can be accomplished with Benjamin Moore 316 Restore. It is designed to remove dead surface fiber and any dirt and contamination. Follow this with an application of Benjamin Moore 317 Brighten to neutralize the Restorer and bring the wood back to its original color tone. Once the surface has dried, sand with 80-grit paper along the grain to remove any raised or loose fibers.
c. Aged Wood (Previously Coated)
a) Decks that are older and has multiple coats of stain or sealers, must be stripped to a sound surface. You have two options for this task.
1) You can sand the deck with a mechanical sander like the OnFloor Prep 16 machine (available at your local Benjamin Moore Retailer), or use an orbital sander available at your local rental store.
2) Use Benjamin Moore 315 Remove to eliminate the old coatings. Follow that with an application of 317 Brighten, which neutralizes the Remove and brightens the wood to its original color. Once dried, the surface should be lightly sanded with 80 grit sandpaper before its ready to accept any new coating.
a) When using chemical strippers or cleaners, thoroughly water all vegetation around the area in advance and protect plants with a tarp.

Benjamin Moore Deck Prep Products: Multi-Purpose Cleaner (N318), Brightener and Neutralizer (317), Restore (N316), Remove (315), and Composite Deck Cleaner (313)

d. Masonry
a) Fresh Smooth Poured or Pre-cast Concrete and Stucco
New masonry should cure 30 days prior to application of the sealer / coating system and have a pH of 10 or less. Thoroughly clean the surface with trisodium phosphate mixture or similar. Remove efflorescence, a white powder that forms on moist concrete, by wire brushing.
b) Cured Smooth Poured or Pre-cast Concrete and Stucco
Surface must be clean and sound, free of chalk, loose masonry, peeling paint, form oils, mildew, and bleeding stains. Repair any cracks or blemishes in your wall with concrete patch. Follow the directions to mix up the concrete patch mixture. Fill holes and use a trowel to smooth the patch to match the surface of the wall. Thoroughly clean the surface with trisodium phosphate mixture or similar. Previously painted areas should be scraped and wire-brushed to remove any loose areas. Glossy areas should be dulled by mechanical abrasion.
e. Vinyl & Vinyl Composite Siding
a) Ensure that the surface is properly cleaned and in good condition. For colors that are safe for use on these substrates, use approved Vinyl Select colors.
1) Use a primer designed to adhere to non-porous surfaces such as Fresh Start® High-Hiding All Purpose Primer (046)
f. PVC Trim (Azek, Kleer, etc.)
a) Remove oil, grease, dirt, etc. then lightly sand to a dull finish
1) Use a primer designed to adhere to non-porous surfaces such as Fresh Start® High-Hiding All Purpose Primer (046)
g. Ferrous Metal
a) Solvent cleaning to remove oil, grease, dirt, soil and other similar organic compounds. Solvent cleaning may also be used to remove old paint by the use of paint removers or alkaline paint strippers. Inorganic compounds such as chlorides, sulfates, weld flux, rust and mill scale are not removed by cleaning with organic solvents.
b) Hand Tool Cleaning to remove all loose mill scale, loose rust, loose paint and other loose foreign material. Types of tools used include: non-woven abrasive hand pads, wire brushes, and scrapers
h. Galvanized Metal
a) Solvent Cleaning to remove oil/grease contamination with Corotech® Oil & Grease Emulsifier V600 or Corotech® Citrus Based Cleaner V610. After cleaning, shiny galvanized must be de-glossed with very fine sandpaper or a synthetic steel wool pad to promote adhesion.

COPYRIGHT 2021 MODULUS ARCHITECTS
C:\Users\ctorres.MODULUSARCHITE\Documents\414063-NA-US-CO-ENGLEWOOD-TESLA-COLLISION CENTER_ctorresZXELP.rvt
2/14/2024 4:17:17 PM

TESLA COLLISION CENTER

CONSTRUCTION DOCUMENTS

MODULUS ARCHITECTS & LAND USE PLANNING
8220 SAN PEDRO DR NE SUITE 520
ALBUQUERQUE, NEW MEXICO 87113
PHONE (505) 338-1499
FAX (505) 338-1498

STATE OF COLORADO
Stephen Aaron Dunbar
405806
LICENSED ARCHITECT

PROJECT TITLE

TESLA COLLISION CENTER

6951 S. BLACKHAWK ST, ENGLEWOOD, COLORADO 80112

PROJECT MANAGER

DRAWN BY:

ISSUE / REVISION

ISSUE DATE: 02-12-24

SHEET TITLE

ARCHITECTURAL SPECIFICATIONS

SCALE:

JOB NO. 414063

SHEET NUMBER

A10.03

COPYRIGHT 2021 MODULUS ARCHITECTS
C:\Users\ctorres.MODULUSARCHITEC\Documents\414063-NA-US-CO-ENGLEWOOD-TESLA-COLLISION CENTER_ctorresZXELP.rvt
2/14/2024 4:17:18 PM
TESLA COLLISION CENTER

OVERHEAD DOORS

SUMMARY

Section Includes Manufacturers' Spec Information for the following Preferred Overhead Door Options. Deviations/ Alternates are to be submitted to Tesla for review and approval prior to ordering.

1. Assa Abloy Model 3552
2. Overhead Door Company Model 521

ASSA ABLOY

1.1 SECTION INCLUDES
- A. Aluminum Doors
- B. Track and Framing
- C. Hardware

1.2 RELATED SECTIONS

SECTION 08360 SECTIONAL OVERHEAD DOORS

Tesla, Inc - 4.21.2021

- A. Section 04810 - Unit Masonry Assemblies: Prepared opening in masonry.
- B. Section 05500 - Metal Fabrications: - Steel framed door openings.
- C. Section 06100 - Rough Carpentry: Wood framing and blocking for door opening.
- D. Section 07900 - Joint Sealers: Perimeter sealant and backup materials.
- E. Section 08710 - Door Hardware: Cylinder locks.
- F. Section 11150 - Parking Control Equipment: Remote door control.
- G. Division 16 Sections: Electrical service and connections for powered operators.

1.3 REFERENCES
- A. ASTM A 653/A 653M - Specification for Steel Sheet, Zinc-Coated (Galvanized) or Zinc-Iron Alloy-Coated (Galvannealed) by the Hot-Dip Process.
- B. ASTM B 209/209M - Specification for Aluminum and Aluminum-Alloy Sheet and Plate.
- C. ASTM B 221/221M - Specification for Aluminum and Aluminum-Alloy Extruded Bars, Rods, Wire, Profiles and Tubes.
- D. ANSI/DASMA 102-2011.

1.4 SUBMITTALS
- A. Submit under provisions of Section 01300.
- B. Product Data: Manufacturer's data sheets on each product to be used, including:
  1. Preparation instructions and recommendations.
  2. Storage and handling requirements and recommendations.
  3. Installation methods.
  4. Operation and maintenance data.
  5. Nameplate data and ratings for motors.
- C. Shop Drawings: Include opening dimensions and required tolerances, connection details, anchorage spacing, hardware locations, and installation details.
- D. Selection Samples: For each finish product specified, two complete sets of color chips representing manufacturer's full range of available colors and patterns.
- E. Verification Samples: For each finish product specified, two samples, minimum size 6 inches (150 mm) square, representing actual product, color, and patterns.

1.5 WIND PERFORMANCE REQUIREMENTS
- A. Design doors to withstand positive and negative wind loads as calculated in accordance with applicable governing building codes.

1.6 QUALITY ASSURANCE
- A. Manufacturer Qualifications: Company specializing in manufacturing the types of doors specified in this section with minimum five years documented experience.
- B. Installer Qualifications: Installation to be by qualified dealer in accordance with the manufacturer's installation instructions.

1.7 DELIVERY, STORAGE, AND HANDLING
- A. Store products in manufacturer's unopened packaging until ready for installation.

1.8 PROJECT CONDITIONS
- A. Maintain environmental conditions (temperature, humidity, and ventilation) within limits recommended by manufacturer for optimum results. Do not install products under environmental conditions outside manufacturer's absolute limits.

1.9 WARRANTY
- A. 1-year limited warranty on materials and workmanship.
- B. 5-year limited warranty on finish.

PART 2 PRODUCTS

2.1 MANUFACTURERS
- A. Acceptable Manufacturer: ASSA ABLOY Entrances Systems ; 6600 West WT Harris Blvd, Charlotte, NC 28269
- B. National Accounts Group
  Email: servicateam.na.aaes@assaabloy.com
  Phone: 704-808-441
  Website: www.assaabloyentrance.com/US
  Contact - Ross Merkling - ross.merkling@assaabloy.com 704-221-2068
  Stephanie Correa - Stephanie.correa@assaabloy.com 609-618-0587
- C. Substitutions: Not permitted.

2.2 OVERHEAD DOORS - GENERAL
- A. Provide each door with door sections, brackets, tracks, counterbalance mechanisms and hardware to suit the opening and headroom available.
- B. Hardware:
  1. Minimum of 14 gauge galvanized steel hinges and 13 gauge galvanized steel track brackets.
  2. Rollers have 10 ball bearings with casehardened inner and outer races.
  3. Sliding end stile locking device provided with spring-loaded bolt for inside operation only.
  4. Doors 16 feet 4 inches (5102 mm) and wider provided with double end hinges and stiles and long stem rollers.
- C. Track: 3 inches (76 mm) as required.
  1. Vertical Track:
     a. 3 inch vertical track 12-gauge minimum galvanized steel inclined using adjustable tapered reverse angle to assure a weather tight closure at the jambs.
  2. Horizontal tracks
     a. 3 inch 12-gauge minimum galvanized steel, reinforced with 11-gauge galvanized steel angles
  3. Provide standard lift track as indicated.
  4. Provide vertical lift track as indicated.
  5. Provide high lift track as indicated.
  6. Provide follow-the- roof-pitch tracks as indicated.
  7. Provide low headroom tracks as indicated.
- D. Spring Counterbalance: Torsion springs for door counter-balance mounted on a continuous cross header shaft. Springs to be oil tempered, helical wound and custom computed for each door. Cable drums to be die cast aluminum. Galvanized lift cable to provide minimum safety factor of five to one. Springs to comply with ANSI/DASMA 102-2011 as follows:
  1. High Cycle Spring: 100,000 cycles.
- E. Handle: Galvanized steel step plate/lift handle provided on inside and outside of bottom section.
- F. Lock: Standard interior sliding end stile lock with hole to receive padlock.
- G. Weather stripping: Perimeter seal for header and jambs.
- H. Mounting: Continuous reverse angle mounting for steel jambs.
- I. Mounting: Bracket mounting for wood jambs.

2.3 ALUMINUM DOORS
- A. ASSA ABLOY 3552 (formerly Model 3550) commercial aluminum full-view door.
  1. Door Size: As indicated on the Drawings.
  2. Door Sections: 2 inches (51 mm) thick.
     a. Rails and stiles extruded from 6063-T6 aluminum to produce a door thickness of 2 inches (51 mm).
     b. Center stiles to be 2-3/4 inches (70 mm).
     c. End stiles to be 3-3/8 inches (86 mm).
     d. Top rails to be 3-7/8 inches (98 mm)
     e. Intermediate rails to be 3-3/4 inches (95 mm) per pair.
     f. Bottom rails to be 3-7/8 inches (98 mm).
     g. All stiles and rails to be secured with 5/16 inch (8 mm) diameter through rods.
  3. Standard Door Finish Options:
     a. All aluminum rails and stiles to be a Class 1 clear anodized finish.
  4. Glazing Panels
     a. Glazed Panels: 1/2 inch (12.7 mm) overall insulated double pane 1/8" (3 mm) Tempered glass panels.

2.4 HOIST-TYPE DOOR OPERATORS
1. Industrial-Duty Operator: Industrial-Duty Hoist Operators, continuous-duty, high-starting torque motor with overload protection and emergency chain hoist with electric interlock.
2. Option 1: Lift Master Model: H. - Standard Speed Operation
   a. Motor Specification: 115/230V 60 Hz, single phase, 1/2 HP.
   b. Motor Control and Enclosure: Logic 5.0. UL- approved microprocessor. Select one of 7 wiring types. Maintenance alert diagnostic system, programmable Timer-to-Close with timer defeat input, mid-stop programming capabilities and maximum run timer providing motor overrun protection. NEMA 1 enclosure integral to operator conforming to ANSI/NEMA ICS 6.
      1) Radio Receiver: Logic 5.0 on-board, 3-channel receiver with external antenna. Accepts Security+ 2.0 Rolling Code Technology remote controls and trinary DIP switch remote controls, with memory up to 30, 3- button remote controls or 90 single-button remote controls plus 30 wireless keypads, or an unlimited number of trinary DIP switch remote controls. Tri-band frequency (310/315/390 MHz) sends multiple radio signals to bypass radio interference.
      c. 3-Button Control Station: Open/close/stop functionality. NEMA Type 1. Maintenance alert indicator for routine door and operator maintenance.
      1)
      d. Door Drive: Full No. 50 roller chain. Electrically interlocked, floor level disconnect and chain hoist for manual operation.
   1. Primary Entrapment Protection Devices:
      a. Monitored Photo Sensors:
         1) NEMA 1. CPS-U. Non-contact, infrared beam system
            - **2) Entrapment Protection:**
              - Required for momentary contact, includes radio control operation.
              - Pneumatic sensing edge up to 18 feet (5.5 m) wide. Constant contact only complying with UL 325/2010.
              - Electric sensing edge monitored to meet UL 325/2010.
              - Photoelectric sensors monitored to meet UL 325/2010.
            - **3) Operator Controls:**
              - Push-button and key operated control stations with open, close, and stop buttons.
              - Interior: Push button control station
              - Exterior: Key operated control station
              - Surface mounting.
            - **Special Operation:**
              - Vehicle detector operation.
              - Radio control operation.
              - Door timer operation.
   3. Option 2: RSH Manaras-Opera - Rapido: H. - Increased Speed Operation
      a. Motor**:** To be rated 1 HP, Volts, Phase, 60Hz high starting torque, continuous-duty, three phase switchless motor, open drip proof, protected against overload.
      b. Reduction**:** First step in reduction to be 5L/BX section cogged V-belt drive, additional step by #41 chain and sprockets giving an output shaft speed of 88 rpm. Input steel shaft to be a minimum of 3/4" (19.05mm) in diameter and supported by cast iron flanged pillow block bearings. Output steel shaft to be a minimum of 1" (25.4mm) in diameter with 1/4" keyway and supported by cast iron flanged pillow block bearings.
      c. Drive: Door to be driven by a #50 roller chain with sprockets selected for an opening door travel between 12" (304.8mm) per second to 24" (609.6mm) per second.
      d. Clutch: To be friction type, positioned on input shaft, adjustable from outside.
      e. Brake: To be an electrically activated insulated drum-band type solenoid brake.
      f. Manual Operation **:** To be by a chain hoist with electrical cut-off and floor level engagement device for manual operation. Hoist on right standard.
      g. Electrical Enclosure: All electrical components to be in a NEMA 1 enclosure. The enclosure's cover to be hinged.
      h. Limit Switches: To be rotary-type with oil-impregnated steel cams, commercial grade switches. Systems to be enclosed in electrical control box, and limit shaft to be supported in frame by self- lubricating bronze bushings. System to be provided with Accu-cam® precise and quick one-handed adjustment feature. Limit switches to remain in time when there is a manual operation or after the motor has been removed. Designed to prevent any lever breakage when limits have been exceeded during manual operation.
      i. Corrosion Protection: Frame and control enclosure to be protected by baked on, long lasting enamel finish. Polymer control box cover. Internal shafts to be protected by yellow chromate coating.

2.5 FABRICATION
- A. Aluminum Doors.
  1. Standard Maximum Width: Amarr 3552 (formerly Model 3550)
     a. 24 feet 2 inches (7.4m) widths for doors with aluminum or 1/8" glass panels.
     b. 20 feet 2 inches wide (6.2m) for doors with 1/2" insulated double pane glass panels.
  2. Aluminum struts (truss bars): Provide struts that do not block the viewable area of glazed panels on all Amarr 3552 doors 16 feet 4 inches (5.0m) and wider to prevent deflection of no more than 1/120 of the spanned width when in the open position.
  3. Standard Maximum Height: Amarr 3552 (formerly Model 3550)
     a. 18 feet 1 inch (4.9m) height.

PART 3 EXECUTION

3.1 EXAMINATION
- A. Do not begin installation until substrates have been properly prepared.
- B. Verify wall openings are ready to receive work and opening dimensions and tolerances are within specified limits.

3.2 PREPARATION
- A. Clean surfaces thoroughly prior to installation.
- B. Prepare opening to permit correct installation of door unit to perimeter air and vapor barrier seal.

3.3 INSTALLATION
- A. Install in accordance with manufacturer's instructions. Doors to be interior face mounted on a prepared surface.
- B. Anchor assembly to wall construction and building framing without distortion.
- A. Securely brace door tracks suspended from structure. Secure tracks to structural members or solid backing only.
- C. Fit and align door assembly, tracks and operating hardware.
- D. Install perimeter weatherstripping.
- E. Adjust door assembly to smooth operation and in full contact with weatherstripping.

3.4 CLEANING
- A. Clean doors, frames and glass.
- B. Remove labels and visible markings.

3.5 PROTECTION
- A. Protect installed products until completion of project.
- B. Touch-up, repair or replace damaged products before Substantial Completion.

END OF ASSA ABLOY SECTION

OVERHEAD DOOR COMPANY

PART 1 GENERAL

1.1 SECTION INCLUDES
- A. Glazed Aluminum Sectional Overhead Doors.
- B. Electric Operators and Controls.
- C. Operating Hardware, tracks, and support.

1.2 RELATED SECTIONS
- A. Section 03300 - Cast-In-Place Concrete: Prepared opening in concrete. Execution requirements for placement of anchors in concrete wall construction.
- B. Section 04810 - Unit Masonry Assemblies: Prepared opening in masonry. Execution requirements for placement of anchors in masonry wall construction.
- C. Section 05500 - Metal Fabrications: Steel frame and supports.
- D. Section 06114 - Wood Blocking and Curbing: Rough wood framing and blocking for door opening.
- E. Section 07900 - Joint Sealers: Perimeter sealant and backup materials.
- F. Section 08710 - Door Hardware: Cylinder locks.
- G. Section 09900 - Paints and Coatings: Field painting.
- H. Section 11150 - Parking Control Equipment: Remote door control.
- I. Section 16130 - Raceway and Boxes: Empty conduit from control station to door operator.
- J. Section 16150 - Wiring Connections: Electrical service to door operator.

1.3 REFERENCES
- A. ANSI/DASMA 102 - American National Standard Specifications for Sectional Overhead Type Doors.

1.4 DESIGN / PERFORMANCE REQUIREMENTS
- A. Wind Loads: Design and size components to withstand loads caused by pressure and suction of wind acting normal to plane of wall as calculated in accordance with applicable code.
  1. Design pressure of _____ lb/sq ft (_____kPa).
- B. Wiring Connections: Requirements for electrical characteristics.
  1. 115 volts, single phase, 60 Hz.
  2. 230 volts, single phase, 60 Hz.
  3. 230 volts, three phase, 60 Hz.
  4. 460 volts, three phase, 60 Hz.
- C. Single-Source Responsibility: Provide doors, tracks, motors, and accessories from one manufacturer for each type of door. Provide secondary components from source acceptable to manufacturer of primary components.

1.5 SUBMITTALS
- A. Submit under provisions of Section 01300.
- B. Product Data: Manufacturer's data sheets on each product to be used, including:
  1. Preparation instructions and recommendations.
  2. Storage and handling requirements and recommendations.
  3. Installation methods.
- C. Shop Drawings: Indicate plans and elevations including opening dimensions and required tolerances, connection details, anchorage spacing, hardware locations, and installation details.
- D. Manufacturer's Certificates: Certify products meet or exceed specified requirements.
- E. Operation and Maintenance Data.

1.6 QUALITY ASSURANCE
- A. Manufacturer Qualifications: Company specializing in manufacturing products specified in this section with minimum five years documented experience.
- B. Installer Qualifications: Authorized representative of the manufacturer with minimum five years documented experience.
- C. Products Requiring Electrical Connection: Listed and classified by Underwriters Laboratories, Inc. acceptable to authority having jurisdiction as suitable for purpose specified.

1.7 DELIVERY, STORAGE, AND HANDLING
- A. Store products in manufacturer's unopened labeled packaging until ready for installation.
- B. Protect materials from exposure to moisture until ready for installation.
- C. Store materials in a dry, ventilated weathertight location.

1.8 PROJECT CONDITIONS
- A. Pre-Installation Conference: Convene a pre-installation conference just prior to commencement of field operations, to establish procedures to maintain optimum working conditions and to coordinate this work with related and adjacent work.

PART 2 PRODUCTS

2.1 MANUFACTURERS
- A. Acceptable Manufacturer: Overhead Door Corp., 2501 S. State Hwy, 121, Suite 200, Lewisville, TX 75067. ASD. Tel. Toll Free: (800) 275-3290. Phone: (469) 549-7100. Fax: (972) 906-1499. Web Site: www.overheaddoor.com . E-mail: sales@overheaddoor.com
- B. Substitutions: Not permitted.
- C. Requests for substitutions will be considered in accordance with provisions of Section 01600.

2.2 GLAZED ALUMINUM SECTIONAL OVERHEAD DOORS
- A. Glazed Sectional Overhead Doors: 521 Series Aluminum Doors by Overhead Door Corporation.
  1. Door Assembly: Stile and rail assembly secured with 1/4 inch (6 mm) diameter through rods.
     a. Panel Thickness: 1-3/4 inches (44 mm).
     b. Center Stile Width: 2-11/16 inches (68 mm)
     c. End Stile Width: 3-5/16 inches (84 mm)
     d. Intermediate Rail Pair Width: 3-11/16 inches (94 mm).
     e. Top Rail Width:
        \k1)3-3/4 inches (95 mm).
     f. Bottom Rail Width:
        \k1)4-1/2 inches (114 mm).
     g. Aluminum Panels: 0.050 inch (1.3 mm) thick, aluminum.
     h. Stiles and Rails: 6063 - T6 aluminum.
     i. Springs:
        \k1)100,000 cycles.
     j. Glazing:
  2. Finish and Color:
     a. Anodized Finish: Clear anodized.
  3. Windload Design: Provide to meet the Design/Performance requirements specified.
  4. Hardware: Galvanized steel hinges and fixtures. Ball bearing rollers with hardened steel races.
  5. Lock: Interior galvanized single unit.
  6. Weatherstripping:
     a. Flexible bulb-type strip at bottom section.
     b. Flexible Jamb seals.
     c. Flexible Header seal.
  7. Track: Provide track as recommended by manufacturer to suit loading required and clearances available.

\k8.Manual Operation: Chain hoist.

  9. Electric Motor Operation: RSX
     a. Provide UL listed electric operator, size and type as recommended by manufacturer to move door in either direction at 1 foot per second. Operator shall meet UL325/2010 requirements for continuous monitoring of safety devices.
     b. Entrapment Protection: Required for momentary contact, includes radio control operation.
        1) Pneumatic sensing edge up to 18 feet (5.5 m) wide. Constant contact only complying with UL 325/2010.
        2) Electric sensing edge monitored to meet UL 325/2010.
        3) Photoelectric sensors monitored to meet UL 325/2010.
     c. Operator Controls:
        \k1)Push-button and key operated control stations with open, close, and stop buttons.
           (a) Interior: Push button control station
           (b) Exterior: Key operated control station
        \k2)Surface mounting.
     d. Special Operation:
        1) Vehicle detector operation.
        2) Radio control operation.
        3) Door timer operation.

PART 3 EXECUTION

3.1 EXAMINATION
- A. Do not begin installation until openings have been properly prepared.
- B. Verify wall openings are ready to receive work and opening dimensions and tolerances are within specified limits.
- C. Verify electric power is available and of correct characteristics.
- D. If preparation is the responsibility of another installer, notify Architect of unsatisfactory preparation before proceeding.

3.2 PREPARATION
- A. Clean surfaces thoroughly prior to installation.
- B. Prepare surfaces using the methods recommended by the manufacturer for achieving the best result for the substrate under the project conditions.

3.3 INSTALLATION
- A. Install overhead doors and track in accordance with approved shop drawings and the manufacturer's printed instructions.
- B. Coordinate installation with adjacent work to ensure proper clearances and allow for maintenance.
- C. Anchor assembly to wall construction and building framing without distortion or stress.
- D. Securely brace door tracks suspended from structure. Secure tracks to structural members only.
- E. Fit and align door assembly including hardware.
- F. Coordinate installation of electrical service. Complete power and control wiring from disconnect to unit components.

3.4 CLEANING AND ADJUSTING
- A. Adjust door assembly to smooth operation and in full contact with weatherstripping.
- B. Clean doors, frames and glass.
- C. Remove temporary labels and visible markings.

3.5 PROTECTION
- A. Do not permit construction traffic through overhead door openings after adjustment and cleaning.
- B. Protect installed products until completion of project.
- C. Touch-up, damaged coatings and finishes and repair minor damage before Substantial Completion.

END OF OVERHEAD DOOR COMPANY SECTION

MODULUS ARCHITECTS & LAND USE PLANNING
8220 SAN PEDRO DR NE SUITE 520
ALBUQUERQUE, NEW MEXICO 87113
PHONE (505) 338-1499
FAX (505) 338-1498

STATE OF COLORADO
Stephen Aaron Dunbar
405806
LICENSED ARCHITECT

PROJECT TITLE

TESLA COLLISION CENTER

6951 S. BLACKHAWK ST, ENGLEWOOD, COLORADO 80112

PROJECT MANAGER

DRAWN BY:

ISSUE / REVISION

ISSUE DATE: 02-12-24

SHEET TITLE

ARCHITECTURAL SPECIFICATIONS

SCALE:

JOB NO. 414063

SHEET NUMBER

A10.05

CONSTRUCTION DOCUMENTS

EQUIPMENT INSTALLATION PLANS FOR:

TESLA MOTORS

6951 S BLACKHAWK ST, ENGLEWOOD, COLORADO 80112

IMPORTANT NOTE: THESE PLANS ARE **ONLY** FOR THE PURPOSE OF OBTAINING REQUIRED PERMITS FOR THE PLACEMENT OF PRE-ENGINEEED, PRE-MANUFACTURED, ETL LISTED EQUIPMENT.

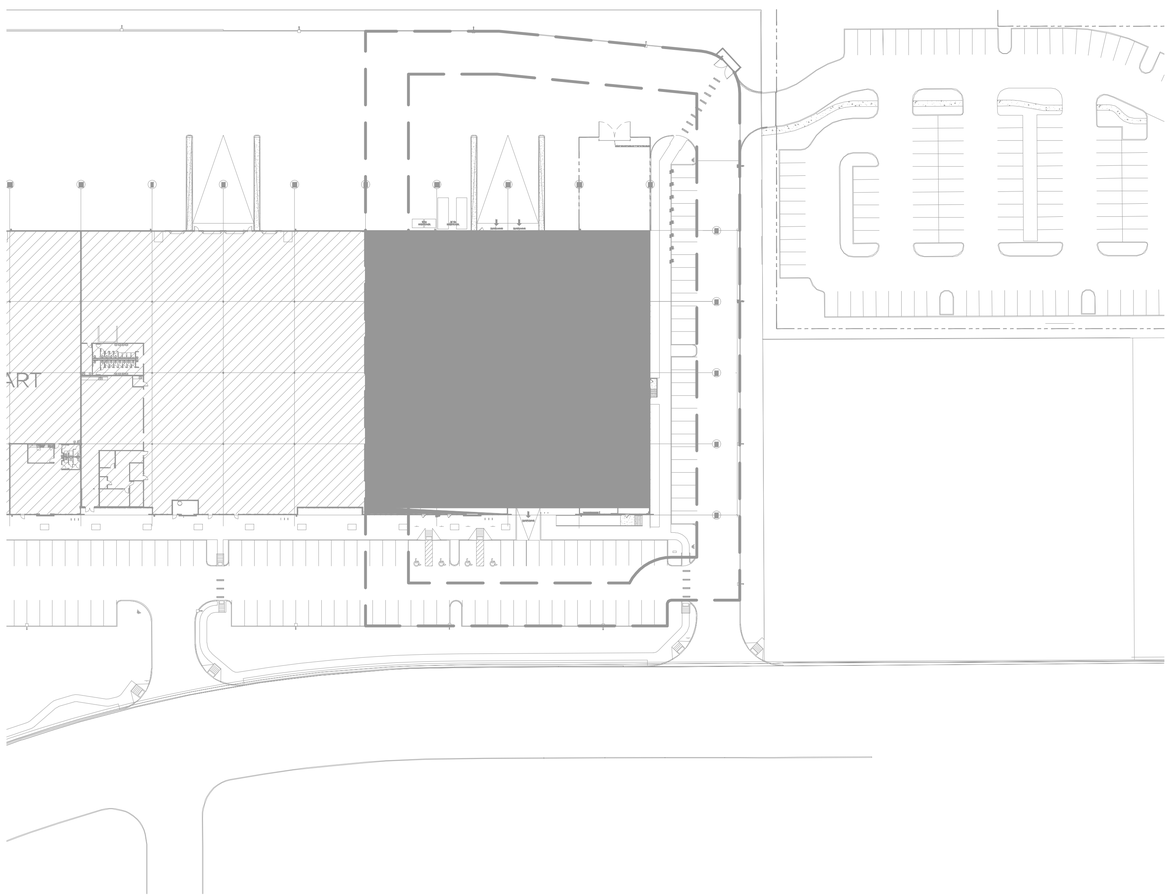

NORTH

SITE PLAN

SCALE: 1" = 50'

SCOPE OF WORK

INSTALL (2) PRE-ENGINEERED, ETL LISTED, AUTOMOTIVE SPRAY BOOTH

INSTALL (2) PRE-ENGINEERED, ETL LISTED, AUTOMOTIVE LIMITED FINISHING WORK STATION

INSTALL (1) PRE-ENGINEERED, ETL LISTED, MIXING ROOM

USI OF NORTH AMERICA

USI-NA TO LOCATE, AND INSTALL ALL (USI-NA PROVIDED) EQUIPMENT INDICATED IN THESE PLANS UNLESS NOTED OTHERWISE (SEE FLOOR PLANS FOR EQUIMPENT TO BE INSTALLED BY USI-NA)

OWNER, CONTRACTOR, SUBCONTRACTORS (NOT USI-NA)

PROPOSED EQUIPMENT IN THESE PLANS WILL HAVE ANCILLARY REQUIREMENTS AS
NOTED BELOW AND WILL BE PROVIDED BY APPROPIATE TRADE LICENSED CONTRACTORS.

FIRE SUPPRESSION: PAINT BOOTH WILL REQUIRE FIRE SUPPRESSION AND WILL BE HANDLED IN A SEPARATE SUBMITTAL BY THE FIRE SUPPRESSION CONTRACTOR.

ELECTRICAL: ELECTRICAL WORK REQUIRED, APPROPIATE ELECTRICAL RUNS TO THE NEW SPRAY BOOTHS WILL BE ADDRESSED IN THE ORIGINAL TENANT IMPROVEMENT. NEW SPRAY BOOTHS HAVE A SINGLE
POINT CONNECTION.

PLUMBING (GAS/AIR): PLUMBING WORK REQUIRED, GAS SUPPLY / LINES TO SPRAY BOOTH HEATERS WILL BE PERMITTED WITH TENANT IMPROVEMENT.

CONCRETE: CONCRETE WORK REQUIRED WILL BE PROVIDED BY APPROPIATE TRADE LICENSED CONTRACTORS AND ARE PERMITTED WITH THE TENANT IMPROVEMENT

ROOF PENETRATION: NEW PAINT BOOTHS WILL REQUIRE ROOF PENETRATIONS FOR EXHAUST AND INTAKE COMPONENTS WHICH WILL BE PROVIDED BY APPROPIATE TRADE LICENSED CONTRACTORS AND ARE PERMITTED WITH THE TENANT IMPROVEMENT

AIR QUALITY: LOCAL AIR QUALITY DISTRICT SHALL BE NOTIFIED AND INFORMATION SUBMITTED TO OBTAIN "AUTHORITY TO CONSTRUCT" AUTHORIZATION. USI-NA CAN ASSIST WITH INFORMATION REQUIRED FOR THE SUBMITTAL, BUT THE OWNER IS RESPONSIBLE FOR THE SUBMITTAL TO AIR QUALITY AND ACQUIRING THE "AUTHORITY TO CONSTRUCT".

FIRE EXTINGUISHERS: PORTABLE FIRE EXTINGUISHERS ARE REQUIRED IN THE VICINITY OF THE PROPOSED PAINT BOOTH, VERIFY WITH THE LOCAL FIRE MARSHAL.

SAFETY SIGNAGE: SIGNAGE AS INDICATED BELOW (OR SIMILAR) WILL BE REQUIRED PER THE REQUIREMENTS OF THE IFC & LOCAL CODES FOR HAZARDOUS MATERIALS IDENTIFICATION. SIGN PLACEMENT SHALL BE IN VICINITY OF ALL SPRAYING AREAS.

NO WELDING

THE USE OF WELDING OR CUTTING EQUIPMENT IN OR NEAR THIS AREA IS DANGEROUS DUE TO FIRE AND EXPLOSION HARZARDS. WELDING AND CUTTING SHALL BE DONE ONLY UNDER THE SUPERVISION OF THE PERSON IN CHARGE

PROPOSED EQUIPMENT

TOTAL SPAY BOOTH SQ. FOOTAGE: 1240 (2 PAINT BOOTH, 2 LIMITED FINISHING WORK STATION, 1 MIXING ROOM)

USI OF NORTH AMERICA (USI-NA) & THESE PLANS

USI-NA HAS BEEN PROVIDING THE VEHICLE COLLISION REPAIR INDUSTRY WITH EQUIPMENT AND VARIOUS ASSOCIATED SERVICES SINCE 1998 AND IS LOCATED IN FRANKLING LAKES, NEW JERSEY.

THESE DRAWINGS HAVE BEEN PREPARED BY USI-NA FOR OUR CUSTOMER AND ARE INTENDED TO PROVIDE ALL THE REQUIRED INFORMATION TO OBTAIN THE REQUIRED PERMIT/S TO INSTALL LISTED AUTOMOTIVE REFINISHING EQUIPMENT ONLY.

PLEASE NOTE THAT THESE PLANS ARE ONLY INTENDED TO INDICATE THE LOCATION AND ANCILLARY REQUIREMENTS OF PROPOSED, PRE-ENGINEERED, LISTED EQUIPMENT AND DO NOT PROPOSE ANY OTHER MODIFICATIONS TO THE BUILDING THAT WOULD REQUIRE THE SERVICE OF A LICENSED ARCHITECT OR ENGINEER.

USI-NA IS THE EQUIPMENT PROVIDER AND FACTORY AUTHORIZED INSTALLER OF EQUIPMENT PROPOSED IN THESE PLANS, ALL OTHER ANCILLARY REQUIREMENTS OF BOOTH (ELECTRICAL, PLUMBING, CONCRETE, ROOF PENETRATIONS) WILL BE PROVIDED BY APPROPRIATE TRADE LICENSED CONTRACTORS.

ALL PROPOSED SPRAY BOOTH EQUIPMENT NOTED IN THESE PLANS IS DESIGNED TO CURRENT CODE REQUIREMENTS AND HAS BEEN APPROVED BY UL, ETL, (OR EQUAL) AND RECEIVED THE APPROPRIATE APPROVAL AND LISTING NUMBERS, THE SUBMITTAL INCLUDES COMPLETE BOOTH INFORMATION PACKETS WITH ALL LISTING REPORTS, FILTER INFORMATION AND MORE IN DEPTH DETAILS OF THE PROPOSED EQUIPMENT THAT MAY NOT BE INDICATED ON THESE PLANS.

PLEASE CONTACT USI-NA @ 201 405 77 560 IF YOU DO NOT HAVE THIS INFORMATION OR HAVE ANY QUESTIONS.

CODES

- 2021 INTERNATIONAL BUILDING CODE
- 2021 INTERNATIONAL PLUMBING CODE
- 2021 INTERNATIONAL MECHANICAL CODE
- 2021 INTERNATIONAL ENERGY CONSERVATION CODE
- 2021 INTERNATIONAL FUEL GAS CODE
- 2021 INTERNATIONAL FIRE CODE
- 2021 INTERNATIONAL EXISTING BUILDING CODE
- 2023 NATIONAL ELECTRIC CODE

SHEET INDEX

A-0	COVER SHEET AND SITE PLAN
M-1.1	GENERAL NOTES
M-1.2	MECHANICAL PLAN - LEVEL 1
M-1.3	MECHANICAL PLAN - ROOF
M-1.4	MECHANICAL PLAN - PIT
M-1.5	EQUIPMENT WEIGHT PLAN
M-2.1	GENERIC PIT DETAILS
M-2.2	MECHANICAL DUCTWORK DETAILS
M-2.3	ANCHORING PLAN - PAINT BOOTH AND MIXING BOOTH
M-2.4	ANCHORING PLAN - LIMITED FINISH WORK STATION
M-2.5	CONCRETE ANCHORING DETAILS & SPECIFICATION
M-3.1	VIEWS AND ISOMETRIC - PAINT BOOTH
M-3.2	VIEWS AND ISOMETRIC - LIMITED FINISH WORK STATION
M-3.3	VIEWS AND ISOMETRIC - MIXING ROOM
M-4.1	GENERIC PAINT BOOTH ASSEMBLY DETAILS
M-4.2	PAINT BOOTH ELECTIRCAL DETAILS
M-4.3	GAS SPECIFICATIONS AND FAN DETAIL
M-4.4	BURNER DETAIL
M-4.5	CONTROL SYSTEM DETAIL
M-4.6	SAFETY DEVICES
M-4.7	FIRE SUPPRESSION DETAIL
M-4.8	FIRE SPRINKLER LOCATIONS
M-5.1	INTERTEK LISTING - PAINT BOOTH
M-5.2	INTERTEK LISTING - LIMITED FINISH WORKSTATION
M-5.3	INTERTEK LISTING - MIXING ROOM

The installation has been designed based on precise customer's requests, and it is his exclusive responsibility to have a local professional engineer check, at his expense, that the installation complies with local codes in force and to get all necessary permits from the competent authorities. Exclusively at the customer's care and expense are: having a local professional engineer make the calculations pertaining to and deriving from the foundation works; the supply and installation of any profiles to fit into the foundations, hook-ups to the existing structure for supporting and/or fixing materials supplied by USI ITALIA, and getting all necessary permits from the competent authorities.

ALL EQUIPMENT IS DESIGNED EXPRESSLY FOR PRE-FINISH PAINT ONLY. REDUCTION OF "VOLATILE ORGANIC COMPOUNDS" REQUIRES EITHER COATING REMOVAL AND/OR RECOVERY OPTIONAL, ADDITIONAL EQUIPMENT.

Intertek

SHOP DIMENSIONS BASED ON BEST AVAILABLE INFORMATION RECEIVED
***CONTRACTORS RESPONSIBILITY:**
-VERIFY EQUIPMENT MODEL NUMBERS IN DRAWING WITH EQUIPMENT ON ORDER.
-FINAL LOCATION OF EQUIPMENT.
-FIELD VERIFY ALL DIMENSIONS.
-VERIFY COMPLIANCE WITH ALL NATIONAL AND LOCAL CODES WITHIN JURISDICTION OF INSTALLATION SITE.
SPECIFICATIONS FOR PERMIT APPLICATION

Copyright © 2023 USI ITALIA
This drawing is not to be reproduced, either in whole or in part, without the permissions of USI ITALIA

PHONE +1 201-405-7760
565 Commerce St, Franklin Lakes, NJ 07417, United States

BY	CHECKED
DMD	DRK

ISSUE	DATE
R0	2023.12.05

PROJECT NAME

TESLA ENGLEWOOD

ENGINEER

RENO JAMES ENGINEERING
303.800.5105
3760 VANCE ST STE 301
WHEAT RIDGE, CO 80033

STAMP

COLORADO LICENSED
RENO JAMES
2023.12.18
40380
PROFESSIONAL ENGINEER

SHEET DESCRIPTION

COVER SHEET AND SITE PLAN

SHEET NUMBER

A-0

GENERAL BOOTH INFORMATION

THE PROPOSED SPRAY BOOTH (OR BOOTHS) IS SPECIALIZED. PRE-ENGINEERED, LISTED, PIECE OF EQUIPMENT DESIGNED FOR THE SOLE PURPOSE OF PROVIDING A SAFE, CLEAN ENVIRONMENT FOR PAINT TECHNICIANS TO REFINISH AUTOMOBILES, LIGHT TRUCKS, SUV'S AND THEIR RELATED PARTS.

IT IS CONSTRUCTED AND INSTALLED IN ACCORDANCE WITH ALL CURRENT APLICABLE CODES INSIDE AN EXISTING STRUCTURE AND IS NOT USED FOR ANY TYPE OF LOAD BEARING ACTIVITY. IT IS NOT USED FOR STORAGE, MANUFACTURE, OR CONSTRUCCION OF ANY MATERIALS OR PRODUCTS.

THE BOOTH IS DESIGNED TO DRAW 16500 CFM OF AIR FROM THE EXTERIOR OF THE BUILDING. THE INTAKE AIR IS FILTERED THROUGHT A SET OF 6-POCKET FILTERS BEFORE BEING HEATED TO THE DESIRED SPRAY OR BAKE TEMPERATURE. THE HEATED AIR THEN ENTERS THE ROOF PLENUM OF THE BOOTH AND IS FILTERED THROUGH HIGH DENSITY FILTERS IN THE BOOTH CEILING AND THEN FORCED AROUND THE VEHICLE AT THE REQUIRED 100 LINEAL FEET PER MINUTE MINIMUM (THIS CREATES WHAT IS KNOWN AS AN ENVELOPE OF AIR). THE AIR IS NOW FORCED THROUGH THE FLOOR FILTERS WHICH ENTRAP 99% OF SPRAY PARTICULATE BEFORE TRAVELING INTO THE EXHAUST PLENUM AND THROUGH ANOTHER SET OF 6-POCKET FILTERS (TO PROTECT EXHAUST FAN) BEFORE BEING EXHAUSTED TO THE EXTERIOR OF THE BUILDING.

THE BOOTH HAS A NUMBER OF SAFETY FEATURES THAT INCLUDES NOTIFICATION OF ANY RESTRICTED FILTERS AND INTERLOCKED VALVES THAT ONLY ALLOWS SPRAY AIR WHEN THE BOOTH EXHAUST SYSTEM IS FUNCTIONING (ON)

PAINT BOOTH AND ALL COMPONENTS CONFORMS TO THE REQUIREMENTS OF:

*NFPA-33 STANDARD FOR SPRAY APPLICATIONUSING FLAMMABLE AND COMBUSTIBLE MATERIALS
*NFPA-86 STANDARD FOR OVENS AND FURNACES
*NFPA-91 STANDARD FOR EXHAUST SYSTEMS FOR A CONVEYING OF MATERIALS
*NFPA-101 LIFE SAFETY CODE
*NFPA-70 NATIONAL ELECTRIC CODE
*OSHA SAFETY AND HEALTH STANDARDS

ALL LIGHT FIXTURES ARE ETL APPROVED FOR HAZARDOUS LOCATIONS.
ALL LIGHT FIXTURES ARE ACCESSIBLE FROM THE INTERIOR OF THE SPRAY BOOTH AND CONFORM TO THE PROVISIONS OF NFPA 33, AND REFERENCED NFPA STANDARDS.

ELECTRICAL COMPONENTS, SUCH AS MOTORS, MOTOR STARTERS, DISCONNECT SWITCHES AND PUSH BUTTONS, ARE LISTED OR APPROVED FOR THE CLASS AND DIVISION IN WHICH THEY ARE LOCATED.

GLASS USED IN THE SPRAY BOOTH IS TEMPERED AND MEETS OR EXCEEDS ANSI Z-97.1 STANDARD.

CONFORMANCE TO ALL THESE REQUIREMENTS IS DEPENDENT UPON THE MANNER IN WHICH THE EQUIPMENT IS INSTALLED. THE CONTRACTOR WILL MAKE CERTAIN THAT ALL OF THE ELECTRICAL WIRING AND CONDUIT, PIPING, GAS SUPPLY, ROOF PENETRATIONS, AUTOMATIC FIRE PROTECTION SYSTEMS, AND THE LOCATION OF THE EQUIPMENT WITHIN THE BUILDING ALSO CONFORMS TO THE CITED CODES AND OTHER REFERENCES.

SPRAY BOOTH NOTES:

1. THE SPRAY BOOTH SHALL COMPLY WITH THE IBC, NEC ,IMC, IFC, THE LAST EDITION OF NFPA 33, AND AHJ REQUIREMENTS. SPRAY BOOTHS SHALL BE PROTECTED BY AN APPROVED AUTOMATIC FIRE-EXTINGUISHING SYSTEM (SEPARATE SUBMITTAL) COMPLYING WITH CHAPTER 9 OF THE 2018 IFC. PROTECTION SHALL ALSO EXTEND TO EXHAUST PLENUMS, EXHAUST DUCTS AND BOTH SIDES OF DRY FILTERS WHEN SUCH FILTERS ARE USED. PORTABLE FIRE EXTINGUISHERS COMPLYING WITH 2018 IFC AND SHALL BE PROVIDED FOR SPRAYING AREAS IN ACCORDANCE WITH THE REQUIREMENTS FOR AN EXTRA (HIGH) HAZARD OCCUPANCY
2. OWNERS SHALL SUBMIT A PLAN TO AIR QUALITY MANAGMENT DISTRICT FOR APPROVAL PRIOR TO THE INSTALLATION AND OPERATION OF THE SPRAY BOOTH.
3. SPRAY BOOTHS SHALL BE CONSTRUCTED OF APPROVED NONCOMBUSTIBLE MATERIALS. ALUMINIUN SHALL NOT BE USED. BOOTHS CONSTRUCTED WITH SHEET METAL, SINGLE-SKIN ASSEMBLIES SHAL BE NOT THINNER THAN 18ga. AND DOUBLE-SKIN ASSEMBLIES SHALL NOT BE THINNER THAN 20ga. STRUCTURAL SECTIONS OF SPRAY BOOTHS ARE ALLOWED TO BE SEALED WITH LATEX.BASED OR SIMILAR SEALANTS.
4. EXIT DOORS FROM PRE-MANUFACTURED SPRAY BOOTHS SHALL NOT BE LESS THAN 32" WIDE BY 6'-8" TALL.
5. SPRAY BOOTHS SHALL BE INSTALLED SO THAT ALL PARTS OF THE BOOTH ARE READILY ACCESSIBLE FOR CLEANING. A CLEAR SPACE OF NOT LESS THAN 3' SHALL BE MAINTAINED ON ALL SIDES OF THE SPRAY BOOTH. THIS SPACE SHALL BE KEPT FREE OF ANY STORAGE OR COMBUSTIBLE CONSTRUCTION. THIS REQUIREMENT SHALL NOT PROHIBIT LOCATING IT CLOSER THAN 3' TO AN EXTERIOR WALL CONSTRUCTED OF NONCOMUSTIBLE MATERIAL AND / OR AN INTERIOR WALL WITH A FIRE-RESISTANCE RATING OF NOT LESS THAN 1 HOUR - PROVIDED THE SPRAY BOOTH CAN BE ADEQUTELY MAINTAINED CLEANED.
6. SPRAY BOOTHS SHALL BE ILLUMINATED THROUGH GLASS PANELS OR OTHER TRANSPARENT MATERIALS WITH ONLY FIXED LUMINARIES. GLASS PANELS SHALL BE OF HEAT-TREATED GLASS, WIRED GLASS OR HAMMERED WIRE GLASS AND SEALED. PANELS SHALL BE SEPARATED FROM LUMINARIES TO PREVENT THE SURFACE TEMPERATURE OF THE PANEL FROM EXCEEDING 200ºF. LIGHT LENSES ARE INTERLOCKED TO BOOTH CONTROLS TO PREVENT BOOTH OPERATIONS OF LENSES ARE OPEN (UNSEALED).
7. PORTABLE ELECTRIC LAMPS SHALL NOT BE USED IN SPRAYING AREAS DURING SPRAYING OPERATIONS.
8. MECHANICAL VENTILATION SHALL BE PROVIDED IN ACCORDANCE WITH SECTION IMC. VENTILATION SHALL BE KEPT IN OPERATION AT ALL TIME WHILE SPRAYING OPERATIONS ARE BEING CONDUCTED FOR A SUFFICIENT TIME THEREAFTER TO ALLOW VAPORS FROM DYING COATED ARTICLES FINISHING MATERIAL RESIDUE TO BE EXHAUSTED. SPRAYING EQUIPMENT SHALL BE INTERLOCKED WITH THE VENTILATION OF THE SPRAYING AREA SUCH THAT SPRAYING OPERATIONS CANNOT BE CONDUCTED UNLESS THE VENTILATION SYSTEM IS IN OPERATION.
9. VENTILATION SYSTEMS SHALL BE DESIGNED, INSTALLED AND MAINTAINED SUCH THAT THE AVERAGE OR VELOCITY OVERTHE OPEN FACE OF THE BOOTH, OR BOOTH CROSS SECTION IN THE DIRECTION OF AIRFLOW DURING SPRAYING OPERATIONS, SHALL NOT BE LESS THAN 100 FEET PER MINUTE (0.51 m/s)
10. EACH SPRAY BOOTH SHALL HAVE AN INDEENDENT EXHAUST DUCT SYSTEM DISCHARGING TO THE OUTSIDE. IF MORE THAN ONE SERVES ONE BOOTH, FANS SHALL BE INTERCONNECTED SUCH THAT ALL FANS WILL OPERATE SIMULTANEOUSLY.
11. THE TERMINATION POINT FOR EXHAUST DUCTS DISCHARGING TO THE ATMOSPHERE SHALL NOT BE LESS THAN 30' FROM PROPERTY LINES; 10' FROM OPENINGS INTO THE BUILDING; 6' FROM EXTERIOR WALLS AND ROOFS; 30' FROM COMBUSTIBLE WALLS OR OPENINGS INTO THE BUILDING THAT ARE IN THE DIRECTION OF THE EXHAUST DISCHARGE; 10' ABOVE ADJOINING GRADE.
12. ELECTRIC MOTORS DRIVING EXHAUST FANS SHALL NOT BE PLACED INSIDE BOOTHS OR DUCTS. FAN ROTATING ELEMENTS SHALL BE NON-FERROUS OR NON-SPARKING OR THE CASING SHALL CONSIST OF, OR BE LINED WITH, SUCH MATERIAL. BELTS SHALL BOT ENTER THE DUCT OR BOOTH UNLESS THE BELT PULLED WITH THE DUCT ARE TIGHTLY ENCLOSED.
13. SPRAY BOOTH WILL BE EQUIPPED WITH COMPRESSED AIR INTERLOCKS THAT WILL PREVENT THE SPRAYING OF ANY COATINGS IN THE BOOTH WHEN THE SPRAY BOOTH EXHAUST SYSTEM IS NOT FUNCTIONING (OFF). INTERLOCKS ALFO SHUT OFF SPRAY AIR WHEN ANY BOOTH DOORS ARE OPEN WHILE BOOTH EXHAUST SYSTEM IS FUNCTIONING (ON).
14. ANY ELECRTICAL SWITCHES, OUTLETS, SUB PANELS, DISCONNECTS, ETC. SHALL BE LOCATED A MINIMUM 36" (VERT. HORIZ.) FROM ANY BOOTH OPENINGS UNLESS RATED FOR CLASS 1, DIV 2 LOCATIONS.
15. DISCARDED FILTER PADS SHALL BE IMMEDIATELY REMOVED TO A SAFE, DETACHED LOCATION OR PLACED IN A NON-COMBUSTIBLE CONTAINER WITH A TIGHT-FITTING LID DISPOSED OF PROPERLY.
16. ALL SPARKING OPERATIONS ARE TO BE PERFORMED INSIDE THE APPROVED SPRAY BOOTHS, SPRAYING OPERATIONS WILL BE PERFORMED USING APPROVED HVLP (HIGH VOLUME LOW PRESSURE) SPRAYING EQUIPMENT.
17. ALL HAZARDOUS MATERIALS STORED OUTSIDE THE SPRAY BOOTH AND/OR MIX ROOM WILL BE CONTAINED IN SEPERATE APPROVED FIRE RATED CABINETS. LIQUID QUANTITIES OF REFINISH MATERIALS WILL BE LIMITED TO 120 GALLONS WHEN STORED IN THE SPRAY BOOTH AND/OR MIX ROOM.
18. REQUIRED SIGNAGE SHALL BE INSTALLED PER IFC SECTION 27035, 2703.6, 2703.7, 2703.7.1, HAZARD I.D SIGNS, NO SMOKING SIGNS, ETC. (SEE SHT "EQ 1" FOR SIGNS REQUIRED).
19. PROVIDED A MINIMUM CLASS 4A:40B:C PORTABLE FIRE EXTINGUISHER WITHIN 30' PF THE BOOTH OR A MINIMUM 4A:80B:C WITHIN 50' OF THE BOOTH.
20. PROVIDED PROTECTION OF FIRE SPRINKLER HEADS IN THE SPRAY BOOTH WITH 0.003"THICK POLYETHYLENE, CELLPHANE OR THIN PAPER BAGS PER 2018 IFC.

ELECTRICAL SPECIFICATIONS

GENERAL NOTES:

1. ELECTRICAL INSTALLATION SHALL COMPLY WITH THE LAST EDITION OF ALL APPLICABLE LOCAL CODES.

2. ELECTRICAL CONTRACTOR SHALL PROCURE AND PAY FOR ALL PERMITS, LICENSES, ETC. REQUIRED TO CARRY ON AND COMPLETE THE WORK. PERMIT BY OWNER.

3. PROVIDE ALL LABOR, MATERIALS, TOOLS, PLANT EQUIPMENT, TRANSPORTATION AND PERFORM ALL OPERATIONS NECESSARY FOR ANY REASONABLE INCIDENTAL TO PROPER EXECUTION AND COMPLETION OF ALL "ELECTRICAL WORK" WHETHER SPECIFICALLY MENTIONED OR NOT; ALL AS INDICATED, SPECIFIED HEREIN, AND/OR IMPLIED THEREBY TO CARRY OUT THE APPARENT INTENT THEREOF.

4. ALL ELECTRICAL MATERIALS SHALL BE NEW AND LISTED WITH THE UNDERWRITERS' LABORATORIES, INC., SHALL MEET THEIR REQUIREMENTS AND SHALL BEAR THEIR LABEL WHEREVER STANDARDS HAVE BEEN ESTABLISHED AND LABEL SERVICE IS REGULARLY FURNISHED BY THAT AGENCY.

5. ELECTRICAL DRAWINGS ARE ESSENTIALLY DIAGRAMMATIC AND ALTHOUGH THE SIZE AND LOCATIONS OF EQUIPMENT ARE SHOWN TO SCALE WHEREVER POSSIBLE, CONTRACTOR SHALL MAKE USE OF ALL DATA IN ALL CONTRACT DOCUMENTS AND VERIFY THIS INFORMATION AT THE SITE. CONTRACTOR SHALL BE RESPONSIBLE FOR LAYING OUT AND INSTALLING HIS WORK TO AVOID INTERFERENCE WITH OTHER TRADES.

6. CONDUCTORS SHALL BE COPPER CONDUCTORS TYPE THWN UNLESS OTHERWISE NOTED OR REQUIRED BY CODE.

WIRING METHODS:

1. ALL WIRING SHALL BE INSTALLED IN STEEL CONDUITS, CONCEALED IN WALL AND CEILING U.O.N.

2. MINIMUM CONDUIT SIZE SHALL BE 1/2". MINIMUM ACCEPTABLE CONDUITS ARE
A. GALVANIZED RIGID STEEL.
B. GALVANIZED STEEL EMT.
C. LIQUID TIGHT STEEL FLEX - FOR FINAL CONNECTION TO OUTDOOR EQUIPMENT.
D. FLEXIBLE STEEL CONDUIT - FOR INDOOR FINAL CONNECTIONS TO MECHANICAL EQUIPMENT (NOT TO EXCEED 36").

E. PVC CONDUIT SCHEDULE 40, UNDERGROUND.
3. NMC CABLING SYSTEMS ARE NOT ALLOWED IN THIS BUILDING.
4. MC CABLING SYSTEMS ARE NOT ALLOWED IN THIS BUILDING.

SUPPORTS:

1. FURNISH ALL NECESSARY FOUNDATIONS, SUPPORTS, BACKING, ETC., FOR ALL ELECTRICAL ENCLOSURES, CONDUITS AND EQUIPMENT.

2. ATTACH ALL BOXES, CABINETS, ETC. TO WOOD WITH WOOD OR LAG SCREWS, TO METAL WITH MACHINE SCREWS OR BOLTS AND TO CONCRETE WITH EXPANSION ANCHORS AND MACHINE SCREWS OR BOLTS.

GROUNDING:

1. GROUND AND BOND ALL EQUIPMENT AS REQUIRED BY GOVERNING CODES AND SPECIFICALLY INCLUDING SWITCHBOARD, PANELBOARDS, MOTOR CASES, ETC.

WORKING CLEARANCES FOR PANELS & SWITCHBOARDS

1. COORDINATE WITH OTHER TRADES TO ENSURE CODE REQUIRED WORKING CLEARANCES, ACCESS, ETC. FOR PANELS AND SWITCHBOARDS.

The installation has been designed based on precise customer's requests, and it is his exclusive responsibility to have a local professional engineer check, at his expense, that the installation complies with local codes in force and to get all necessary permits from the competent authorities. Exclusively at the customer's care and expense are: having a local professional engineer make the calculations pertaining to and deriving from the foundation works; the supply and installation of any profiles to fit into the foundations, hook-ups to the existing structure for supporting and/or fixing materials supplied by USI ITALIA, and getting all necessary permits from the competent authorities.

ALL EQUIPMENT IS DESIGNED EXPRESSLY FOR THE REMOVAL OF PARTICULATE MATTER ONLY. REDUCTION OF "VOLATILE ORGANIC COMPOUNDS" REQUIRES EITHER COATING REFORMULATION OR OPTIONAL, ADDITIONAL EQUIPMENT.

Intertek

SHOP DIMENSIONS BASED ON BEST AVAILABLE INFORMATION RECEIVED
***DISTRIBUTORS RESPONSABILITY:**
-VERIFY EQUIPMENT MODEL NUMBERS IN DRAWING WITH EQUIPAMENT ON ORDER.
-FINAL LOCATION OF EQUIPAMENT.
-FIELD VERIFY ALL DIMENSIONS.
-VERIFY COMPLIANCE WITH ALL NATIONAL AND LOCAL CODES WITHIN JURISDICTION OF INSTALLATION SITE.
SPECIFICATIONS FOR PERMIT APPLICATION

Copyright © 2023 USI ITALIA
This drawing is not to be reproduces, either in whole or in part without the permissions of Usi Iberia.

USI north america
PHONE +1 201-405-7760
565 Commerce St, Franklin Lakes, NJ 07417, United States

BY	CHECKED
DMD	DRK
ISSUE	**DATE**
R0	2023.12.05

PROJECT NAME
TESLA ENGLEWOOD

ENGINEER
RENO JAMES ENGINEERING
303.800.5105
3760 VANCE ST STE 301
WHEAT RIDGE, CO 80033

STAMP
COLORADO LICENSED PROFESSIONAL ENGINEER
40380
2023.12.08

SHEET DESCRIPTION
GENERAL NOTES

SHEET NUMBER
M-1.1

LEGENDS

	INPUT RATING:	NATURAL GAS:
*	- Max. 1.500.000 BTU	23.60 CFM
	- Min. 50.000 BTU	0.79 CFM

KEY DUCTS		
1	Air intake duct	2' 11½" x 2' 11½" (90 x 90 Cm)
2	Air exhaust duct	2' 11½" x 2' 11½" (90 x 90 Cm)
3	Mixing room air exhaust duct	Ø7"

KEY		
C01	Spray-booth:	CHRONOTECH 90.45.28
C02	Spray-booth:	CHRONOTECH 90.45.28
Z01	Preparation area:	70.40+40.28
B01	Mixing room:	45.30.28

		Voltage	Power installed	Electric input
I	POWER CABINET Spray-booth	- 460V/60Hz 3Ph+G (TN or TT System)	22.0 kW	38.6 A
		- 120V/60Hz 1Ph+N+G (TN or TT System)°	2.0 kW	17.3 A
II	CONTROL PANEL Preparation Area	- 460V/60Hz 3Ph+G (TN or TT System)	22.0 kW	38.6 A
		- 120V/60Hz 1Ph+N+G (TN or TT System)	2.0 kW	17.3 A
III	CONTROL PANEL Mixing room	- 120V/60Hz 1Ph+N+G (TN or TT System)	0.6 kW	5.5 A

NOTE: VERIFY ALL POWER REQUIREMENTS WITH SUPPLIER OF EQUIPMENT.

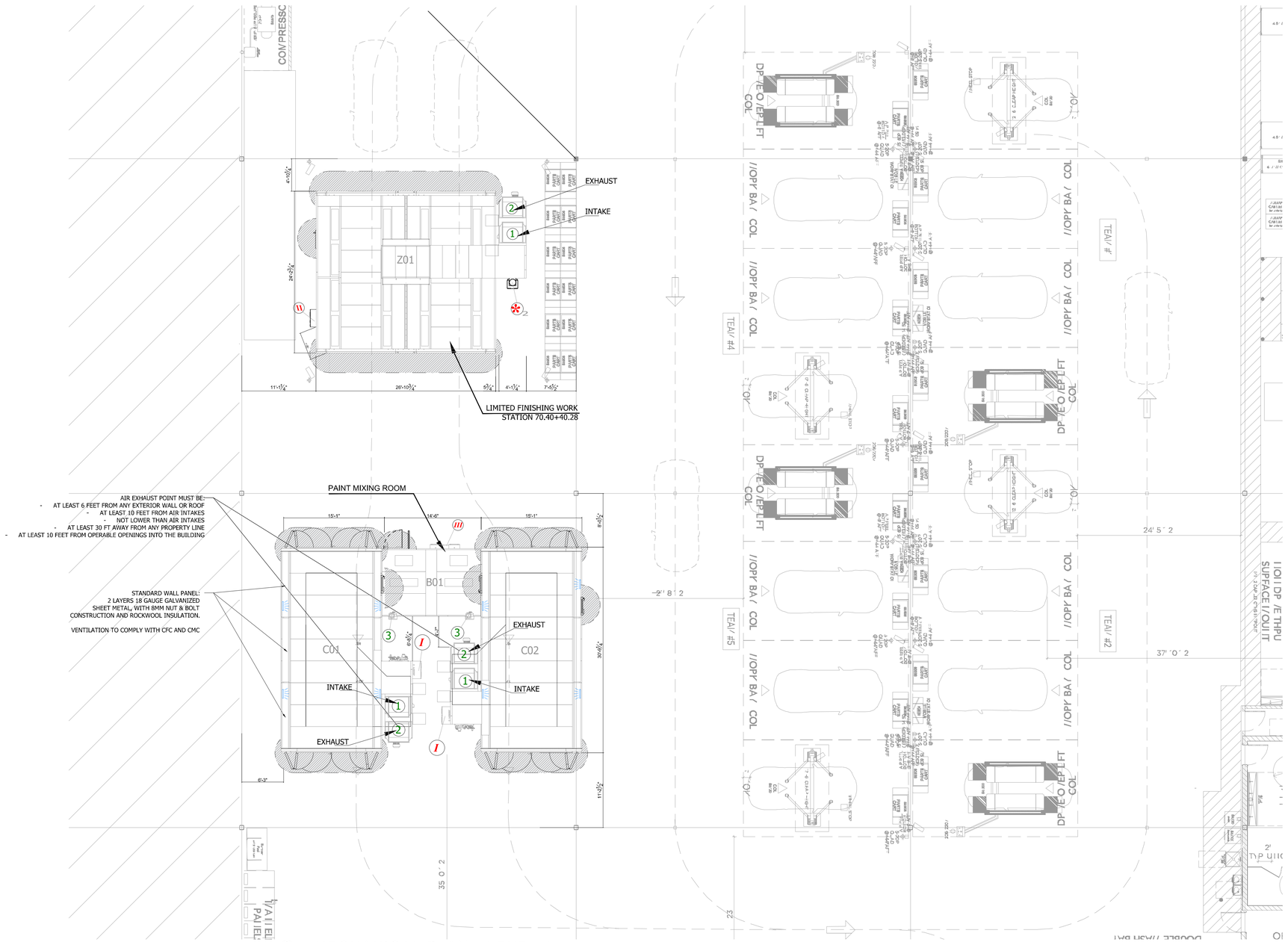

MECHANICAL PLAN - LEVEL 1

SCALE: 1/8" = 1'-0"

USI BOOTH SCHEDULE

DEVICE	TAG	MODEL	SIZE	BURNER MODEL	GAS: MBH	GAS: MIN PRESSURE (IN W.C.)	GAS: MAX PRESSURE (IN W.C.)	FAN: CFM	FAN: STATIC PRESSURE (IN W.C.)	ETL LIST: ATM FOR REPORT	ELECTRICAL: VOLTS	PH	HZ	F.L.A.
PAINT BOOTH	C01, C02	CHRONOTECH	90.45.28	RAC150TU+DF-450KWT-ES	1500	6	14	20,500	1.32	102674236CRT-002	460	3	60	38.6
LIMITED FINISHING WORKSTATION	Z01	LFW-SD220	70.40+40.28	RAC150TU+DF-450KWT-ES	1500	6	14	20,500	1.32	3062670-003	460	3	60	38.6
MIXING BOOTH	B01	BV43	45.30.28	N/A	N/A	6	14	500	0.5	3062670-001	120	1	60	4.2

NOTE: VERIFY ALL POWER REQUIREMENTS WITH SUPPLIER OF EQUIPMENT.

The installation has been designed based on precise customer's requests, and it is his exclusive responsibility to have a local professional engineer check, at his expense, that the installation complies with local codes in force and to get all necessary permits from the competent authorities. Exclusively at the customer's care and expense are: having a local professional engineer make the calculations pertaining to and deriving from the foundation works; the supply and installation of any profiles to fit into the foundations, hook-ups to the existing structure for supporting and/or fixing materials supplied by USI ITALIA, and getting all necessary permits from the competent authorities.

ALL EQUIPMENT IS DESIGNED EXPRESSLY FOR PAINT PARTICULATE MATTER ONLY. REDUCTION OF "VOLATILE ORGANIC COMPOUNDS" REQUIRES EITHER COATING REMOVAL AND/OR OPTIONAL, ADDITIONAL EQUIPMENT.

Intertek

SHOP DIMENSIONS BASED ON BEST AVAILABLE INFORMATION RECEIVED
***DESCRIPTIONS SUBJECT TO AVAILABILITY:**
-VERIFY EQUIPMENT MODEL NUMBERS IN DRAWING WITH EQUIPMENT ON ORDER.
-FINAL LOCATION OF EQUIPMENT.
-REFER TO ALL DRAWINGS.
-VERIFY COMPLIANCE WITH ALL NATIONAL AND LOCAL CODES WITHIN JURISDICTION OF INSTALLATION SITE.
SPECIFICATIONS FOR PERMIT APPLICATION

Copyright © 2023 USI ITALIA
This drawing is not to be reproduced, either in whole or in part, without the permissions of USI ITALIA.

PHONE +1 201-405-7760
565 Commerce St, Franklin Lakes, NJ 07417, United States

BY	CHECKED
DMD	DRK

ISSUE	DATE
R0	2023.12.05

PROJECT NAME
TESLA ENGLEWOOD

ENGINEER
RENO JAMES ENGINEERING
303.800.5105
3760 VANCE ST STE 301
WHEAT RIDGE, CO 80033

STAMP
COLORADO LICENSED RENO JAMES 2023.12.05 40380 PROFESSIONAL ENGINEER

SHEET DESCRIPTION
MECHANICAL PLAN - LEVEL 1

SHEET NUMBER
M-1.2

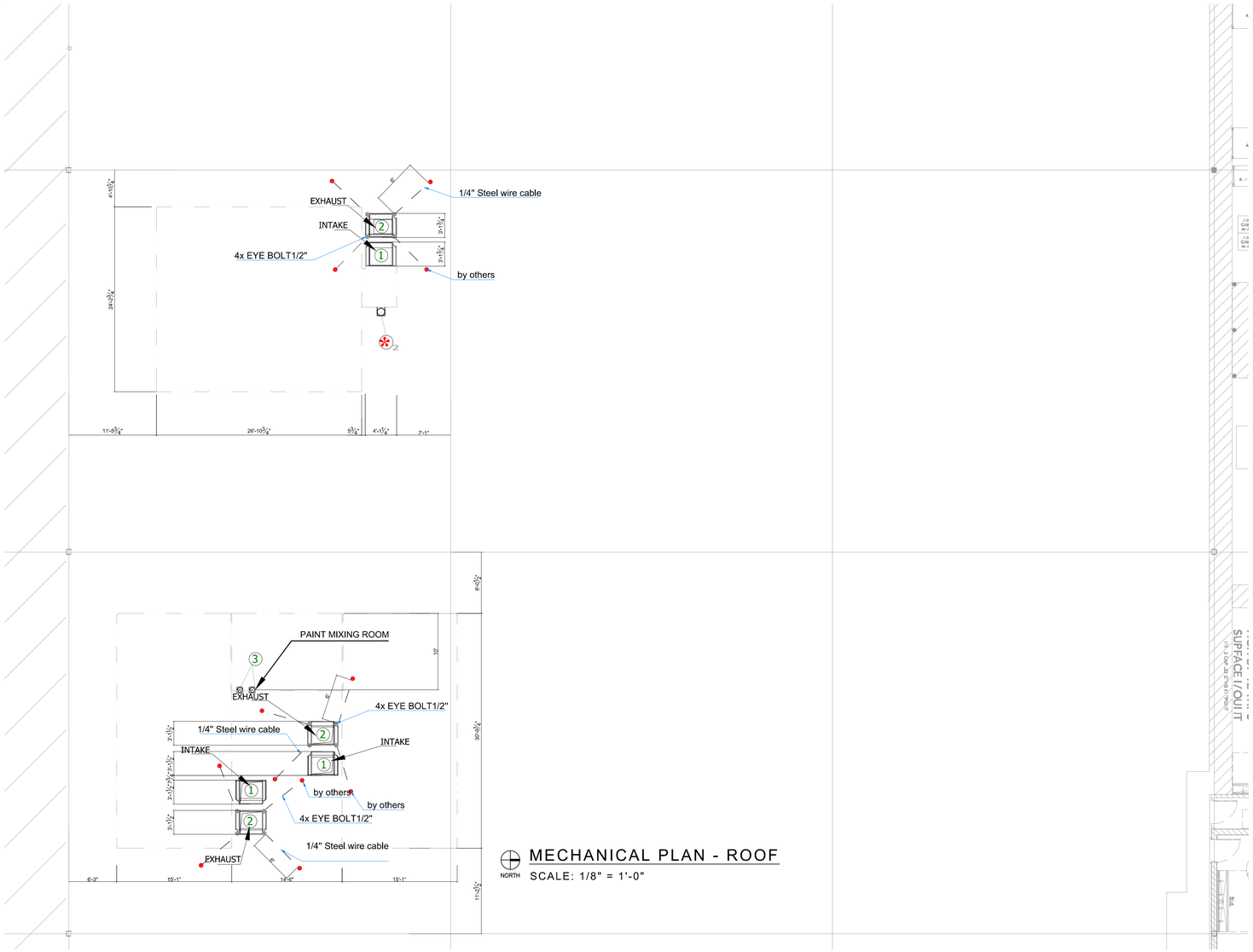

MECHANICAL PLAN - ROOF

NORTH

SCALE: 1/8" = 1'-0"

DUCTING BRACING/SUPPORTS:
10"DUCT - 22 GA. X 1" GALV.STRAP @ MAX 12' O.C
34"DUCT - 22 GA. X 1" GALV.STRAP @ MAX 12' O.C

NOTE:
1. FIELD VERIFY ALL DIMENSIONS.
2. PROVIDE FIRE SUPPRESSION IN ALL EXHAUST DUCTS PER CODE.

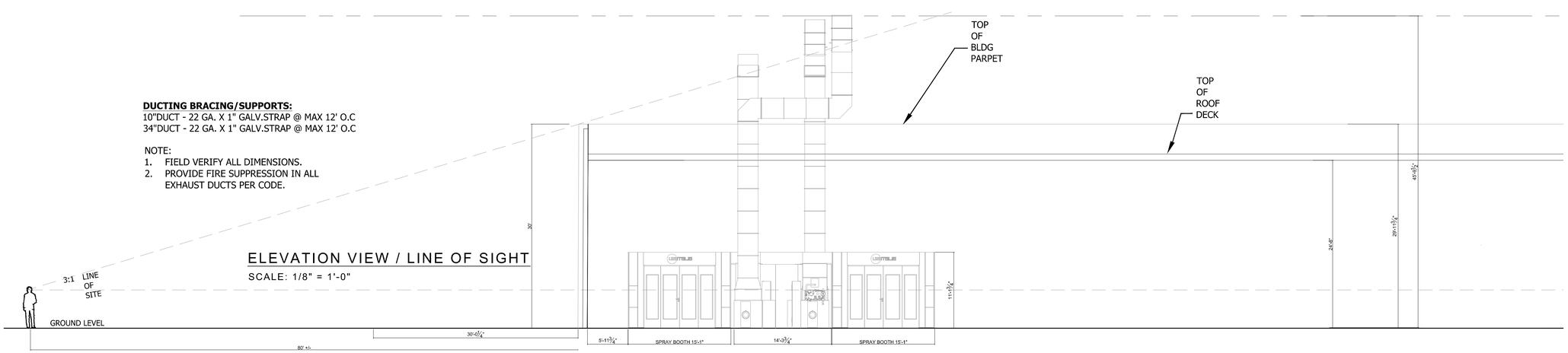

ELEVATION VIEW / LINE OF SIGHT

SCALE: 1/8" = 1'-0"

The installation has been designed based on precise customer's requests, and it is his exclusive responsibility to have a local professional engineer check, at his expense, that the installation complies with local codes in force and to get all necessary permits from the competent authorities. Exclusively at the customer's care and expense are: having a local professional engineer make the calculations pertaining to and deriving from the foundation works; the supply and installation of any profiles to fit into the foundations, hook-ups to the existing structure for supporting and/or fixing materials supplied by USI ITALIA, and getting all necessary permits from the competent authorities.

ALL EQUIPMENT IS DESIGNED EXPRESSLY FOR THE REMOVAL OF PARTICULATE MATTER ONLY. REDUCTION OF "VOLATILE ORGANIC COMPOUNDS" REQUIRES EITHER COATING REFORMULATION OR OPTIONAL, ADDITIONAL EQUIPMENT.

Intertek

SHOP DIMENSIONS BASED ON BEST AVAILABLE INFORMATION RECEIVED
***DISTRIBUTORS RESPONSABILITY:**
-VERIFY EQUIPMENT MODEL NUMBERS IN DRAWING WITH EQUIPAMENT ON ORDER.
-FINAL LOCATION OF EQUIPAMENT.
-FIELD VERIFY ALL DIMENSIONS.
-VERIFY COMPLIANCE WITH ALL NATIONAL AND LOCAL CODES WITHIN JURISDICTION OF INSTALLATION SITE.
SPECIFICATIONS FOR PERMIT APPLICATION

Copyright © 2023 USI ITALIA
This drawing is not to be reproduced, either in whole or in part without the permissions of Usi Italia.

PHONE +1 201-405-7760
565 Commerce St, Franklin Lakes, NJ 07417, United States

BY	CHECKED
DMD	DRK

ISSUE	DATE
R0	2023.12.05

PROJECT NAME
TESLA ENGLEWOOD

ENGINEER
RENO JAMES ENGINEERING
303.800.5105
3760 VANCE ST STE 301
WHEAT RIDGE, CO 80033

STAMP
COLORADO LICENSED PROFESSIONAL ENGINEER
DANIEL RENO BELLING
2023.12.08
40380

SHEET DESCRIPTION
MECHANICAL PLAN - ROOF

SHEET NUMBER
M-1.3

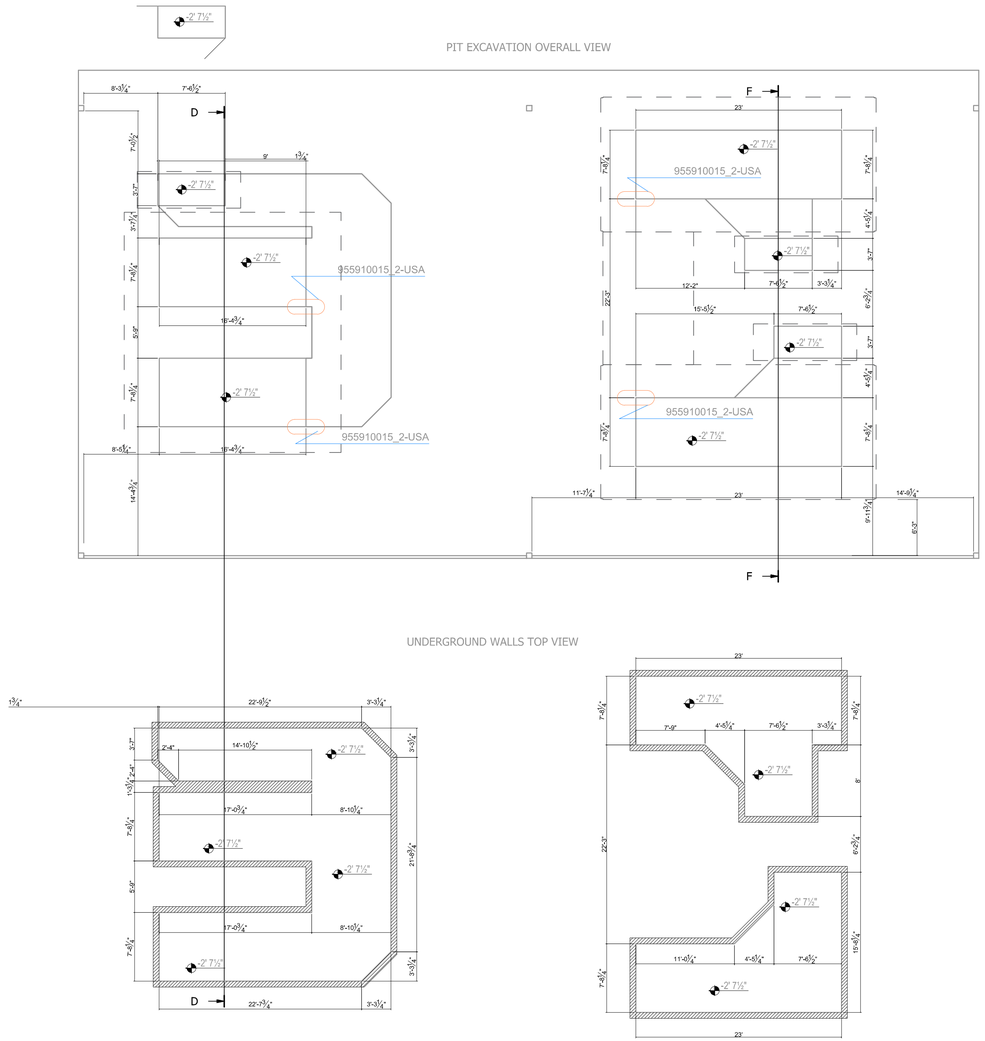

PAINT BOOTH PIT DIMENSIONS

SCALE: 1/8" = 1'-0"

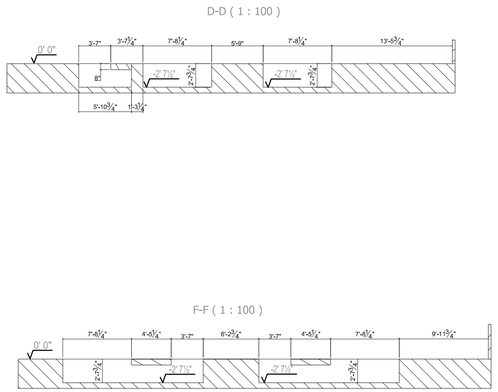

ELEVATION VIEW - PIT

SCALE: 1/8" = 1'-0"

The installation has been designed based on precise customer's requests, and it is his exclusive responsibility to have a local professional engineer check, at his expense, that the installation complies with local codes in force and to get all necessary permits from the competent authorities. Exclusively at the customer's care and expense are: having a local professional engineer make the calculations pertaining to and deriving from the foundation works; the supply and installation of any profiles to fit into the foundations, hook-ups to the existing structure for supporting and/or fixing materials supplied by USI ITALIA, and getting all necessary permits from the competent authorities.

ALL EQUIPMENT IS DESIGNED EXPRESSLY FOR THE REMOVAL OF PARTICULATE MATTER ONLY. REDUCTION OF "VOLATILE ORGANIC COMPOUNDS" REQUIRES EITHER COATING REFORMULATION OR OPTIONAL, ADDITIONAL EQUIPMENT.

Intertek

SHOP DIMENSIONS BASED ON BEST AVAILABLE INFORMATION RECEIVED
***DISTRIBUTORS RESPONSABILITY:**
-VERIFY EQUIPMENT MODEL NUMBERS IN DRAWING WITH EQUIPMENT ON ORDER.
-FINAL LOCATION OF EQUIPMENT.
-FIELD VERIFY ALL DIMENSIONS.
-VERIFY COMPLIANCE WITH ALL NATIONAL AND LOCAL CODES WITHIN JURISDICTION OF INSTALLATION SITE.
SPECIFICATIONS FOR PERMIT APPLICATION

Copyright © 2023 USI ITALIA
This drawing is not to be reproduced, either in whole or in part without the permissions of Usi Italia.

PHONE +1 201-405-7760
565 Commerce St, Franklin Lakes, NJ 07417, United States

BY	CHECKED
DMD	DRK

ISSUE	DATE
R0	2023.12.05

PROJECT NAME
TESLA ENGLEWOOD

ENGINEER
RENO JAMES ENGINEERING
303.800.5105
3760 VANCE ST STE 301
WHEAT RIDGE, CO 80033

STAMP
COLORADO LICENSED PROFESSIONAL ENGINEER
DANIEL RENO BEDINGER
2023.12.05
40380

SHEET DESCRIPTION
MECHANICAL PLAN - PIT

SHEET NUMBER
M-1.4

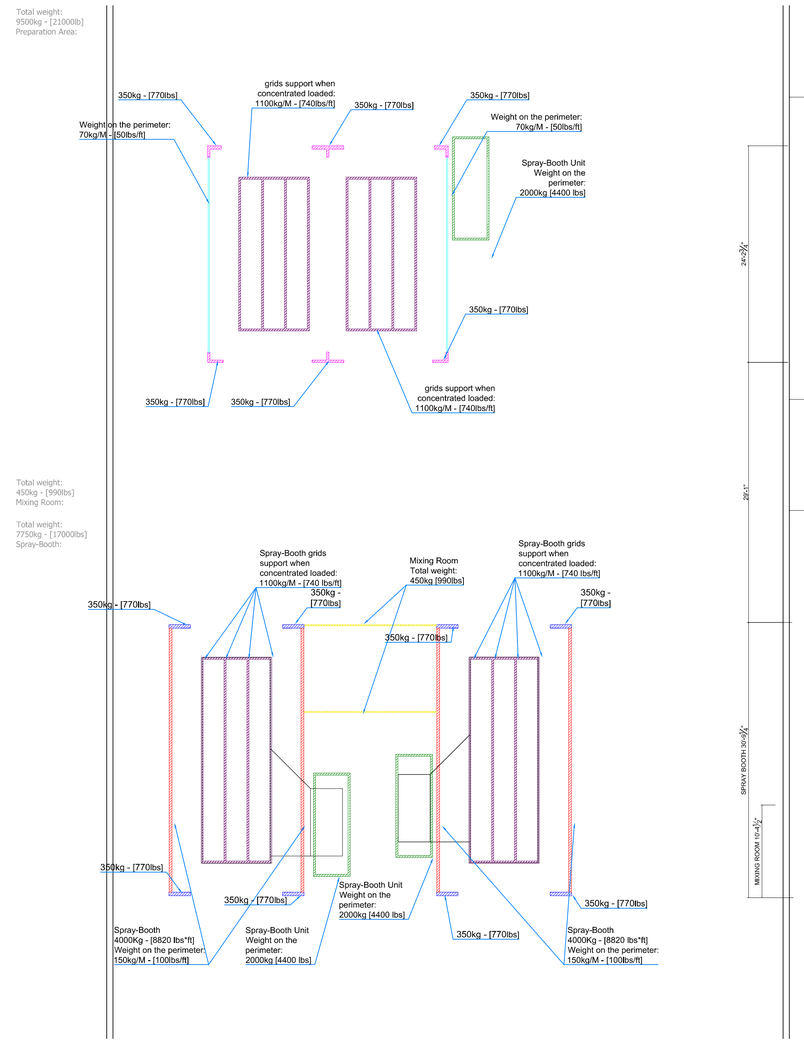

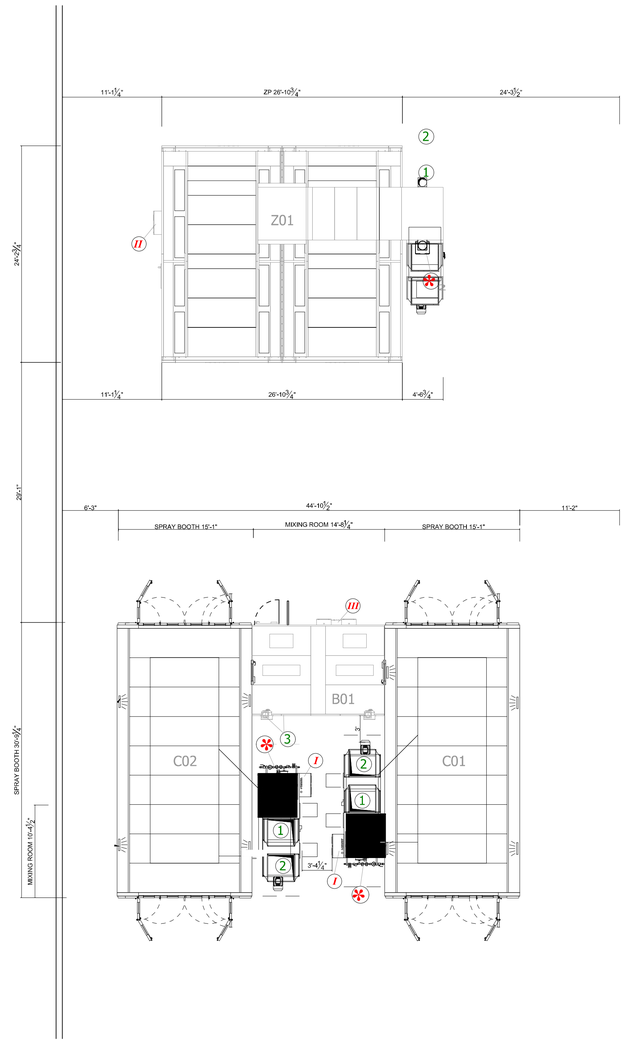

EQUIPMENT WEIGHT PLAN

SCALE: 1/8" = 1'-0"

The installation has been designed based on precise customer's requests, and it is his exclusive responsibility to have a local professional engineer check, at his expense, that the installation complies with local codes in force and to get all necessary permits from the competent authorities. Exclusively at the customer's care and expense are: having a local professional engineer make the calculations pertaining to and deriving from the foundation works; the supply and installation of any profiles to fit into the foundations, hook-ups to the existing structure for supporting and/or fixing materials supplied by USI ITALIA, and getting all necessary permits from the competent authorities.

ITALIA

ALL EQUIPMENT IS DESIGNED EXPRESSLY FOR PAINT PARTICULATE MATTER ONLY. REDUCTION OF "VOLATILE ORGANIC COMPOUNDS" REQUIRES EITHER COATING REMOVAL AND/OR ADDITIONAL OPTIONAL, ADDITIONAL EQUIPMENT.

Intertek

SHOP DIMENSIONS BASED ON BEST AVAILABLE INFORMATION RECEIVED
****DUE TO SHIPPING LIMITATIONS****
-VERIFY EQUIPMENT MODEL NUMBERS IN DRAWING WITH EQUIPMENT ON ORDER.
-FINAL LOCATION OF EQUIPMENT.
-VERIFY ALL DIMENSIONAL DATA.
-VERIFY COMPLIANCE WITH ALL NATIONAL AND LOCAL CODES WITHIN JURISDICTION OF INSTALLATION SITE.
SPECIFICATIONS FOR PERMIT APPLICATION

Copyright © 2023
USI ITALIA
This drawing is not to be reproduced, either in whole or in part, without the permissions of USI ITALIA.

usi north america
PHONE +1 201-405-7760
565 Commerce St, Franklin Lakes, NJ 07417, United States

BY	CHECKED
DMD	DRK

ISSUE	DATE
R0	2023.12.05

PROJECT NAME
TESLA ENGLEWOOD

ENGINEER
RENO JAMES ENGINEERING
303.800.5105
3760 VANCE ST STE 301
WHEAT RIDGE, CO 80033

STAMP

SHEET DESCRIPTION
EQUIPMENT WEIGHT PLAN

SHEET NUMBER
M-1.5

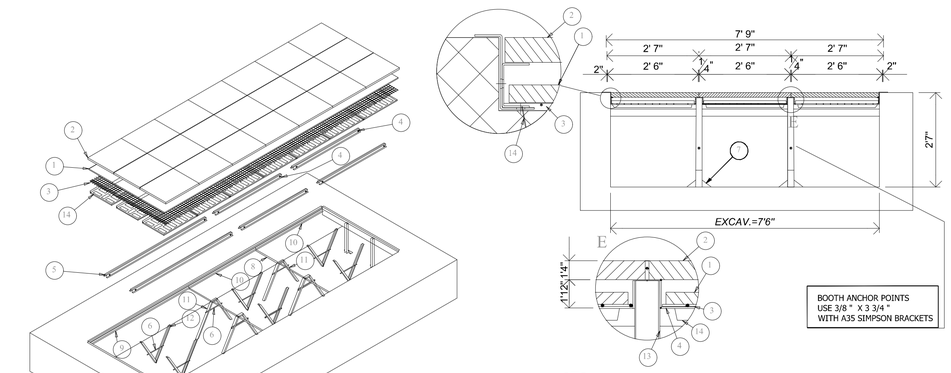

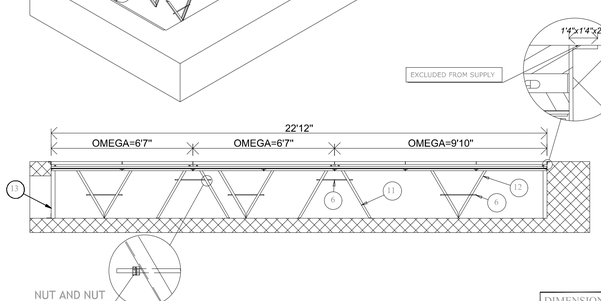

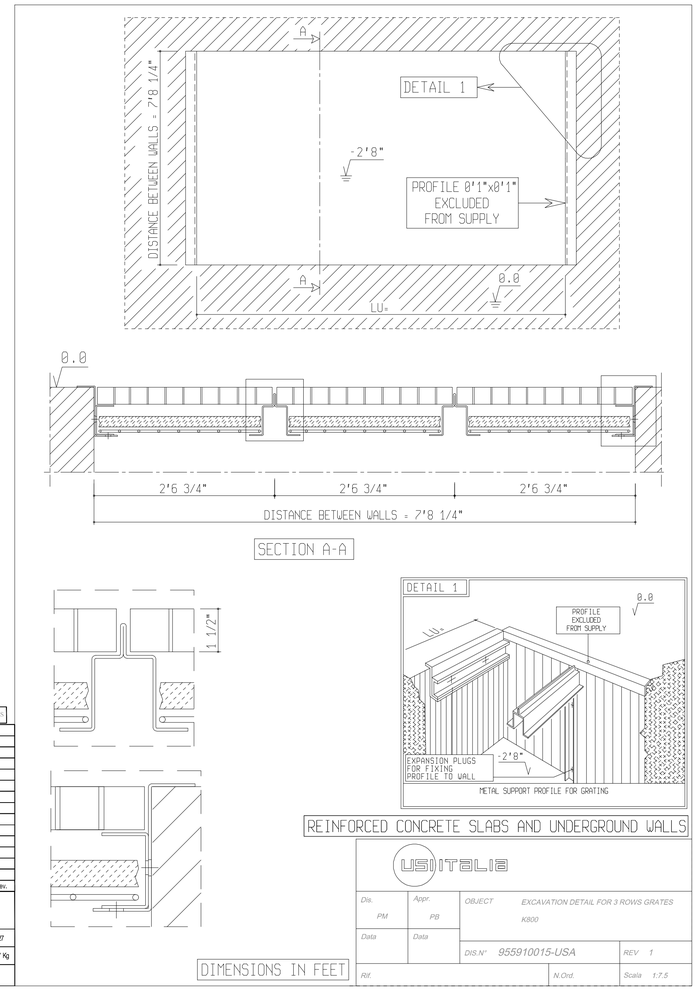

REINFORCED CONCRETE SLABS AND UNDERGROUND WALLS

Pos.	Q.tà	Codice	Description	Weight	Rev.
14	21	541100459	STUDIO TRAY	3,304	00
13	4	541100156	OMEGA HEAD SOPPORT H=757	1,886	
12	6	541100151	ADJUSTABLE SUPPORT H=800 "OMEGA" C/SC	3,642	00
11	4	541100150	ADJUSTABLE REG. CENT. H=800 "OMEGA" C/SC	4,000	
10	4	541100033	PROFILE SOST.LAM.LATER. L=2000	0,916	00
9	2	541100032	PROFILE SOST.LAM.LATER. L=3000	1,375	00
8	2	54100191	TIE ROD OMEGA IRON PAV.TYPE PC38	3,475	00
7	2	54100041	BRACKET FISS. OMEGA HEAD SUPPORTS	0,381	00
6	10	52200066	TIE ROD CENTRAL FEET M10X500	0,039	00
5	2	4587110	PROFILE "OMEGA" 60X60(X30)X2 L=2995 C/SC	1,665	00
4	4	4587100	PROFILE "OMEGA" 60X60(X30)X2 L=1995 C/SC	1,108	00
3	21	4337000	MESH NET 60X60X04 715X1000	0,295	00
2	21	44330100	GRID 772X998X40 WITH GALVANIZED TWISTED SQUARE 34X76X80	30,818	00
1	3	4300100	FILTER GLASS L=750mm	122,500	00

OBJECT: PART. EXCAV. 234.700K800 OM.CSC C/VASC.

DIMENSIONS: 7000 x 2335 x 800 — GROSS WEIGHT: 24834,627

DESIGNER: NR — APPR: — DATA — NET WEIGHT: 24834,627 Kg

DATA — SCALA — DIS.Nº 955920005 — 1/2 — REV.

DIMENSIONS IN MM

USI ITALIA

Dis.	Appr.	OBJECT	EXCAVATION DETAIL FOR 3 ROWS GRATES K800
PM	PB		
Data	Data	DIS.N° 955910015-USA	REV 1
Rif.		N.Ord.	Scala 1:7.5

The installation has been designed based on precise customer's requests, and it is his exclusive responsibility to have a local professional engineer check, at his expense, that the installation complies with local codes in force and to get all necessary permits from the competent authorities. Exclusively at the customer's care and expense are: having a local professional engineer make the calculations pertaining to and deriving from the foundation works; the supply and installation of any profiles to fit into the foundations, hook-ups to the existing structure for supporting and/or fixing materials supplied by USI ITALIA, and getting all necessary permits from the competent authorities.

ALL EQUIPMENT IS DESIGNED EXPRESSLY FOR RETENTION OF PARTICULATE MATTER ONLY. REDUCTION OF "VOLATILE ORGANIC COMPOUNDS" REQUIRES EITHER COATING REMOVAL AND/OR OPTIONAL, ADDITIONAL EQUIPMENT.

Intertek

SHOP DIMENSIONS BASED ON BEST AVAILABLE INFORMATION RECEIVED
****DISTRIBUTION'S RESPONSIBILITY:**
- VERIFY EQUIPMENT MODEL NUMBERS IN DRAWING WITH EQUIPMENT ON ORDER.
- FINAL LOCATION OF EQUIPMENT.
- FIELD VERIFICATION OF DIMENSIONS.
- VERIFY COMPLIANCE WITH ALL NATIONAL AND LOCAL CODES WITHIN JURISDICTION OF INSTALLATION SITE.
SPECIFICATIONS FOR PERMIT APPLICATION

Copyright © 2023 USI ITALIA
This drawing is not to be reproduced, either in whole or in part, without the permissions of USI ITALIA.

made in america
PHONE +1 201-405-7760
565 Commerce St, Franklin Lakes, NJ 07417, United States

BY	CHECKED
DMD	DRK

ISSUE	DATE
R0	2023.12.05

PROJECT NAME
TESLA ENGLEWOOD

ENGINEER
RENO JAMES ENGINEERING
303.800.5105
3760 VANCE ST STE 301
WHEAT RIDGE, CO 80033

STAMP
COLORADO LICENSED
RENO BERG
2023.12.05
40380
PROFESSIONAL ENGINEER

SHEET DESCRIPTION
GENERIC PIT DETAILS

SHEET NUMBER
M-2.1

STANDARD DUCTWORK DETAIL 1

SCALE: 1/2" = 1'

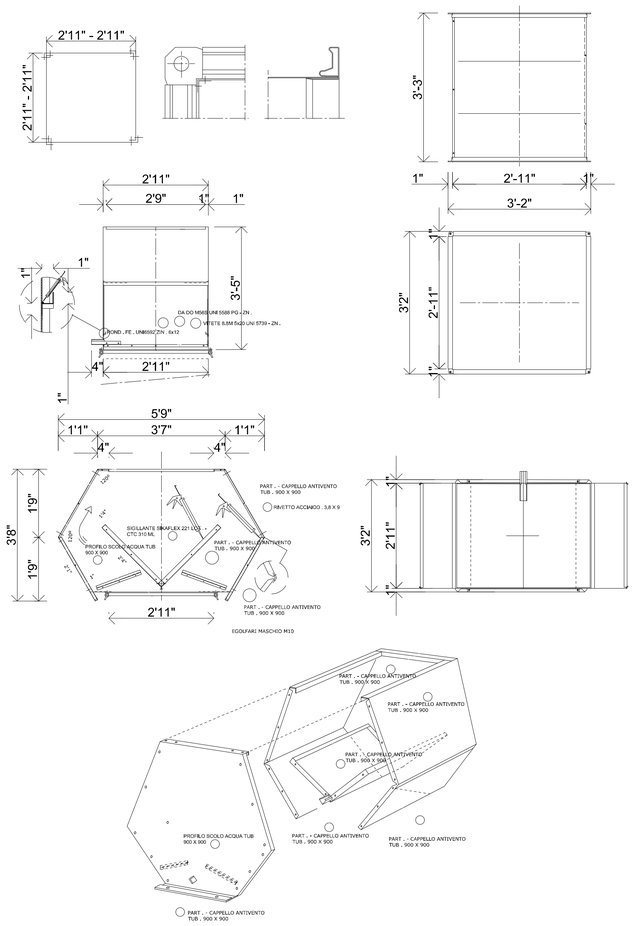

STANDARD DUCTWORK DETAIL 2

SCALE: 1/2" = 1'

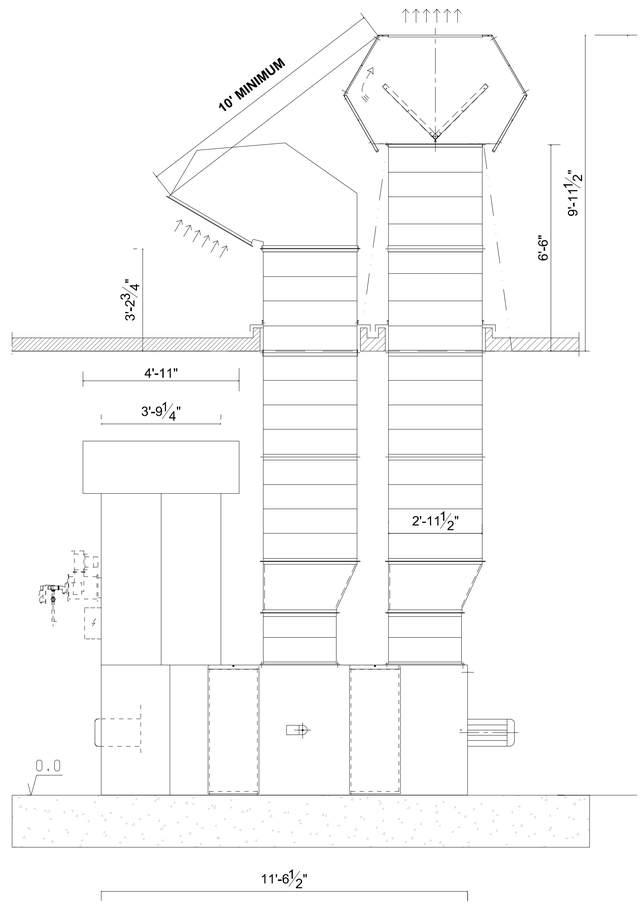

RAC 150 A

STANDARD DUCTWORK DETAIL 3

SCALE: 1/2" = 1'

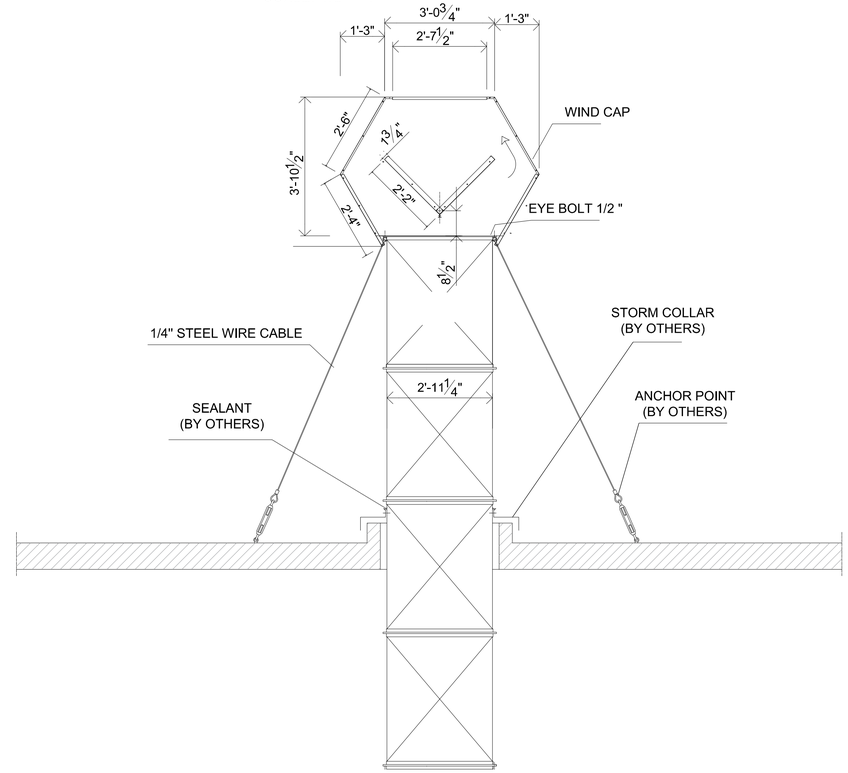

The installation has been designed based on precise customer's requests, and it is his exclusive responsibility to have a local professional engineer check, at his expense, that the installation complies with local codes in force and to get all necessary permits from the competent authorities. Exclusively at the customer's care and expense are: having a local professional engineer make the calculations pertaining to and deriving from the foundation works; the supply and installation of any profiles to fit into the foundations, hook-ups to the existing structure for supporting and/or fixing materials supplied by USI ITALIA, and getting all necessary permits from the competent authorities.

ALL EQUIPMENT IS DESIGNED EXPRESSLY FOR THE REMOVAL OF PARTICULATE MATTER ONLY. REDUCTION OF "VOLATILE ORGANIC COMPOUNDS" REQUIRES EITHER COATING REMOVAL AND/OR OPTIONAL, ADDITIONAL EQUIPMENT.

Intertek

SHOP DIMENSIONS BASED ON BEST AVAILABLE INFORMATION RECEIVED
****DISTRIBUTION IS RESPONSIBILITY:**
-VERIFY EQUIPMENT MODEL NUMBERS IN DRAWING WITH EQUIPMENT ON ORDER.
-FINAL LOCATION OF EQUIPMENT.
-VERIFY ALL DIMENSIONS.
-VERIFY COMPLIANCE WITH ALL NATIONAL AND LOCAL CODES WITHIN JURISDICTION OF INSTALLATION SITE.
SPECIFICATIONS FOR PERMIT APPLICATION

Copyright © 2023 USI ITALIA
This drawing is not to be reproduced, either in whole or in part, without the permissions of USI ITALIA.

PHONE +1 201-405-7760
565 Commerce St, Franklin Lakes, NJ 07417, United States

BY	CHECKED
DMD	DRK

ISSUE	DATE
R0	2023.12.05

PROJECT NAME
TESLA ENGLEWOOD

ENGINEER

RENO JAMES ENGINEERING
303.800.5105
3760 VANCE ST STE 301
WHEAT RIDGE, CO 80033

STAMP

COLORADO LICENSED
RENO JAMES
2023.12.05
40380
PROFESSIONAL ENGINEER

SHEET DESCRIPTION

MECHANICAL DUCTWORK DETAILS

SHEET NUMBER

M-2.2

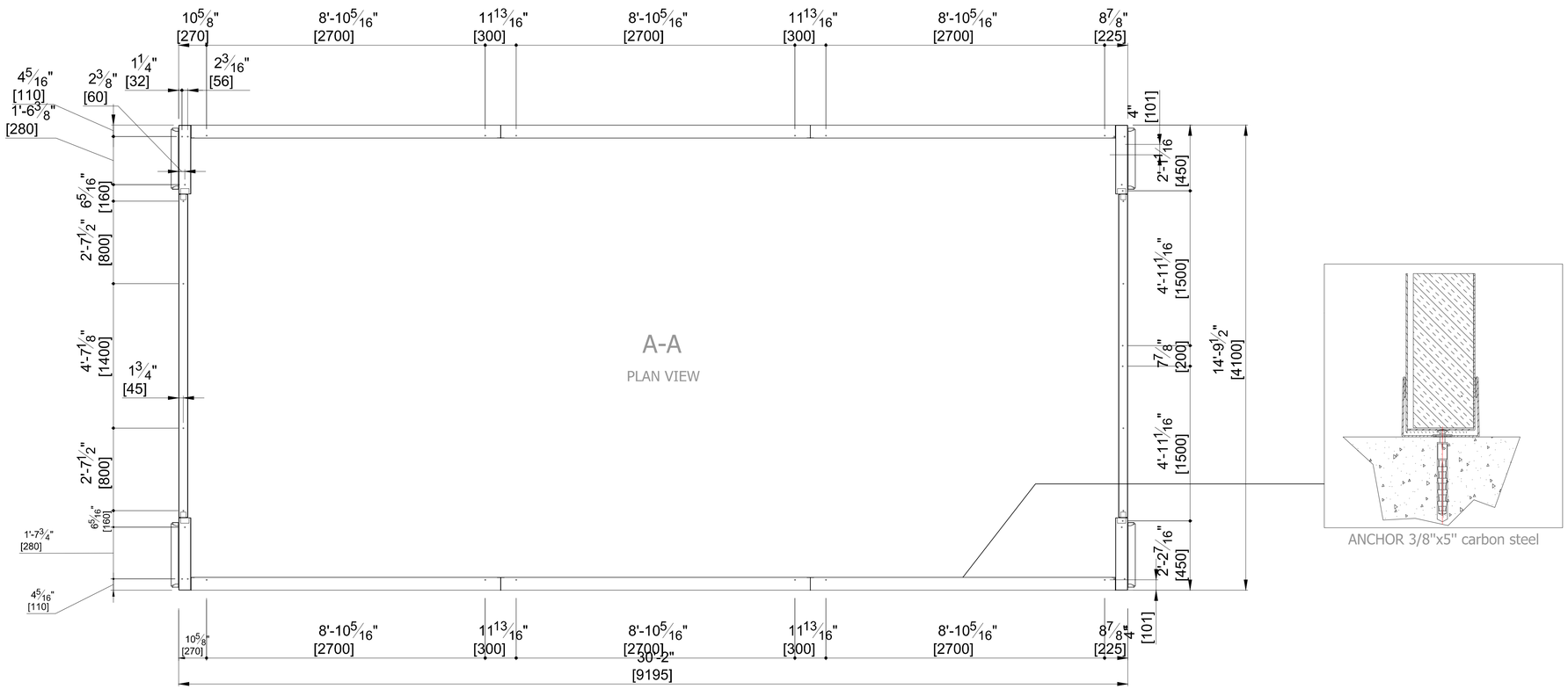

PAINTBOOTH ANCHORING PLAN

SCALE: 1/2" = 1'

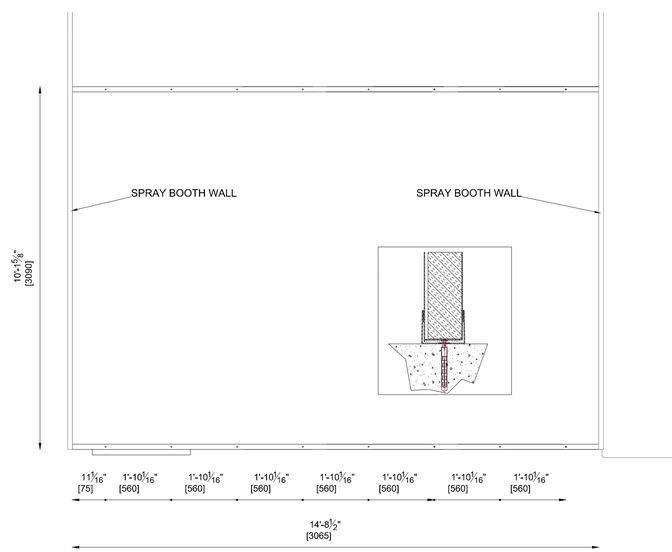

MIXING ROOM ANCHORING PLAN

SCALE: 1/2" = 1'

The installation has been designed based on precise customer's requests, and it is his exclusive responsibility to have a local professional engineer check, at his expense, that the installation complies with local codes in force and to get all necessary permits from the competent authorities. Exclusively at the customer's care and expense are: having a local professional engineer make the calculations pertaining to and deriving from the foundation works; the supply and installation of any profiles to fit into the foundations, hook-ups to the existing structure for supporting and/or fixing materials supplied by USI ITALIA, and getting all necessary permits from the competent authorities.

ALL EQUIPMENT IS DESIGNED EXPRESSLY FOR THE REMOVAL OF PARTICULATE MATTER ONLY. REDUCTION OF "VOLATILE ORGANIC COMPOUNDS" REQUIRES EITHER COATING REFORMULATION OR OPTIONAL, ADDITIONAL EQUIPMENT.

Intertek

SHOP DIMENSIONS BASED ON BEST AVAILABLE INFORMATION RECEIVED
***DISTRIBUTORS RESPONSABILITY:**
-VERIFY EQUIPMENT MODEL NUMBERS IN DRAWING WITH EQUIPAMENT ON ORDER.
-FINAL LOCATION OF EQUIPAMENT.
-FIELD VERIFY ALL DIMENSIONS.
-VERIFY COMPLIANCE WITH ALL NATIONAL AND LOCAL CODES WITHIN JURISDICTION OF INSTALLATION SITE.
SPECIFICATIONS FOR PERMIT APPLICATION

Copyright © 2023 USI ITALIA
This drawing is not to be reproduced, either in whole or in part without the permissions of USI Italia.

PHONE +1 201-405-7760
565 Commerce St, Franklin Lakes, NJ 07417, United States

BY	CHECKED
DMD	DRK

ISSUE	DATE
R0	2023.12.05

PROJECT NAME
TESLA ENGLEWOOD

ENGINEER
RENO JAMES ENGINEERING
303.800.5105
3760 VANCE ST STE 301
WHEAT RIDGE, CO 80033

STAMP

COLORADO LICENSED PROFESSIONAL ENGINEER
DANIEL RENO BERNING
2023.12.08
40380

SHEET DESCRIPTION
ANCHORING PLAN - PAINT AND MIXING BOOTH

SHEET NUMBER
M-2.3

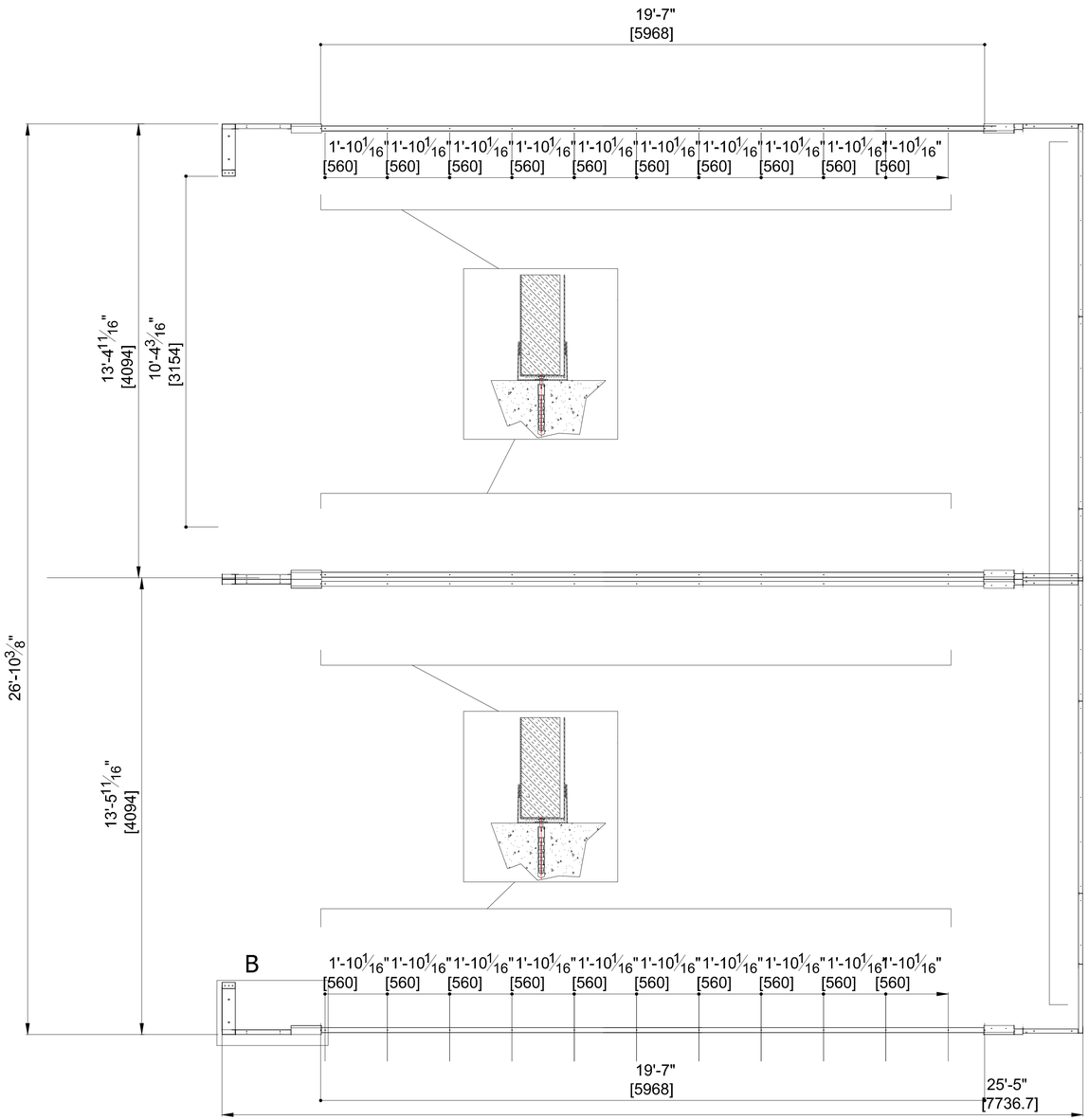

LIMITED FINISH WORKSTATION ANCHORING PLAN

SCALE: 1/2" = 1'

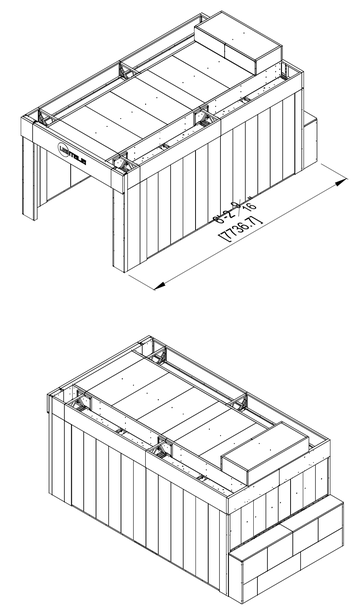

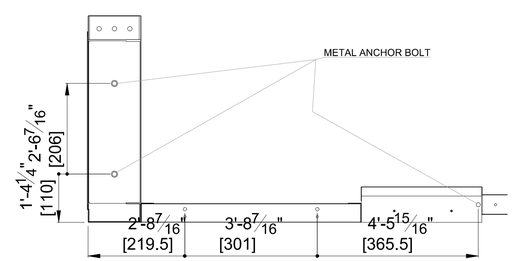

The installation has been designed based on precise customer's requests, and it is his exclusive responsibility to have a local professional engineer check, at his expense, that the installation complies with local codes in force and to get all necessary permits from the competent authorities. Exclusively at the customer's care and expense are: having a local professional engineer make the calculations pertaining to and deriving from the foundation works; the supply and installation of any profiles to fit into the foundations, hook-ups to the existing structure for supporting and/or fixing materials supplied by USI ITALIA, and getting all necessary permits from the competent authorities.

ALL EQUIPMENT IS DESIGNED EXPRESSLY FOR THE REMOVAL OF PARTICULATE MATTER ONLY. REDUCTION OF "VOLATILE ORGANIC COMPOUNDS" REQUIRES EITHER COATING REFORMULATION OR OPTIONAL, ADDITIONAL EQUIPMENT.

Intertek

SHOP DIMENSIONS BASED ON BEST AVAILABLE INFORMATION RECEIVED
***DISTRIBUTORS RESPONSABILITY:**
-VERIFY EQUIPMENT MODEL NUMBERS IN DRAWING WITH EQUIPMENT ON ORDER.
-FINAL LOCATION OF EQUIPMENT.
-FIELD VERIFY ALL DIMENSIONS.
-VERIFY COMPLIANCE WITH ALL NATIONAL AND LOCAL CODES WITHIN JURISDICTION OF INSTALLATION SITE.
SPECIFICATIONS FOR PERMIT APPLICATION

Copyright © 2023 USI ITALIA
This drawing is not to be reproduced, either in whole or in part without the permissions of USI Italia.

PHONE +1 201-405-7760
565 Commerce St, Franklin Lakes, NJ 07417, United States

BY	CHECKED
DMD	DRK

ISSUE	DATE
R0	2023.12.05

PROJECT NAME
TESLA ENGLEWOOD

ENGINEER
RENO JAMES ENGINEERING
303.800.5105
3760 VANCE ST STE 301
WHEAT RIDGE, CO 80033

STAMP

SHEET DESCRIPTION
ANCHORING PLAN - LIMITED FINISHING WORKSTATION

SHEET NUMBER
M-2.4

MASONRY

COBRA ANCHORS ▶ FIXATIONS

Parawedge™

SPECIFICATIONS, LISTINGS AND APPROVALS

CARBON STEEL

Anchor Component: Carbon steel
Anchor Body: AISI 1018 for 1/4" and AISI 1008 for 3/8"- 3/4"
Nut: Carbon steel, ASTM A563, Grade A
Washer: AISI 1010 carbon steel, meets dimensional requirements of ANSI/ASME 18.22.1, Type A plain
Expansion Wedge: Tempered AISI 1008/1010 carbon steel
Plating: Zinc ASTM B633,SC1, Type III (Fe/Zn 5)
All diameters are anchors of CATEGORY 1

STAINLESS STEEL

Anchor Component: Stainless steel
Anchor Body: AISI 304 HQ SS
Nut: SS 304
Washer: SS 304
Expansion Wedge: SS 304

FEATURES

- Anchor size = Hole size
- Fast & easy to install
- Cold roll formed thread
- Full thread design
- Chamfered head
- Length Identification
- Unique Parabolic Design
- Double Expansion Clip
- Taper Shape Clip

MATERIALS

Concrete

CERTIFICATIONS & APPROVALS

PARAWEDGE™ ANCHOR

Seismic, cracked & uncracked concrete rated / approved (ICC-ES) *

- ICC Evaluation Service Inc. #ESR-3852
  - All diameters are Category 1
  - Meets ACI 318-14 ductility requirements
  - 2015 IBC compliant
  - Tested in accordance with ACI 355.2 and ICC-ES AC193
  - 1/4" diameter is used in uncracked concrete applications (Seismic Design Categories A & B).
  - 3/8", 1/2", 5/8" and 3/4" are used in uncracked and cracked concrete applications (Seismic Design Categories A through F).
- FM approvals
- Underwriters Laboratories (UL)
- Los Angeles Research Reports (LARR) *
- FBC supplement

ESR-3852
International Code Council Evaluation Service

PIPE HANGER 6838
Underwriter Laboratory

LARR #26043
Los Angeles Research Reports

FM APPROVED
FM Approvals (Factory Mutual Laboratories)

MADE IN USA

*ICC-ES and LARR certifications are for Carbon Steel Parawedge only.

TABLE 2 — CERTIFICATION CHARTS

REGULAR CARBON STEEL PARAWEDGE

ANCHOR PARAMETERS *			CERTIFICATIONS (for Carbon Steel only)			
Size	Thread Length	Component	c UL us PIPE HANGER 6838	FM APPROVED	ICC ES ESR-3852	LARR #26043
1/4" x 1-3/4"	3/4"	Carbon Steel			●	●
1/4" x 2-1/4"	1-1/4"	Carbon Steel			●	●
1/4" x 3-1/4"	2-1/4"	Carbon Steel			●	●
3/8" x 2-1/4"	1-1/8"	Carbon Steel	●	●	●	●
3/8" x 2-3/4"	1-1/2"	Carbon Steel	●	●	●	●
3/8" x 3"	1-3/4"	Carbon Steel	●	●	●	●
3/8" x 3-3/4"	2-1/2"	Carbon Steel	●	●	●	●
3/8" x 5"	3-1/2"	Carbon Steel	●	●	●	●
3/8" x 6-1/2"	3"	Carbon Steel		●		
1/2" x 2-3/4"	1-1/2"	Carbon Steel	●	●	●	●
1/2" x 3-3/4"	2-1/4"	Carbon Steel	●	●	●	●
1/2" x 4-1/4"	2-3/4"	Carbon Steel	●	●	●	●
1/2" x 5-1/2"	3-1/4"	Carbon Steel	●	●	●	●
1/2" x 7"	4"	Carbon Steel		●	●	●
1/2" x 8-1/2"	3"	Carbon Steel		●		
1/2" x 10"	3"	Carbon Steel		●		
5/8" x 3-1/2"	1-1/2"	Carbon Steel	●	●	●	●
5/8" x 4-1/2"	2-1/2"	Carbon Steel	●	●	●	●
5/8" x 5"	3"	Carbon Steel	●	●	●	●
5/8" x 6"	4"	Carbon Steel	●	●	●	●
5/8" x 7"	4"	Carbon Steel		●	●	●
5/8" x 8-1/2"	3"	Carbon Steel		●		
5/8" x 10"	3"	Carbon Steel		●		
5/8" x 12"	3"	Carbon Steel				
3/4" x 4-1/4"	2"	Carbon Steel	●	●	●	●
3/4" x 4-3/4"	2-1/2"	Carbon Steel	●	●	●	●
3/4" x 5-1/2"	3-1/4"	Carbon Steel	●	●	●	●
3/4" x 6-1/4"	4"	Carbon Steel	●	●	●	●
3/4" x 7"	4"	Carbon Steel		●	●	●
3/4" x 8-1/2"	3"	Carbon Steel		●		
3/4" x 10"	3"	Carbon Steel		●		
3/4" x 12"	3"	Carbon Steel		●		
7/8" x 6"	2-1/4"	Carbon Steel				
7/8" x 8"	3"	Carbon Steel				
7/8" x 10"	3"	Carbon Steel				
1" x 6"	2-1/4"	Carbon Steel				
1" x 9"	3"	Carbon Steel				
1" x 12"	3"	Carbon Steel				
1-1/4" x 9"	3"	Carbon Steel				
1-1/4" x 12"	3"	Carbon Steel				

* For a complete list of the different packaging formats a

MASONRY

COBRA ANCHORS ▶ FIXATIONS

Parawedge™

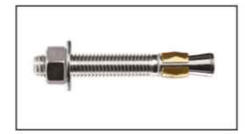

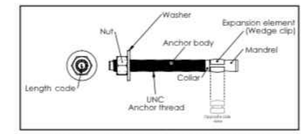

FIGURE 1 – PARAWEDGE™ ANCHOR ASSEMBLY

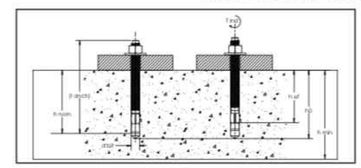

FIGURE 2 – PARAWEDGE™ ANCHOR DETAIL

TABLE 3 – PARAWEDGE™ ANCHOR DESIGN AND INSTALLATION INFORMATIN[1] - FOR CARBON STEEL

Setting and Design Information	Symbol	Units	Nominal anchor diameter				
			1/4"	3/8"	1/2"	5/8"	3/4"
Anchor O.D.	$d_a(d_o)^2$	in. (mm)	0.250 (6.4)	0.375 (9.5)	0.500 (12.7)	0.625 (15.9)	0.750 (19.1)
Nominal drill bit dia.	d_{bit}	in. (mm)	1/4 (6.4)	3/8 (9.5)	1/2 (12.7)	5/8 (15.9)	3/4 (19.1)
Nominal embedment depth	h_{nom}	in. (mm)	1-3/4 (44)	2-1/2 (63)	2-7/8 (73)	3-1/2 (89)	4 (102)
Effective min. embedment	h_{ef}	in. (mm)	1-1/2 (38)	2 (51)	2-1/4 (57)	2-3/4 (70)	3-1/8 (79)
Min. hole depth	h_{hole}	in. (mm)	2 (51)	2-5/8 (67)	3 (76)	3-5/8 (92)	4-1/8 (105)
Min. member tickness	h_{min}	in. (mm)	4 (102)	4 (102)	4-1/2 (114)	5-1/2 (140)	6 (152)
Critical edge distance	c_{ac}	in. (mm)	2-1/2 (64)	5-1/2 (140)	7 (178)	6 (152)	9 (229)
Min. edge distance	c_{min}	in. (mm)	2 (51)	2-1/2 (64)	3-1/4 (83)	4-1/2 (114)	4-3/4 (121)
Min. anchor spacing	s_{min}	in. (mm)	3 (76)	3 (76)	6-1/2 (165)	5-1/2 (140)	6-1/4 (159)
Installation torque	T_{inst}	ft-lb (Nm)	10 (14)	30 (41)	50 (68)	70 (95)	120 (163)

For **SI:** 1 inch = 25.4 mm, 1lbf = 4.45 N, 1Psi = 0.006895 MPa. For **pound-in** units: 1 mm = 0.03937 inches.

[1] The information presented in this table is to be used in conjunction with the design criteria of ACI 318-14 Chapter 17 or ACI 318-11 Appendix D, as applicable.
[2] The notation in parenthesis is for the 2006 IBC.

ANCHORING SELECTION

NOT TO SCALE

The installation has been designed based on precise customer's requests, and it is his exclusive responsibility to have a local professional engineer check, at his expense, that the installation complies with local codes in force and to get all necessary permits from the competent authorities. Exclusively at the customer's care and expense are: having a local professional engineer make the calculations pertaining to and deriving from the foundation works; the supply and installation of any profiles to fit into the foundations, hook-ups to the existing structure for supporting and/or fixing materials supplied by USI ITALIA, and getting all necessary permits from the competent authorities.

ALL EQUIPMENT IS DESIGNED EXPRESSLY FOR THE PERMANENT PARTICULATE MATTER ONLY. REDUCTION OF "VOLATILE ORGANIC COMPOUNDS" REQUIRES EITHER COATING REMOVAL AND/OR A OPTIONAL, ADDITIONAL EQUIPMENT.

Intertek

SHOP DIMENSIONS BASED ON BEST AVAILABLE INFORMATION RECEIVED
**** DISTRIBUTION RESPONSIBILITY:**
-VERIFY EQUIPMENT MODEL NUMBERS IN DRAWING WITH EQUIPMENT ON ORDER.
-FINAL LOCATION OF EQUIPMENT.
-FIELD VERIFICATION OF DIMENSIONS.
-VERIFY COMPLIANCE WITH ALL NATIONAL AND LOCAL CODES WITHIN JURISDICTION OF INSTALLATION SITE.
SPECIFICATIONS FOR PERMIT APPLICATION

Copyright © 2023 USI ITALIA
This drawing is not to be reproduced, either in whole or in part, without the permissions of USI Italia.

usi italia america
PHONE +1 201-405-7760
565 Commerce St, Franklin Lakes, NJ 07417, United States

BY	CHECKED
DMD	DRK

ISSUE	DATE
R0	2023.12.05

PROJECT NAME
TESLA ENGLEWOOD

ENGINEER
RENO JAMES ENGINEERING
303.800.5105
3760 VANCE ST STE 301
WHEAT RIDGE, CO 80033

STAMP
COLORADO LICENSED RENO JAMES 2023.12.18 40380 PROFESSIONAL ENGINEER

SHEET DESCRIPTION
CONCRETE ANCHORING DETAILS AND CONSTRUCTION

SHEET NUMBER
M-2.5

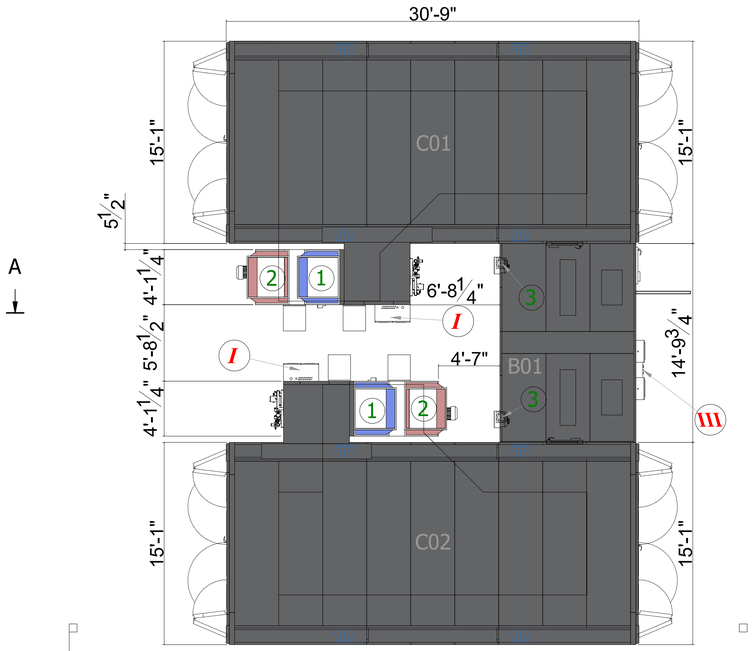

PLAN VIEW

SCALE: 1/4" = 1'

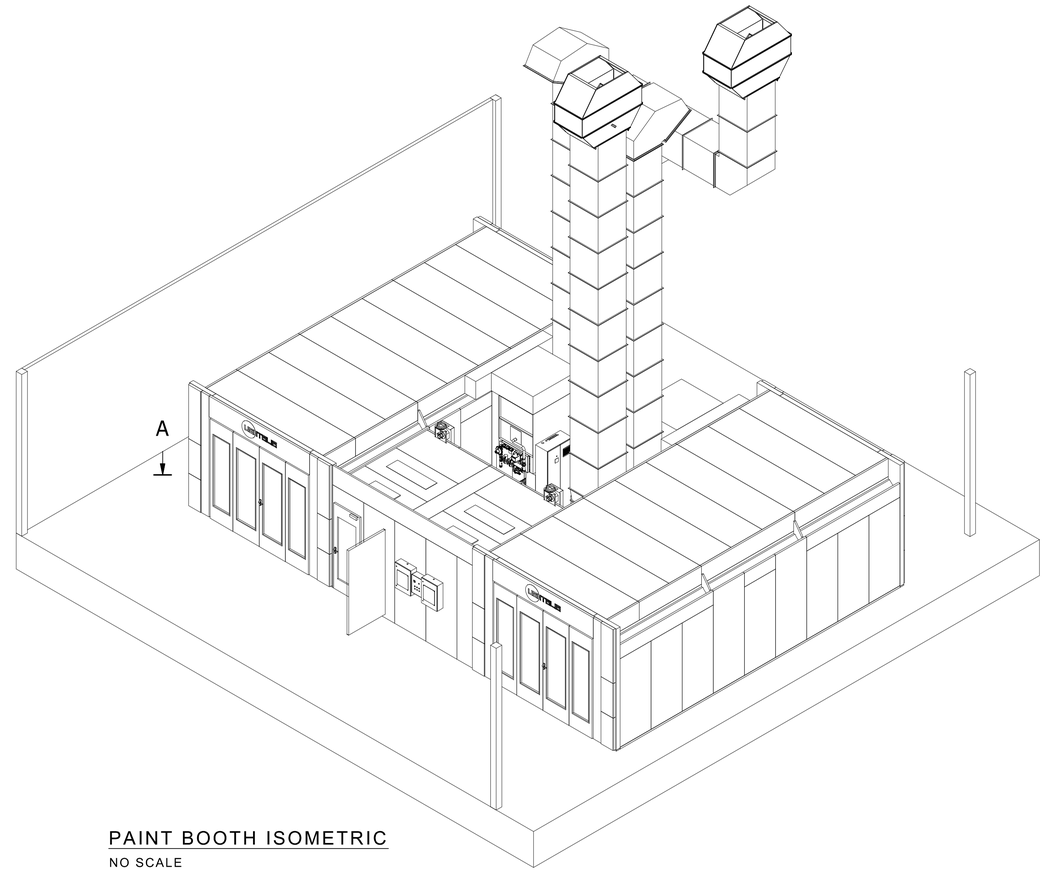

PAINT BOOTH ISOMETRIC

NO SCALE

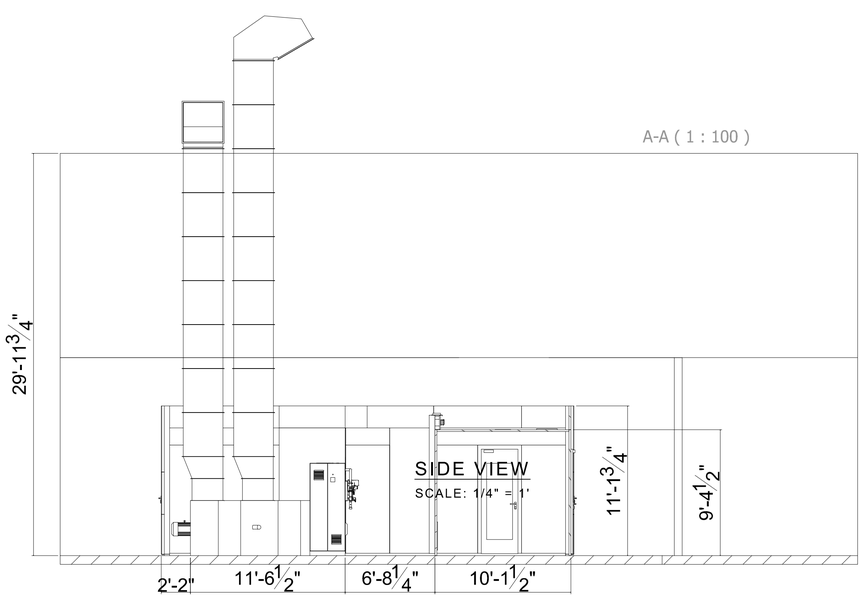

SIDE VIEW

SCALE: 1/4" = 1'

REAR VIEW

SCALE: 1/4" = 1'

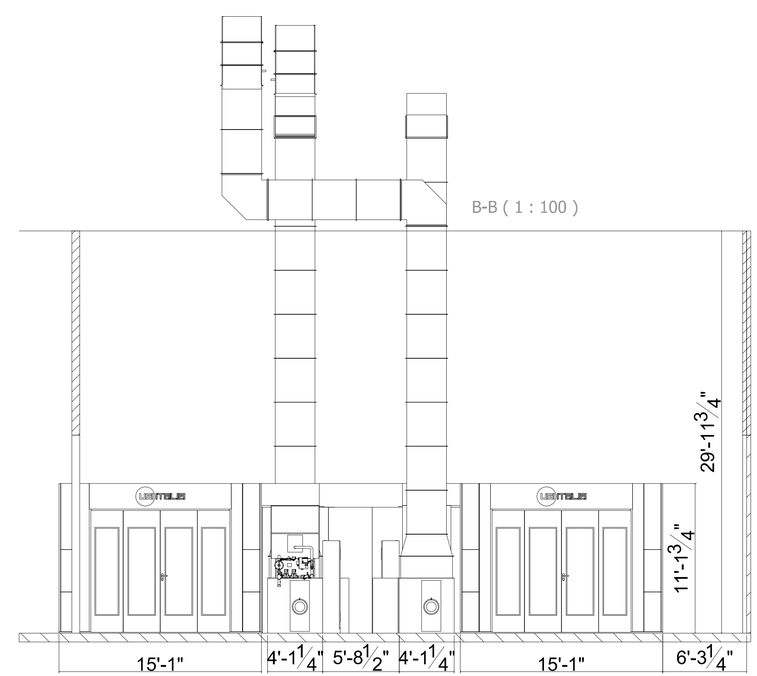

FRONT VIEW

SCALE: 1/4" = 1'

The installation has been designed based on precise customer's requests, and it is his exclusive responsibility to have a local professional engineer check, at his expense, that the installation complies with local codes in force and to get all necessary permits from the competent authorities. Exclusively at the customer's care and expense are: having a local professional engineer make the calculations pertaining to and deriving from the foundation works; the supply and installation of any profiles to fit into the foundations, hook-ups to the existing structure for supporting and/or fixing materials supplied by USI ITALIA, and getting all necessary permits from the competent authorities.

ALL EQUIPMENT IS DESIGNED EXPRESSLY FOR THE REMOVAL OF PARTICULATE MATTER ONLY. REDUCTION OF "VOLATILE ORGANIC COMPOUNDS" REQUIRES EITHER COATING REMOVAL AND/OR OPTIONAL, ADDITIONAL EQUIPMENT.

Intertek

SHOP DIMENSIONS BASED ON BEST AVAILABLE INFORMATION RECEIVED
****DISTRIBUTORS RESPONSIBILITY:**
-VERIFY EQUIPMENT MODEL NUMBERS IN DRAWING WITH EQUIPMENT ON ORDER.
-FINAL LOCATION OF EQUIPMENT.
-VERIFY ALL DIMENSIONS.
-VERIFY COMPLIANCE WITH ALL NATIONAL AND LOCAL CODES WITHIN JURISDICTION OF INSTALLATION SITE.
SPECIFICATIONS FOR PERMIT APPLICATION

Copyright © 2023
USI ITALIA
This drawing is not to be reproduced, either in whole or in part, without the permissions of USI ITALIA

PHONE +1 201-405-7760
565 Commerce St, Franklin Lakes,
NJ 07417, United States

BY	CHECKED
DMD	DRK

ISSUE	DATE
R0	2023.12.05

PROJECT NAME

TESLA ENGLEWOOD

ENGINEER

RENO JAMES ENGINEERING
303.800.5105
3760 VANCE ST STE 301
WHEAT RIDGE, CO 80033

STAMP

COLORADO LICENSED
DAVID RENO JAMES
2023.12.08
40380
PROFESSIONAL ENGINEER

SHEET DESCRIPTION

VIEWS AND ISOMETRIC - PAINT BOOTH

SHEET NUMBER

M-3.1

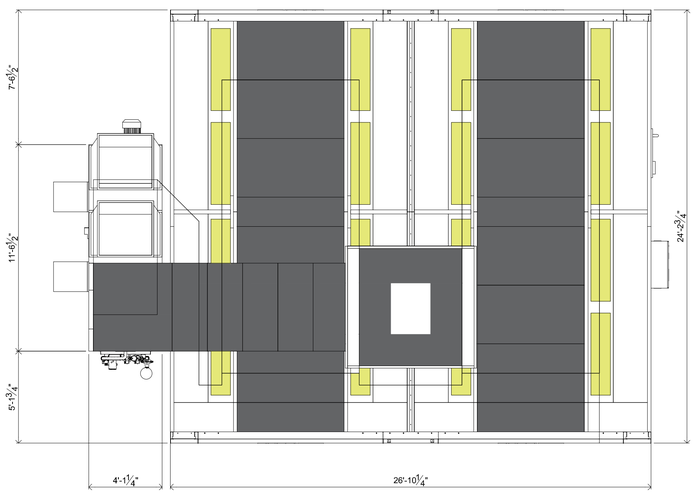

PLAN VIEW

SCALE: 1/4" = 1'

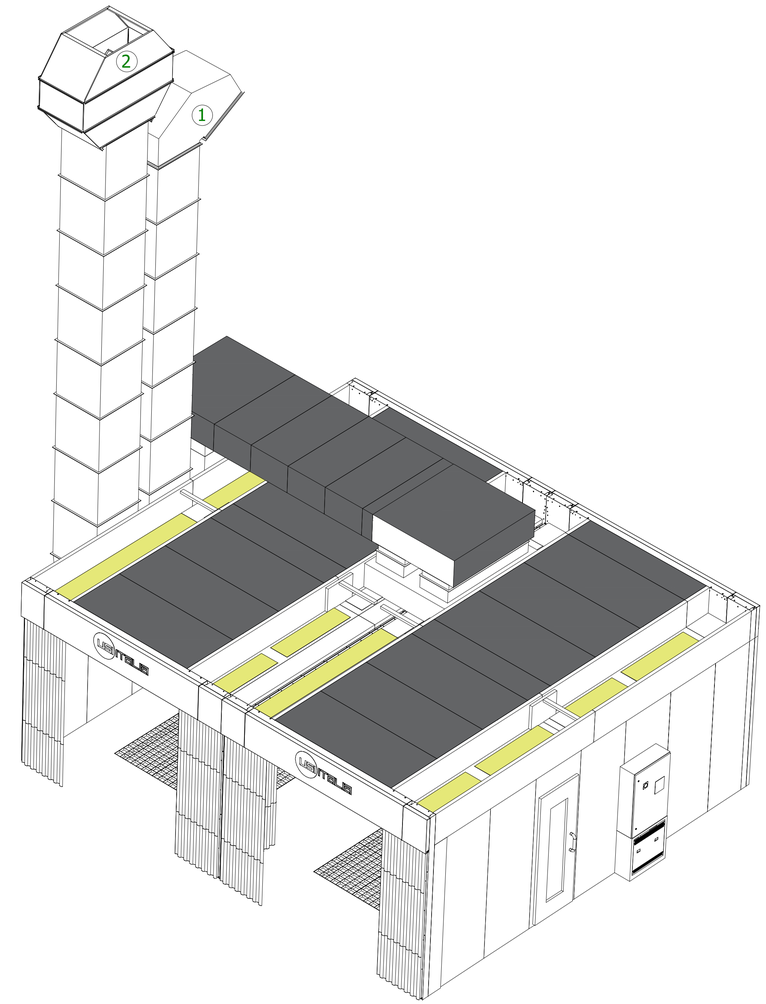

LIMITED FINISH WORKSTATION ISOMETRIC

NO SCALE

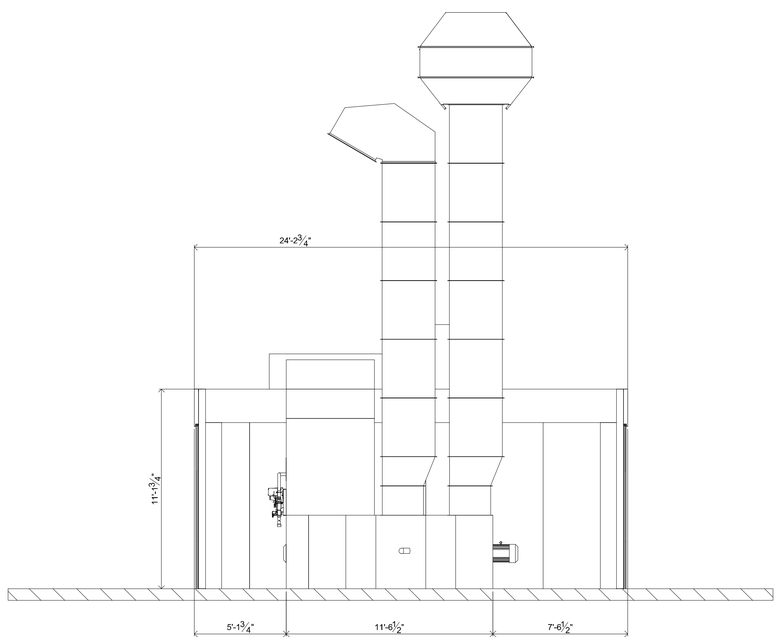

SIDE VIEW

SCALE: 1/4" = 1'

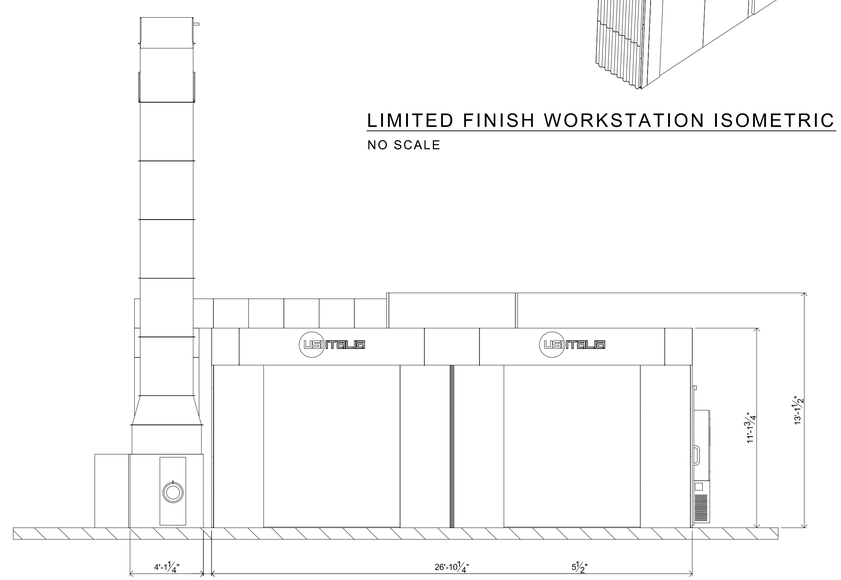

FRONT VIEW

SCALE: 1/4" = 1'

The installation has been designed based on precise customer's requests, and it is his exclusive responsibility to have a local professional engineer check, at his expense, that the installation complies with local codes in force and to get all necessary permits from the competent authorities. Exclusively at the customer's care and expense are: having a local professional engineer make the calculations pertaining to and deriving from the foundation works; the supply and installation of any profiles to fit into the foundations, hook-ups to the existing structure for supporting and/or fixing materials supplied by USI ITALIA, and getting all necessary permits from the competent authorities.

ALL EQUIPMENT IS DESIGNED EXPRESSLY FOR THE REMOVAL OF PARTICULATE MATTER ONLY. REDUCTION OF "VOLATILE ORGANIC COMPOUNDS" REQUIRES EITHER COATING REFORMULATION OR OPTIONAL, ADDITIONAL EQUIPMENT.

Intertek

SHOP DIMENSIONS BASED ON BEST AVAILABLE INFORMATION RECEIVED
***DISTRIBUTORS RESPONSABILITY:**
-VERIFY EQUIPMENT MODEL NUMBERS IN DRAWING WITH EQUIPMENT ON ORDER.
-FINAL LOCATION OF EQUIPMENT.
-FIELD VERIFY ALL DIMENSIONS.
-VERIFY COMPLIANCE WITH ALL NATIONAL AND LOCAL CODES WITHIN JURISDICTION OF INSTALLATION SITE.
SPECIFICATIONS FOR PERMIT APPLICATION

Copyright © 2023 USI ITALIA
This drawing is not to be reproduced, either in whole or in part without the permissions of USI Italia.

PHONE +1 201-405-7760
565 Commerce St, Franklin Lakes, NJ 07417, United States

BY	CHECKED
DMD	DRK

ISSUE	DATE
R0	2023.12.05

PROJECT NAME

TESLA ENGLEWOOD

ENGINEER

RENO JAMES ENGINEERING
303.800.5105
3760 VANCE ST STE 301
WHEAT RIDGE, CO 80033

STAMP

SHEET DESCRIPTION

VIEWS AND ISOMETRIC - LIMITED FINISHING WORKSTATION

SHEET NUMBER

M-3.2

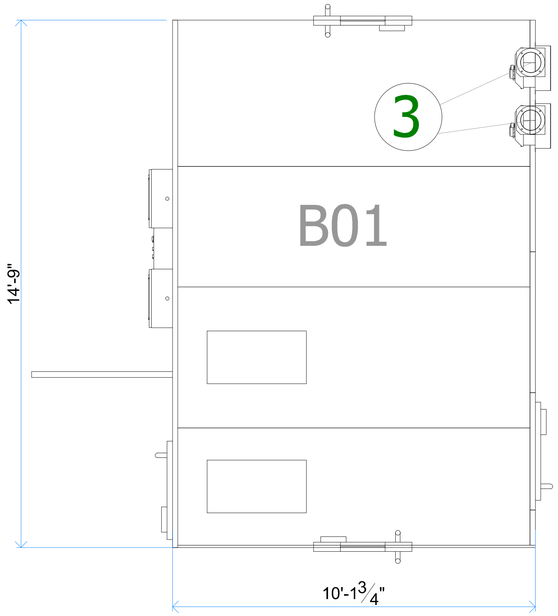

PLAN VIEW

SCALE: 1/4" = 1'

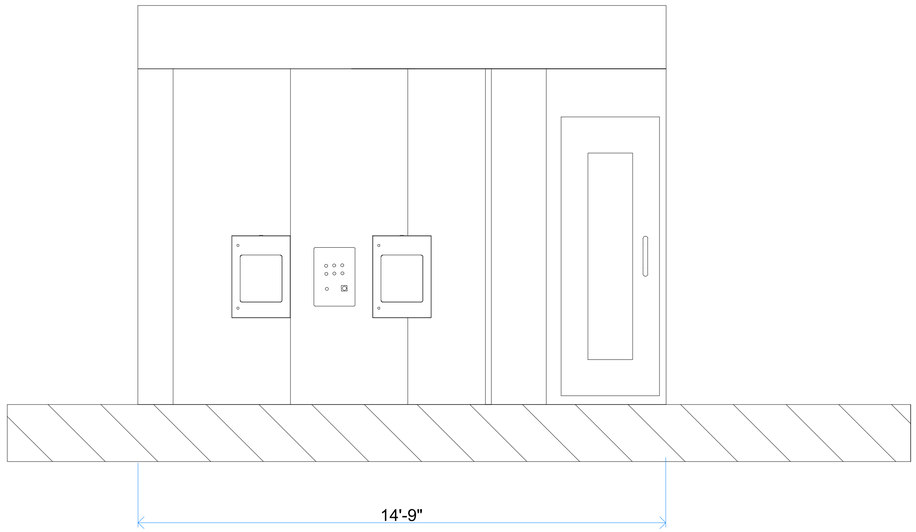

FRONT VIEW

SCALE: 1/4" = 1'

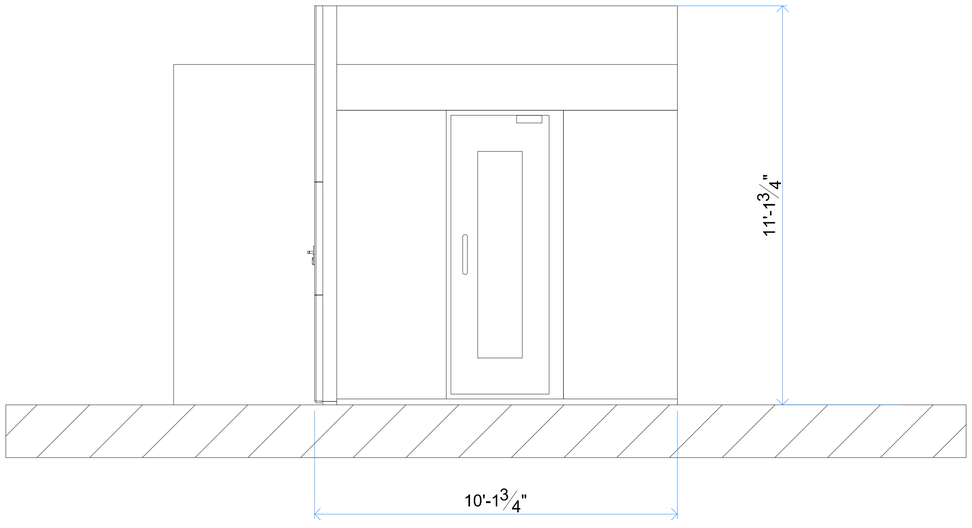

SIDE VIEW

SCALE: 1/4" = 1'

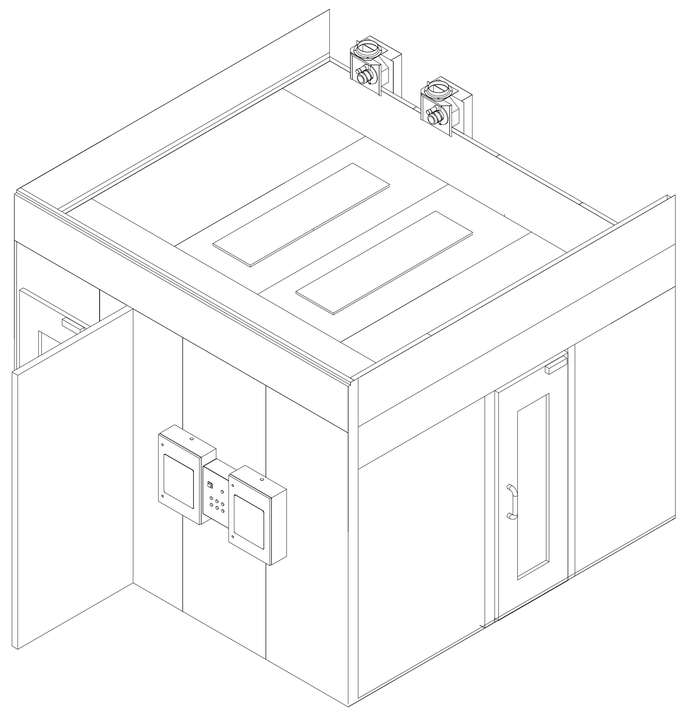

MIXING BOOTH ISOMETRIC

NO SCALE

The installation has been designed based on precise customer's requests, and it is his exclusive responsibility to have a local professional engineer check, at his expense, that the installation complies with local codes in force and to get all necessary permits from the competent authorities. Exclusively at the customer's care and expense are: having a local professional engineer make the calculations pertaining to and deriving from the foundation works; the supply and installation of any profiles to fit into the foundations, hook-ups to the existing structure for supporting and/or fixing materials supplied by USI ITALIA, and getting all necessary permits from the competent authorities.

ALL EQUIPMENT IS DESIGNED EXPRESSLY FOR "REMOVAL OF PARTICULATE MATTER ONLY. REDUCTION OF "VOLATILE ORGANIC COMPOUNDS" REQUIRES EITHER COATING REMOVAL AND/OR ADDITIONAL OPTIONAL, ADDITIONAL EQUIPMENT.

Intertek

SHOP DIMENSIONS BASED ON BEST AVAILABLE INFORMATION RECEIVED
****INSTRUCTIONS RESPONSIBILITY:**
-VERIFY EQUIPMENT MODEL NUMBERS IN DRAWING WITH EQUIPMENT ON ORDER.
-FINAL LOCATION OF EQUIPMENT.
-VERIFY ALL DIMENSIONS.
-VERIFY COMPLIANCE WITH ALL NATIONAL AND LOCAL CODES WITHIN JURISDICTION OF INSTALLATION SITE.
SPECIFICATIONS FOR PERMIT APPLICATION

Copyright © 2023
USI ITALIA
This drawing is not to be reproduced, either in whole or in part, without the permissions of USI ITALIA.

PHONE +1 201-405-7760
565 Commerce St, Franklin Lakes, NJ 07417, United States

BY	CHECKED
DMD	DRK

ISSUE	DATE
R0	2023.12.05

PROJECT NAME

TESLA ENGLEWOOD

ENGINEER

RENO JAMES ENGINEERING
303.800.5105
3760 VANCE ST STE 301
WHEAT RIDGE, CO 80033

STAMP

COLORADO LICENSED
RENO JAMES
2023.12.08
40380
PROFESSIONAL ENGINEER

SHEET DESCRIPTION

VIEWS AND ISOMETRIC - MIXING ROOM

SHEET NUMBER

M-3.3

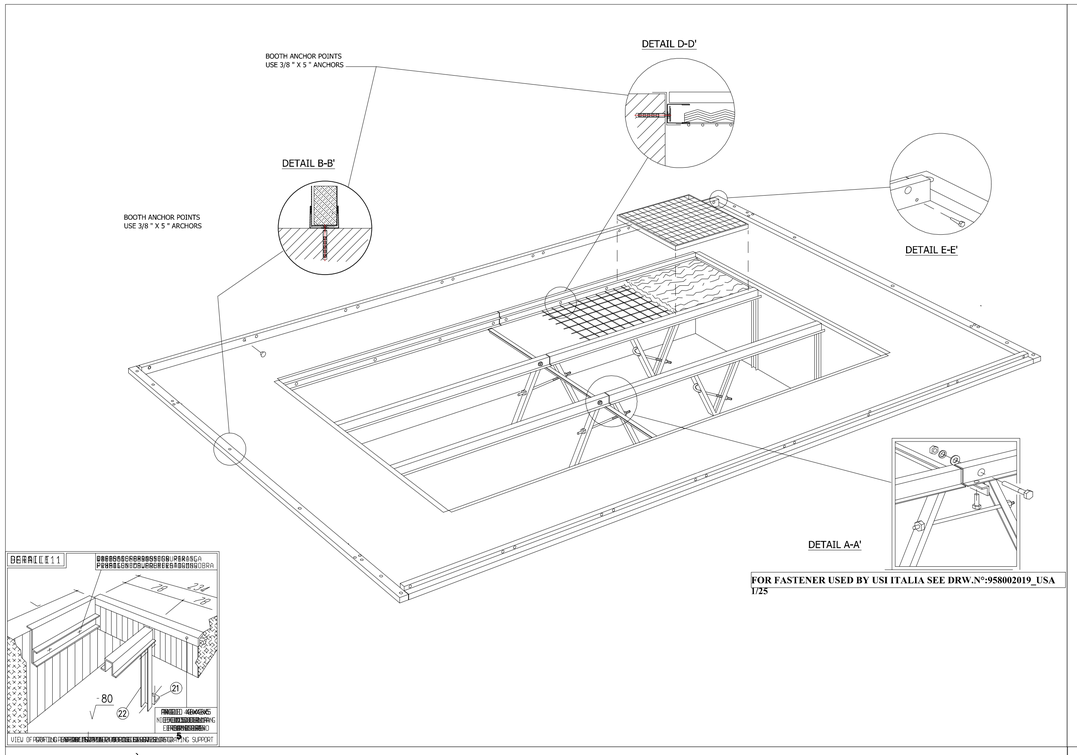

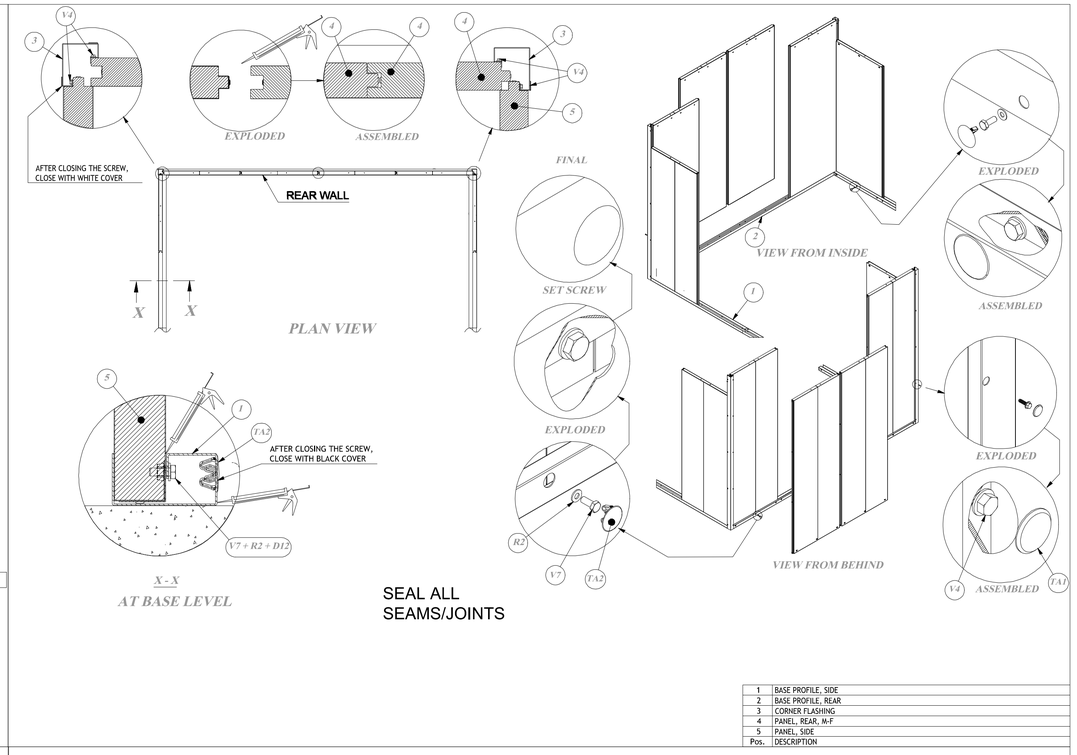

Pos.	DESCRIPTION
1	BASE PROFILE, SIDE
2	BASE PROFILE, REAR
3	CORNER FLASHING
4	PANEL, REAR, M-F
5	PANEL, SIDE

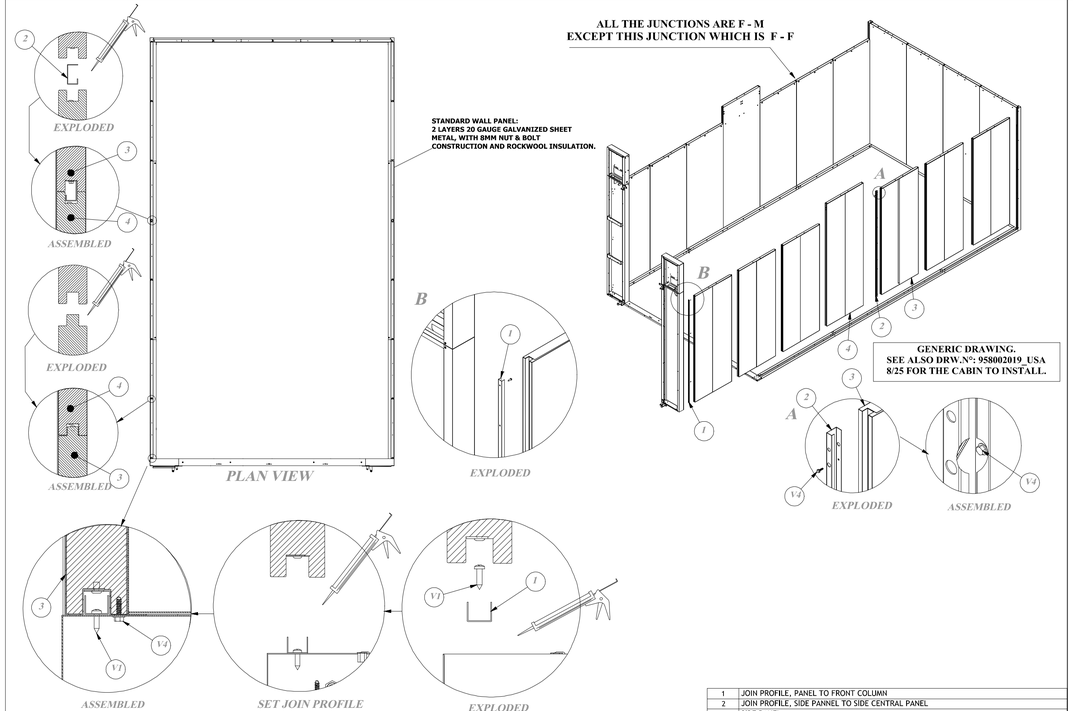

Pos.	DESCRIPTION
1	JOIN PROFILE, PANEL TO FRONT COLUMN
2	JOIN PROFILE, SIDE PANNEL TO SIDE CENTRAL PANEL
3	SIDE PANEL
4	SIDE, CENTRAL PANEL

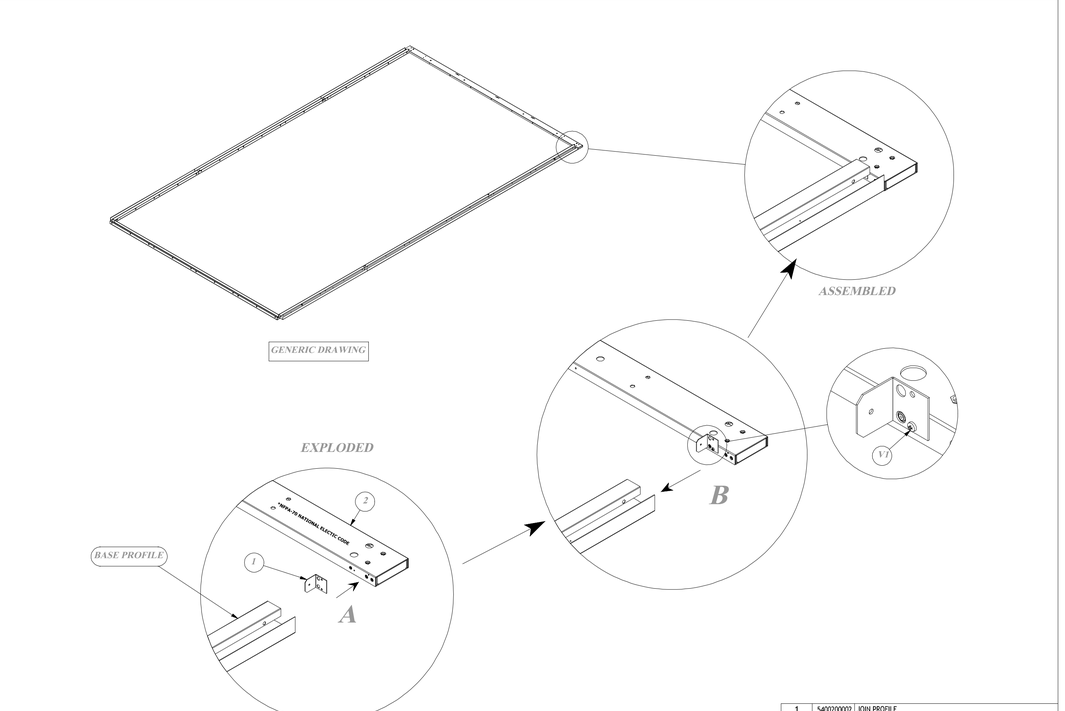

Pos.	CODE	DESCRIPTION
1	5400200002	JOIN PROFILE
2	541100357	FRONTAL BASE PROFILE

The installation has been designed based on precise customer's requests, and it is his exclusive responsibility to have a local professional engineer check, at his expense, that the installation complies with local codes in force and to get all necessary permits from the competent authorities. Exclusively at the customer's care and expense are: having a local professional engineer make the calculations pertaining to and deriving from the foundation works; the supply and installation of any profiles to fit into the foundations, hook-ups to the existing structure for supporting and/or fixing materials supplied by USI ITALIA, and getting all necessary permits from the competent authorities.

ALL EQUIPMENT IS DESIGNED EXPRESSLY FOR THE REMOVAL OF PARTICULATE MATTER ONLY. REDUCTION OF "VOLATILE ORGANIC COMPOUNDS" REQUIRES EITHER COATING REFORMULATION OR OPTIONAL, ADDITIONAL EQUIPMENT.

Intertek

SHOP DIMENSIONS BASED ON BEST AVAILABLE INFORMATION RECEIVED
***DISTRIBUTORS RESPONSABILITY:**
-VERIFY EQUIPMENT MODEL NUMBERS IN DRAWING WITH EQUIPAMENT ON ORDER.
-FINAL LOCATION OF EQUIPAMENT.
-FIELD VERIFY ALL DIMENSIONS.
-VERIFY COMPLIANCE WITH ALL NATIONAL AND LOCAL CODES WITHIN JURISDICTION OF INSTALLATION SITE.
SPECIFICATIONS FOR PERMIT APPLICATION

Copyright © 2023 USI ITALIA
This drawing is not to be reproduced, either in whole or in part without the permissions of Usi Italia.

USI north america
PHONE +1 201-405-7760
565 Commerce St, Franklin Lakes, NJ 07417, United States

BY	CHECKED
DMD	DRK

ISSUE	DATE
R0	2023.12.05

PROJECT NAME
TESLA ENGLEWOOD

ENGINEER
RENO JAMES ENGINEERING
303.800.5105
3760 VANCE ST STE 301
WHEAT RIDGE, CO 80033

STAMP
COLORADO LICENSED PROFESSIONAL ENGINEER
DANIEL RENO BERNING
40380
2023.12.08

SHEET DESCRIPTION
GENERIC PAINT BOOTH ASSEMBLY DETAILS

SHEET NUMBER
M-4.1

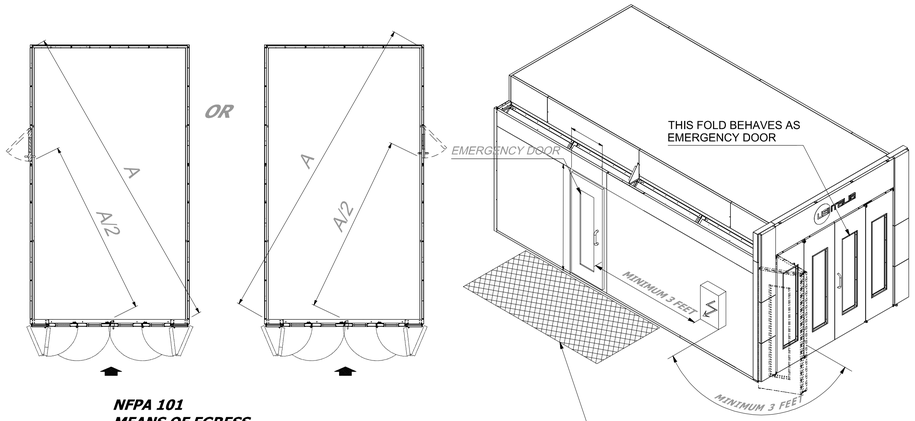

NFPA 101
MEANS OF EGRESS
The minimum number of means of egress is two.
The minimum distance beween them is half of
the spraybooth diagonal.

The emergency door should take to an area
of the bodyshop. If it takes to another room
then the room should be protected by an
automatic sprinkler system.

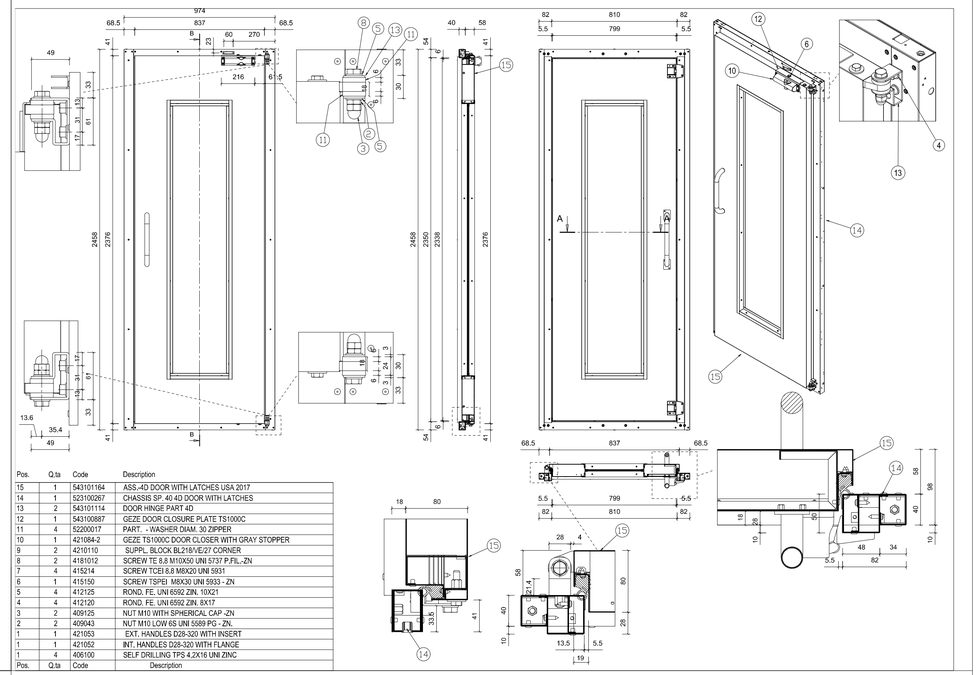

Pos.	Q.ta	Code	Description
15	1	543101164	ASS.-4D DOOR WITH LATCHES USA 2017
14	1	523100267	CHASSIS SP. 40 4D DOOR WITH LATCHES
13	2	543101114	DOOR HINGE PART 4D
12	1	543100887	GEZE DOOR CLOSURE PLATE TS1000C
11	4	52200017	PART. - WASHER DIAM. 30 ZIPPER
10	1	421084-2	GEZE TS1000C DOOR CLOSER WITH GRAY STOPPER
9	2	4210110	SUPPL. BLOCK BL218/VE/27 CORNER
8	2	4181012	SCREW TE 8.8 M10X50 UNI 5737 P.FIL.-ZN
7	4	4115214	SCREW TCEI 8.8 M8X20 UNI 5931
6	1	4115150	SCREW TSPEI M8X30 UNI 5933 - ZN
5	4	4112125	ROND. FE. UNI 6592 ZIN. 10X21
4	4	4112120	ROND. FE. UNI 6592 ZIN. 8X17
3	2	409125	NUT M10 WITH SPHERICAL CAP -ZN
2	2	409043	NUT M10 LOW 6S UNI 5589 PG - ZN.
1	1	421053	EXT. HANDLES D28-320 WITH INSERT
1	1	421052	INT. HANDLES D28-320 WITH FLANGE
1	4	406100	SELF DRILLING TPS 4.2X16 UNI ZINC
Pos.	Q.ta	Code	Description

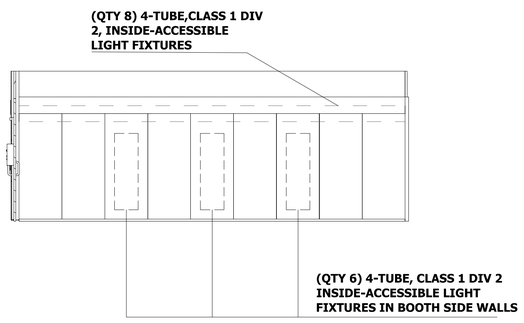

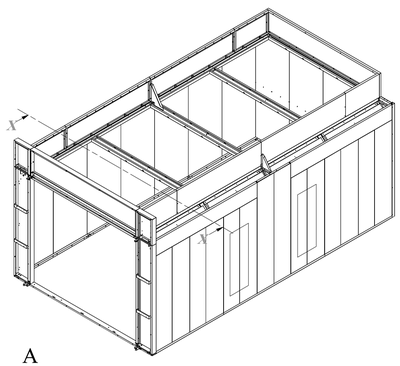

GENERIC DRAWING.
THIS IS A GENERIC DRAWING SEE ALSO SPECIFIC DRAWINGS ON PLENUM IN FOLLOWING PAGES.

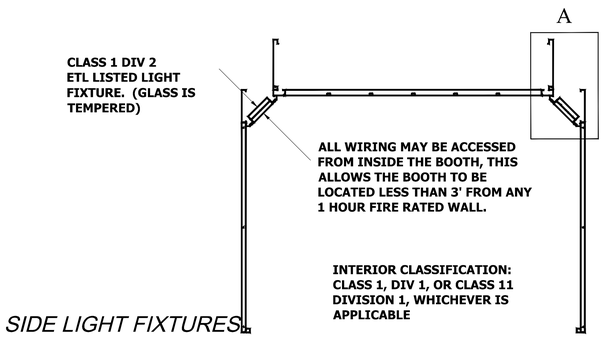

SIDE LIGHT FIXTURES

DETAIL A-A'

ALL WIRING SHALL BE ACCESSED FROM INSIDE THE BOOTH, THIS ALLOWS THE BOOTH TO BE LOCATED LESS THAN 3'FROM ANY 1 HOUR FIRE RATED WALL.

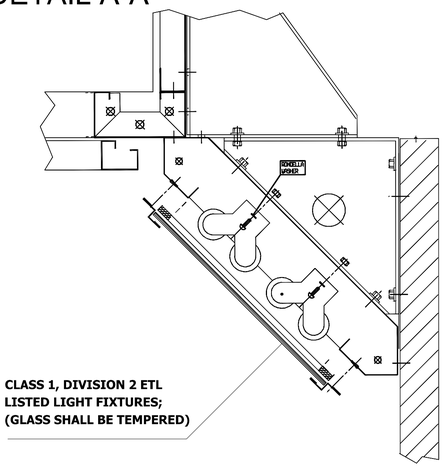

CLASS 1, DIVISION 2 ETL LISTED LIGHT FIXTURES; (GLASS SHALL BE TEMPERED)

The installation has been designed based on precise customer's requests, and it is his exclusive responsibility to have a local professional engineer check, at his expense, that the installation complies with local codes in force and to get all necessary permits from the competent authorities. Exclusively at the customer's care and expense are: having a local professional engineer make the calculations pertaining to and deriving from the foundation works; the supply and installation of any profiles to fit into the foundations, hook-ups to the existing structure for supporting and/or fixing materials supplied by USI ITALIA, and getting all necessary permits from the competent authorities.

SHOP DIMENSIONS BASED ON BEST AVAILABLE INFORMATION RECEIVED
***DOOR DIMENSIONS RESPONSIBILITY:**
-VERIFY EQUIPMENT MODEL NUMBERS IN DRAWING WITH EQUIPMENT ON ORDER.
-FINAL LOCATION OF EQUIPMENT.
-VERIFY ALL DIMENSIONS.
-VERIFY COMPLIANCE WITH ALL NATIONAL AND LOCAL CODES WITHIN JURISDICTION OF INSTALLATION SITE.
SPECIFICATIONS FOR PERMIT APPLICATION

ALL EQUIPMENT IS DESIGNED EXPRESSLY FOR THE REMOVAL OF PARTICULATE MATTER ONLY. REDUCTION OF "VOLATILE ORGANIC COMPOUNDS" REQUIRES EITHER COATING REMOVAL AND/OR REGENERATIVE OPTIONAL, ADDITIONAL EQUIPMENT.

Intertek

Copyright © 2023
USI ITALIA
This drawing is not to be reproduced, either in whole or in part, without the permissions of USI ITALIA.

PHONE +1 201-405-7760
565 Commerce St, Franklin Lakes, NJ 07417, United States

BY	CHECKED
DMD	DRK

ISSUE	DATE
R0	2023.12.05

PROJECT NAME
TESLA ENGLEWOOD

ENGINEER
RENO JAMES ENGINEERING
303.800.5105
3760 VANCE ST STE 301
WHEAT RIDGE, CO 80033

STAMP

COLORADO LICENSED
RENO JAMES
2023.12.08
40380
PROFESSIONAL ENGINEER

SHEET DESCRIPTION
PAINT BOOTH ELECTRICAL DETAILS

SHEET NUMBER
M-4.2

GAS FIRING PRESSURE DROP DATA

Contact your gas service company to ensure that adequate has service is available and review applicable installation codes for your area.

- Size the main gas line in accordance with Table 2. The figures shown are for straights lengths of pipe at 0.2” w.c. pressure drop, which is considered normal for low pressure systems. Note that fittings such as elbows and tees will add to the pipe pressure drop. For example drops and specific gravities other than 0.2" w.c. and 0.60“ w.c. appropriate correction factors need to be applied.

Table1

Gas Piping Pressure Drop Data									
EQUIVALENT LENGTH OF STRAIGHT PIPE IN FEET									
	20	30	40	50	60	80	100	150	200
Pipe Size in Inches	CFH NATURAL GAS WITH .2" PRESSURE DROP AND .60 S.G.								
1”	300	250	210	190	180	150	135	110	75
1-1/4"	520	425	360	325	300	260	230	190	165
1-1/2"	800	690	560	500	480	410	370	300	260
2”	1700	1400	1200	1100	1000	850	750	600	540
2-1/2”	3000	2500	2100	1900	1800	1550	1375	1100	950
EQUIVALENT LENGTH OF STRAIGHT PIPE IN FEET FOR LISTED FITTINGS									
Fitting Type	1”	1-1/4"	1-1/2"	2"	2-1/2"	Nominal Pipe Size In Inches			
Std. Tee	5.5"	7.5"	9.0"	12"	13.5"				
Std. Elbow	2.7"	3.7"	4.5"	5.5"	6.1"				

- Figure 1 is one of a variety of gas train configurations available through PCI. Figure 4 depicts a mod motor controlling the butterfly gas metering valve. The mod motor is available for full modulation or low-high-low operation. An on-off mode operation is also available.
- Mount leakage test and main gas cocks, main automatic gas valve and (where required) auxiliary valves (if not factory mounted) and connect gas valve wires through flexible conduit to control terminal strip in accordance with wiring instructions and all applicable codes.
- Install pressure regulator directly upstream of main automatic gas valve(s) and fit drip leg and main gas cock upstream of regulator or automatic valve(s).
- Burner gas regulator at the inlet is rated for maximum inlet pressure of 5psi.
- The gas pressure after burner main regulator with burner operating at a maximum input rate when firing the DF1500 HMA-2A Spray Booth System with the above gas train will be a minimum of 7 inches w.c. and a maximum of 14 inches w.c.

  Contact your local gas service company to ensure that adequate gas service is available

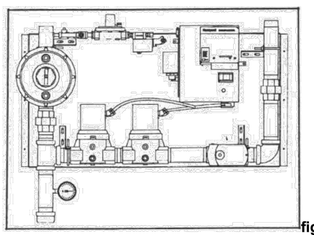

figure 1

- Install vent lines from main gas regulator (if used) and (if applicable) diaphragm gas valve. Vent line should be run to the outside of the building, terminating clear of windows or freshair intakes. Outside terminal of vent should have a screen to prevent insects from building nests in vent pipe. The vent should terminate in a manner which will preclude the possibility of water, dirt or other matter form entering the line.

	HEATING/VENTILATING UNIT RAC150TU-DF450KWT-ES	Ref. 99020504_ING Rev. 2 dt. 22.03.2016 Page 1

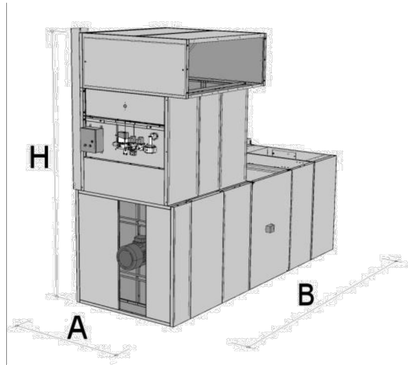

MAIN DIMENSIONS

A	4’ 1”
B	11’ 7”
H	11’ 2”

Heating/ventilating unit: galvanized steel frame and panels. Glass fiber insulation, thck.2 3/8”. Turbofan directly coupled to motors and air intake impeller with anti-sparking ring

Air exhaust unit: galvanized, built into the heating/ventilating unit, with turbofan directly coupled to motor and air intake impeller with anti-sparking ring.

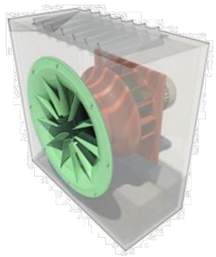

Variable speed controllers to vary the fan capacity according at the various work phases programmed on the control unit; they optimise motor performance and allow fuel and electric energy savings.

Motorized "PAINT-DRYING/CURING” cycle changeover damper.

Multi-pocket prefilter on inlet air made in polyester resined fiber, self-extinguishing class F1 up to DIN 53438, filtering class EU4 – G4

TECHNICAL DATA:

Average filtering efficiency	90 %
Maximum holding capacity	0.237lb/sqft=500 g/m^2
Initial pressure drop	0.005 p.s.i.=33 Pa
Final pressure drop	0.036p.s.i.=250 Pa
Filtering area	474sqft=4,4 m^2

Multi-pocket filter on exhaust air made as above but with reinforcement net.

Modulating direct fire burner: MIDCO burner, model DF 1500 HMA-2A with **stainless steel** combustion head, pre-wired gas train, with modulating valve (0 – 10 Volts) for

Property of USI ITALIA S.R.L.
Unauthorized reproduction, even partial, is forbidden.

Emessa da: Ufficio Tecnico Data: 11/02/2019 Firma: Caslli Shaban	Approvata da: Ufficio Tecnico Data: 11/02/2019 Firma: Caslli Shaban

The installation has been designed based on precise customer's requests, and it is his exclusive responsibility to have a local professional engineer check, at his expense, that the installation complies with local codes in force and to get all necessary permits from the competent authorities. Exclusively at the customer's care and expense are: having a local professional engineer make the calculations pertaining to and deriving from the foundation works; the supply and installation of any profiles to fit into the foundations, hook-ups to the existing structure for supporting and/or fixing materials supplied by USI ITALIA, and getting all necessary permits from the competent authorities.

ALL EQUIPMENT IS DESIGNED EXPRESSLY FOR THE REMOVAL OF PARTICULATE MATTER ONLY. REDUCTION OF "VOLATILE ORGANIC COMPOUNDS" REQUIRES EITHER COATING REMOVAL AND/OR OPTIONAL, ADDITIONAL EQUIPMENT.

Intertek

SHOP DIMENSIONS BASED ON BEST AVAILABLE INFORMATION RECEIVED
*ACCEPTANCE IS SUBJECT TO:
-VERIFY EQUIPMENT MODEL NUMBERS IN DRAWING WITH EQUIPMENT ON ORDER.
-FINAL LOCATION OF EQUIPMENT.
-VERIFY FINAL DIMENSIONS.
-VERIFY COMPLIANCE WITH ALL NATIONAL AND LOCAL CODES WITHIN JURISDICTION OF INSTALLATION SITE.
SPECIFICATIONS FOR PERMIT APPLICATION

Copyright © 2023 USI ITALIA
This drawing is not to be reproduced, either in whole or in part, without the permissions of USI ITALIA.

usi america
PHONE +1 201-405-7760
565 Commerce St, Franklin Lakes, NJ 07417, United States

BY	CHECKED
DMD	DRK

ISSUE	DATE
R0	2023.12.05

PROJECT NAME
TESLA ENGLEWOOD

ENGINEER
RENO JAMES ENGINEERING
303.800.5105
3760 VANCE ST STE 301
WHEAT RIDGE, CO 80033

STAMP

COLORADO LICENSED PROFESSIONAL ENGINEER RENO JAMES 2023.12.08 40380

SHEET DESCRIPTION
GAS SPECIFICATIONS AND FAN DETAIL

SHEET NUMBER
M-4.3

temperature control, control box containing flame safeguard controls; pressure air-switches for controlling process air flow.

Working characteristics:

Paint cycle	**total air exhaust**
Drying/curing cycle	**partial air re-circulation**
Fan max. air volume capacity	20,500 c.f.m. with total pressure 1.32" w.c. (330Pa)
Air volume	16,500 c.f.m. with total pressure 2.97" w.c. (740Pa)
Motors	15+15HP (11+11kW) asynchronous 3 ph,4 poles, 208/480 Volts, 60HZ, IP54, class F tropicalized
Paint cycle temperature, natural gas	107 °F (42°C) with outside temperature 12°F (-11°C)
Paint cycle temperature, propane gas	91 °F (33°C) with outside temperature 12°F (-11°C)
Drying/curing cycle temperature	176 °F (80°C) with outside temperature -2°F (-19°C)

Modulating burner DF 1500 HMA-2A:

Useful heating capacity, natural gas	**1,693,000 Btu**
Useful heating capacity, propane gas	**1,408,000 Btu**
Minimum heating capacity	**48,000 Btu**
Power supply	**single-phase, 120 Volts, 60 HZ, 2A**
Fuel	**natural gas / propane gas**

Burner main regulator is rated for Maximum pressure of 5psi:

Natural gas pressure after main regulator 8" w.c.
Propane gas pressure after main regulator 2,2" w.c.
Connection to inlet to ramp **1 1/2"**

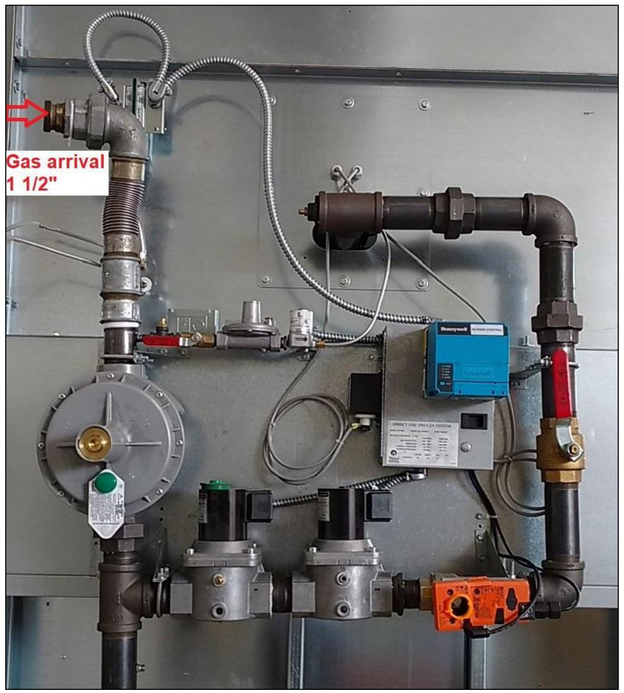

Modulating Burner model: Power Flame JR30A-12

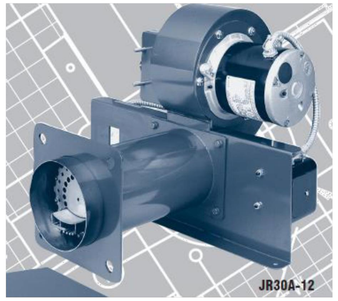

Useful heating capacity, natural gas	**1,260,000 BTU**
Minimum heating capacity	**250,000 BTU**
Power supply	**single-phase**, **115 Volts, 60 HZ, 12A**
Fuel	**natural gas / propane gas**
Gas pressure	**min.4,9-max 14" w.c.**

Working characteristics of the spraybooth:

Paint cycle	**total air exhaust**
Drying/curing cycle	**partial air re-circulation**
Fan max. air volume capacity	**20,500** cfm with total pressure **1.06" w.c**. (270 Pa)
Air volume	**16,500** cfm with total pressure **3.74" w.c**. (950 Pa)
Motors	**15+15HP** (11+11kW) asynchronous 3 ph,4 poles, 208/480 Volts, 60HZ, IP54, class F tropicalized
Paint cycle temperature, natural gas	**80 °F** (26°C) with outside temperature **32°F** (0°C)
Drying/curing cycle temperature	**176 °F** (80°C)

Noise level:
- inside spraybooth 75 +/- 2 dBA
-10ft (3m) from the discharge ducts 80 +/- 3 dBA.

Notice: The equipment must be installed in weatherproof premises. Minimum/maximum intake air temperature **32°F/104°F.** Maximum relative humidity **90%.**
The electric power supply must not vary more than **+/- 5%** from the value indicated.

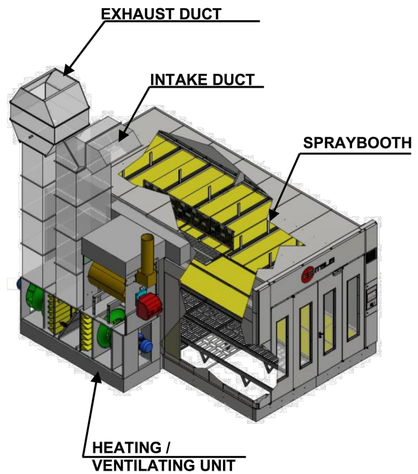

N.B. : The data contained in the present technical specifications refer to our present production.
We reserve the right to modify and/or substitute all or part of them at any time without prior notice.

The installation has been designed based on precise customer's requests, and it is his exclusive responsibility to have a local professional engineer check, at his expense, that the installation complies with local codes in force and to get all necessary permits from the competent authorities. Exclusively at the customer's care and expense are: having a local professional engineer make the calculations pertaining to and deriving from the foundation works; the supply and installation of any profiles to fit into the foundations, hook-ups to the existing structure for supporting and/or fixing materials supplied by USI ITALIA, and getting all necessary permits from the competent authorities.

USI ITALIA

ALL EQUIPMENT IS DESIGNED EXPRESSLY FOR THE REMOVAL OF PARTICULATE MATTER ONLY. REDUCTION OF "VOLATILE ORGANIC COMPOUNDS" REQUIRES EITHER COATING REMOVAL AND/OR REGENERATIVE OPTIONAL, ADDITIONAL EQUIPMENT.

Intertek

SHOP DIMENSIONS BASED ON BEST AVAILABLE INFORMATION RECEIVED
****DEPENDING ON EQUIPMENT AVAILABILITY:**
-VERIFY EQUIPMENT MODEL NUMBERS IN DRAWING WITH EQUIPMENT ON ORDER.
-FINAL LOCATION OF EQUIPMENT.
-VERIFY ALL DIMENSIONS.
-VERIFY COMPLIANCE WITH ALL NATIONAL AND LOCAL CODES WITHIN JURISDICTION OF INSTALLATION SITE.
SPECIFICATIONS FOR PERMIT APPLICATION

Copyright © 2023 USI ITALIA
This drawing is not to be reproduced, either in whole or in part, without the permissions of USI ITALIA.

usi north america
PHONE +1 201-405-7760
565 Commerce St, Franklin Lakes, NJ 07417, United States

BY	CHECKED
DMD	DRK
ISSUE	DATE
R0	2023.12.05

PROJECT NAME
TESLA ENGLEWOOD

ENGINEER
RENO JAMES ENGINEERING
303.800.5105
3760 VANCE ST STE 301
WHEAT RIDGE, CO 80033

STAMP
COLORADO LICENSED
RENO JAMES
2023.12.05
40380
PROFESSIONAL ENGINEER

SHEET DESCRIPTION
BURNER DETAIL

SHEET NUMBER
M-4.4

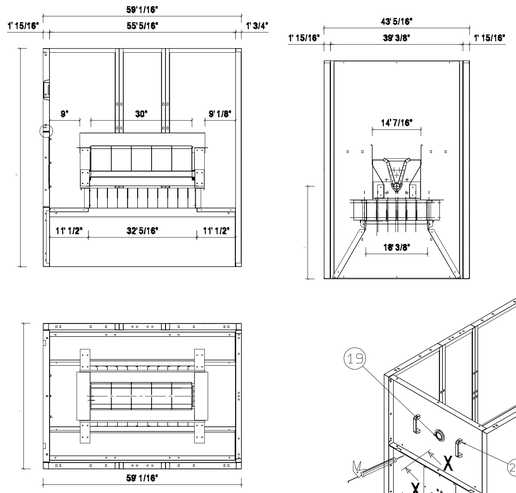

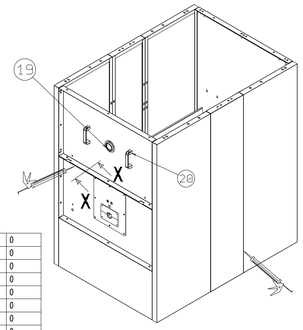

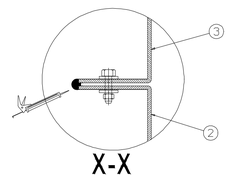

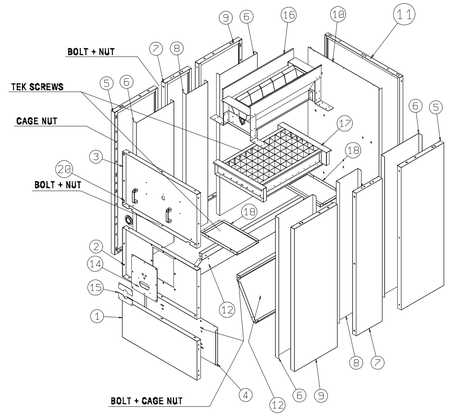

Pos.	Q.tà	Code	Description	Weight	Rev.
20	2	421055	HANDLES MF/132 BLACK HOLE D.8mm	0.04	0
19	1	567100106	SPHOLE CAMARA COMB.220KW	0	0
18	2	566100128	DEFLECT. HORIZ. F / D	1.579	0
17	1	566100129	HONEYCOMB 456 X 800 - MIDCO DF 1500	25.088	0
16	1	564100031	MIDCO DF 1500 STOVE	0	0
15	2	564100032	MIDCO FINISHING PLATE DF 1500 1'1 / 2 "	0.216	0
14	1	564100030	MIDCO PLATE DF 1500	2.54	0
13	1	415711	STEEL RIVET D.3,8 X 9	0.01	0
12	2	564100033	DEFLECTOR RAC 100/150 MIDCO USA	5.518	0
11	1	56600512	PANEL POST. GEN. F/D	15.894	2
10	1	566100095	TAMPONAM. PANN. POST. F/D	10.561	1
9	2	56600510	PANELS LATER.DX GROUP GEN.	10.279	2
8	2	56600523	TAMPONAM. SIDE PANELS	3.867	1
7	2	56600522	BODY PANEL GEN. FOR CAMARA COMB.	7.077	1
6	4	56600511	TAMPONAM. SIDE PANELS	6.049	0
5	2	56600509	PANEL LATERAL LEFT GROUP GEN.	10.279	2
4	1	56600516	TAMPONAM. PANN. FRONT ABOVE CASE	3.451	1
3	1	56600521	FRONT PLATE SUP. F / D	15.113	2
2	1	566100148	PLATE FR. F/D USA BURNER CONNECTION	12.028	2
1	1	56600515	PANN. FRONT. OVER CASE VENT.	5.137	0

PANEL 3 IS AN INSPECTION PANEL. DO NOT APPLY SEALANT BETWEEN THE FACES OF IT. AFTER INSTALLATION APPLY A BEAD OF SEALANT OUTSIDE THE WHOLE PERIMETER. SEE DETAIL X-X

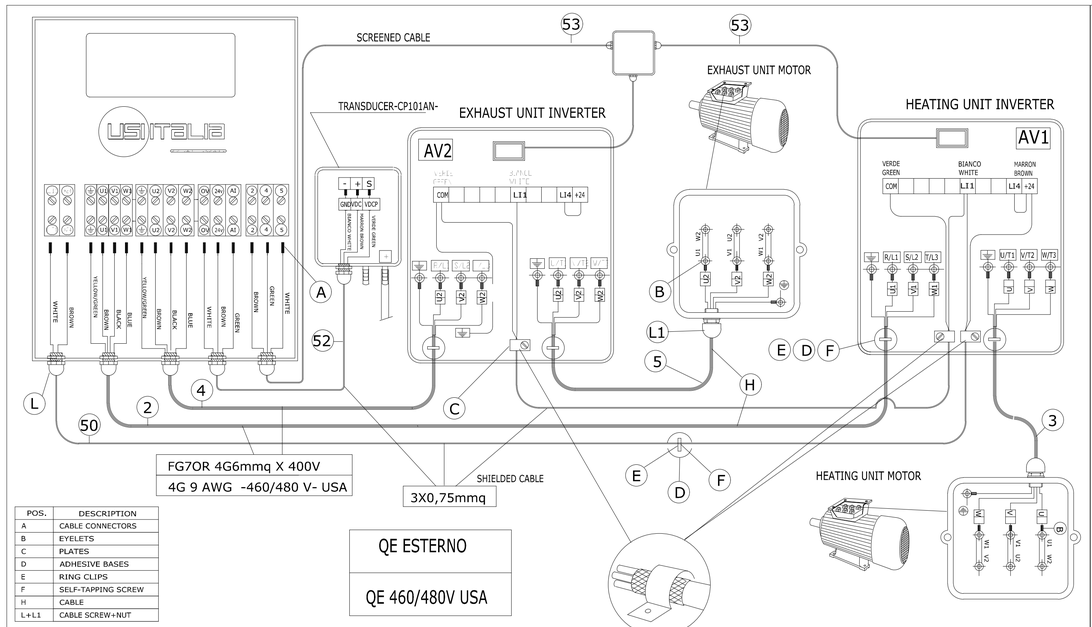

POS.	DESCRIPTION
A	CABLE CONNECTORS
B	EYELETS
C	PLATES
D	ADHESIVE BASES
E	RING CLIPS
F	SELF-TAPPING SCREW
H	CABLE
L+L1	CABLE SCREW+NUT

50	SHIELDED CABLE BETWEEN CONTROL PANEL AND INTAKE VFD
50	SHIELDED CABLE BETWEEN INTAKE VFD AND EXHAUST VFD
53	SHIELDED CABLE BETWEEN CONTROL PANEL AND INTAKE AND EXHAUST VFD
2	POWER SUPPLY BETWEEN CONTROL PANEL AND INTAKE VFD
4	POWER SUPPLY BETWEEN CONTROL PANEL AND EXHAUST VFD
3	WIRES CONNECTING INTAKE VFD WITH INTAKE MOTOR
5	WIRES CONNECTING EXHAUST VFD WITH EXHAUST MOTOR

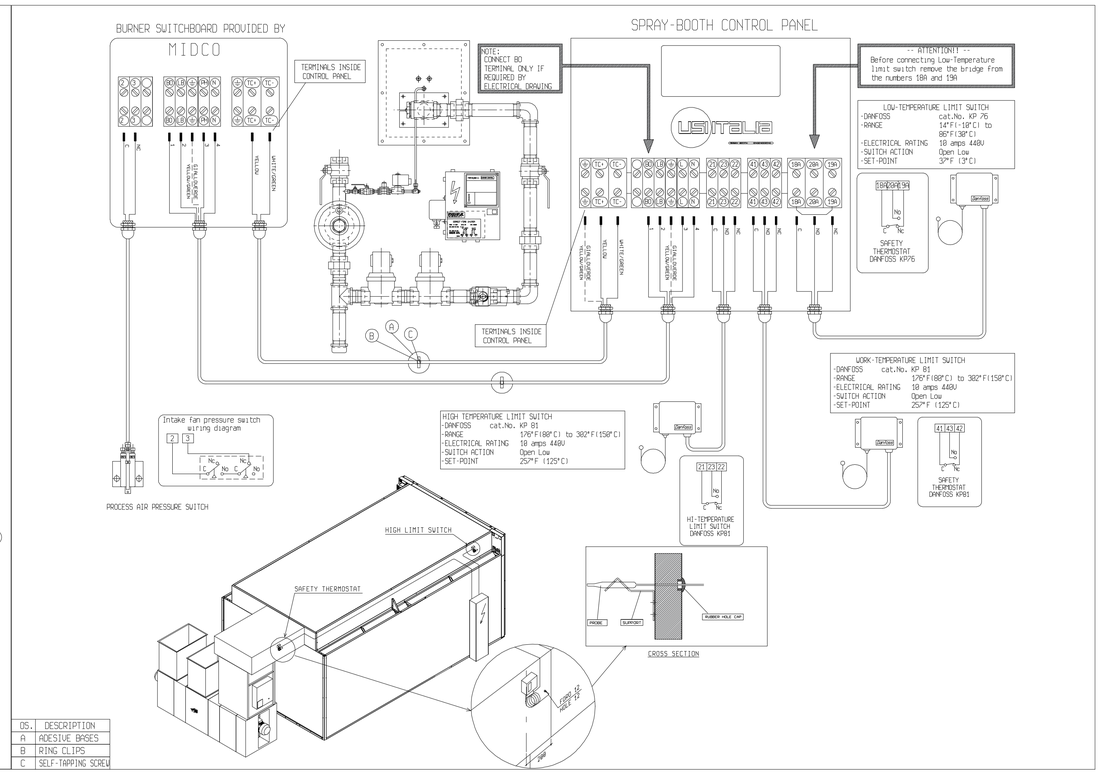

OS.	DESCRIPTION
A	ADESIVE BASES
B	RING CLIPS
C	SELF-TAPPING SCREW

The installation has been designed based on precise customer's requests, and it is his exclusive responsibility to have a local professional engineer check, at his expense, that the installation complies with local codes in force and to get all necessary permits from the competent authorities. Exclusively at the customer's care and expense are: having a local professional engineer make the calculations pertaining to and deriving from the foundation works; the supply and installation of any profiles to fit into the foundations, hook-ups to the existing structure for supporting and/or fixing materials supplied by USI ITALIA, and getting all necessary permits from the competent authorities.

SHOP DIMENSIONS BASED ON BEST AVAILABLE INFORMATION RECEIVED
***DUCTWORK DIMENSIONS AVAILABILITY:**
VERIFY EQUIPMENT MODEL NUMBERS IN DRAWING WITH EQUIPMENT ON ORDER.
-FINAL LOCATION OF EQUIPMENT.
-FEASIBILITY OF DUCTWORK.
-VERIFY COMPLIANCE WITH ALL NATIONAL AND LOCAL CODES WITHIN JURISDICTION OF INSTALLATION SITE.
SPECIFICATIONS FOR PERMIT APPLICATION

ALL EQUIPMENT IS DESIGNED EXPRESSLY FOR THE REMOVAL OF PARTICULATE MATTER ONLY. REDUCTION OF "VOLATILE ORGANIC COMPOUNDS" REQUIRES EITHER COATING REMOVAL AND/OR ADDITIONAL OPTIONAL, ADDITIONAL EQUIPMENT.

Intertek

Copyright © 2023 USI ITALIA
This drawing is not to be reproduced, either in whole or in part, without the permissions of USI ITALIA.

PHONE +1 201-405-7760
565 Commerce St, Franklin Lakes, NJ 07417, United States

BY	CHECKED
DMD	DRK

ISSUE	DATE
R0	2023.12.05

PROJECT NAME
TESLA ENGLEWOOD

ENGINEER
RENO JAMES ENGINEERING
303.800.5105
3760 VANCE ST STE 301
WHEAT RIDGE, CO 80033

STAMP
COLORADO LICENSED
RENO JAMES DRAKE
2023.12.18
40380
PROFESSIONAL ENGINEER

SHEET DESCRIPTION
CONTROL SYSTEM DETAIL

SHEET NUMBER
M-4.5

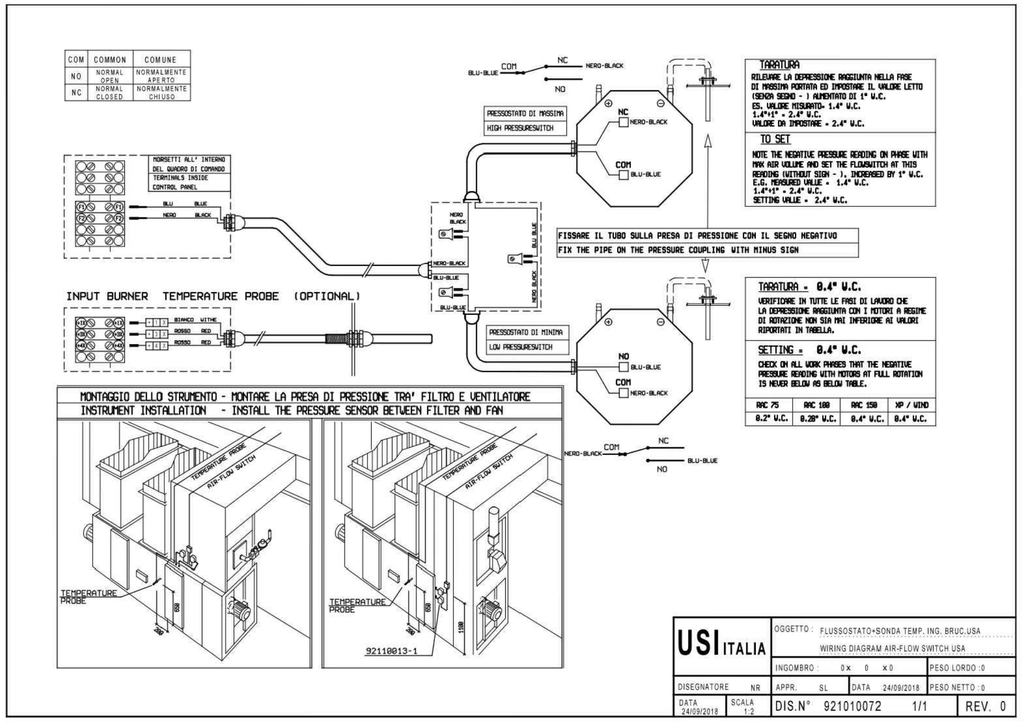

TARATURA

RILEVARE LA DEPRESSIONE RAGGIUNTA NELLA FASE DI MASSIMA PORTATA ED IMPOSTARE IL VALORE LETTO (SENZA SEGNO -) AUMENTATO DI 1" W.C.
ES. VALORE MISURATO- 1.4" W.C.
1.4"+1" = 2.4" W.C.
VALORE DA IMPOSTARE = 2.4" W.C.

TO SET

NOTE THE NEGATIVE PRESSURE READING ON PARE WITH MAX AIR VOLUME AND SET THE FLOWSWITCH AT THIS READING (WITHOUT SIGN -), INCREASED BY 1" W.C.
E.G. MEASURED VALUE = 1.4" W.C.
1.4"+1" = 2.4" W.C.
SETTING VALUE = 2.4" W.C.

FISSARE IL TUBO SULLA PRESA DI PRESSIONE CON IL SEGNO NEGATIVO
FIX THE PIPE ON THE PRESSURE COUPLING WITH MINUS SIGN

TARATURA = 0.4" W.C.

VERIFICARE IN TUTTE LE FASI DI LAVORO CHE LA DEPRESSIONE RAGGIUNTA CON I MOTORI A REGIME DI ROTAZIONE NON SIA MAI INFERIORE AI VALORI RIPORTATI IN TABELLA.

SETTING = 0.4" W.C.

CHECK ON ALL WORK PHASES THAT THE NEGATIVE PRESSURE READING WITH MOTORS AT FULL ROTATION IS NEVER BELOW AS BELOW TABLE.

RAC 75	RAC 100	RAC 150	XP / WIND
0.2" W.C.	0.28" W.C.	0.4" W.C.	0.4" W.C.

USI ITALIA — OGGETTO: FLUSSOSTATO+SONDA TEMP. ING. BRUC.USA
WIRING DIAGRAM AIR-FLOW SWITCH USA
INGOMBRO: 0 x 0 x 0 | PESO LORDO: 0
DISEGNATORE NR | APPR. SL | DATA 24/09/2018 | PESO NETTO: 0
DATA 24/09/2018 | SCALA 1:2 | DIS.N° 921010072 | 1/1 | REV. 0

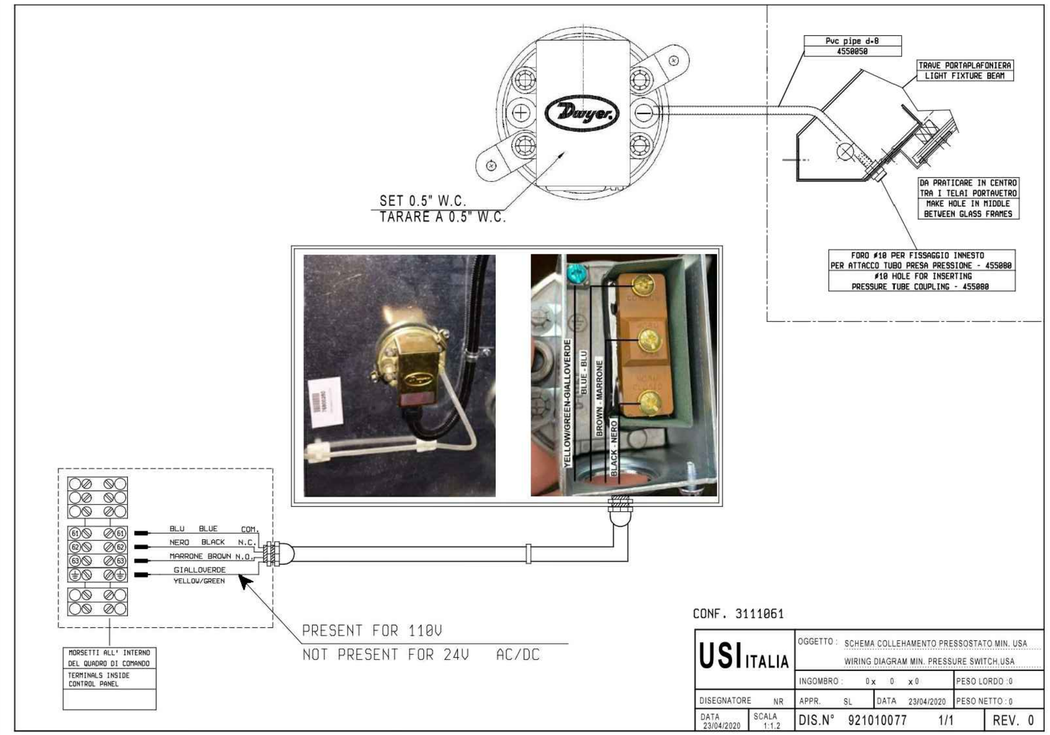

USI ITALIA — OGGETTO: SCHEMA COLLEGAMENTO PRESSOSTATO MIN. USA
WIRING DIAGRAM MIN. PRESSURE SWITCH USA
INGOMBRO: 0 x 0 x 0 | PESO LORDO: 0
DISEGNATORE NR | APPR. SL | DATA 23/04/2020 | PESO NETTO: 0
DATA 23/04/2020 | SCALA 1:1.2 | DIS.N° 921010077 | 1/1 | REV. 0

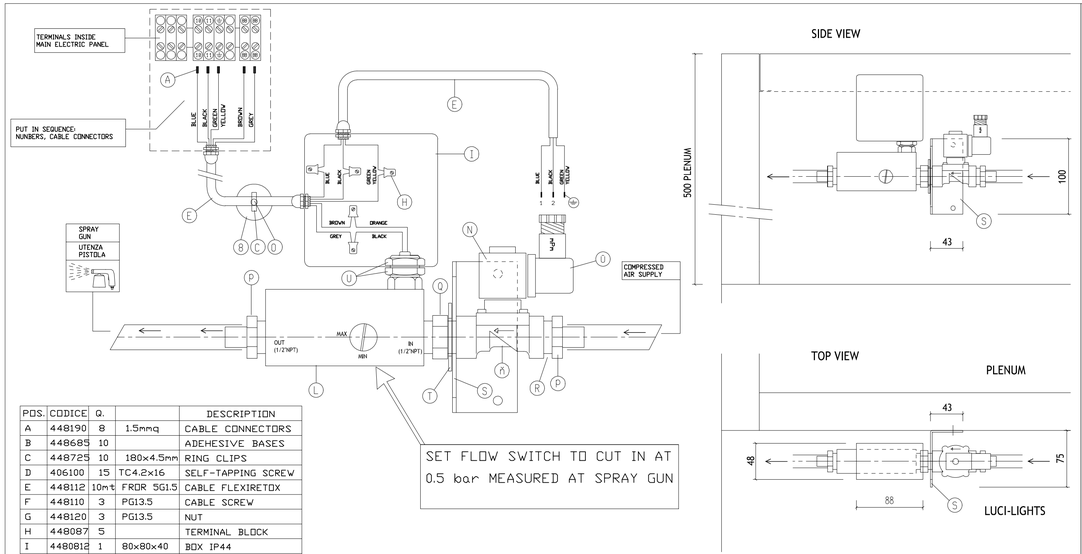

POS.	CODICE	Q.		DESCRIPTION
A	448190	8	1.5mq	CABLE CONNECTORS
B	448685	10		ADEHESIVE BASES
C	448725	10	180x4.5mm	RING CLIPS
D	406100	15	TC4.2x16	SELF-TAPPING SCREW
E	448112	10mt	FROR 5G1.5	CABLE FLEXIRETOX
F	448110	3	PG13.5	CABLE SCREW
G	448120	3	PG13.5	NUT
H	448087	5		TERMINAL BLOCK
I	448081	1	80x80x40	BOX IP44
L	448070	1	THOMAS PRODUCTS MOD. 1500	AIR COMPRESSED FLOW SWITCH
M	455085	1	2/2 G1/2''	COMPRESSED AIR
N	448227	1	24V 50/60HZ	SOLENOID VALVE SUWA
O	448228	1		
P	455550	2	1/2"-3/8"	ADAPTER
Q	403266	2	1/2"-1/2"	CONNECTOR
R	465615	1		TEFLON
S	542100001	1		METAL BRACKET
T	412155	2		WACHER 22x39
U	403269	2		NUT 1/2"

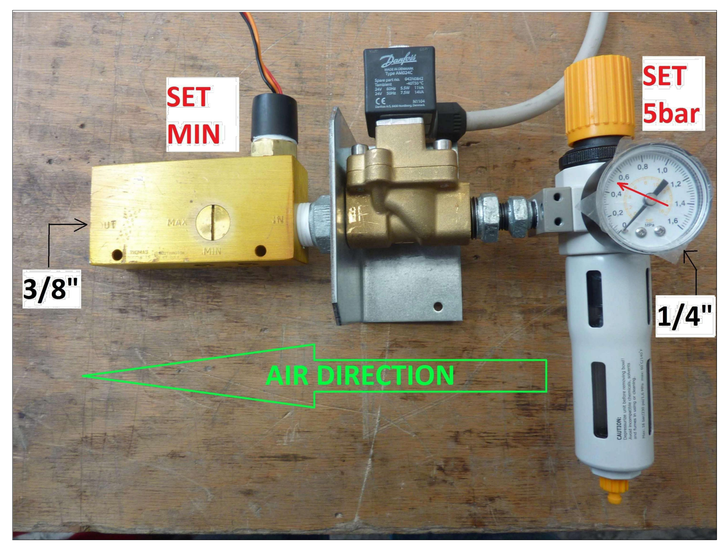

The installation has been designed based on precise customer's requests, and it is his exclusive responsibility to have a local professional engineer check, at his expense, that the installation complies with local codes in force and to get all necessary permits from the competent authorities. Exclusively at the customer's care and expense are: having a local professional engineer make the calculations pertaining to and deriving from the foundation works; the supply and installation of any profiles to fit into the foundations, hook-ups to the existing structure for supporting and/or fixing materials supplied by USI ITALIA, and getting all necessary permits from the competent authorities.

ALL EQUIPMENT IS DESIGNED EXPRESSLY FOR PARTICULATE MATTER ONLY. REDUCTION OF "VOLATILE ORGANIC COMPOUNDS" REQUIRES EITHER COATING REMOVAL AND/OR OPTIONAL, ADDITIONAL EQUIPMENT.

Intertek

SHOP DIMENSIONS BASED ON BEST AVAILABLE INFORMATION RECEIVED
***DOUBLE CHECK DIMENSIONS RESPONSIBILITY:**
-VERIFY EQUIPMENT MODEL NUMBERS IN DRAWING WITH EQUIPMENT ON ORDER.
-FINAL LOCATION OF EQUIPMENT.
-VERIFY ALL DIMENSIONS.
-VERIFY COMPLIANCE WITH ALL NATIONAL AND LOCAL CODES WITHIN JURISDICTION OF INSTALLATION SITE.
SPECIFICATIONS FOR PERMIT APPLICATION

Copyright © 2023 USI ITALIA
This drawing is not to be reproduced, either in whole or in part, without the permissions of USI ITALIA

usi north america
PHONE +1 201-405-7760
565 Commerce St, Franklin Lakes, NJ 07417, United States

BY	CHECKED
DMD	DRK

ISSUE	DATE
R0	2023.12.05

PROJECT NAME
TESLA ENGLEWOOD

ENGINEER
RENO JAMES ENGINEERING
303.800.5105
3760 VANCE ST STE 301
WHEAT RIDGE, CO 80033

STAMP
COLORADO LICENSED PROFESSIONAL ENGINEER RENO JAMES 40380 2023.12.08

SHEET DESCRIPTION
SAFETY DEVICES

SHEET NUMBER
M-4.6

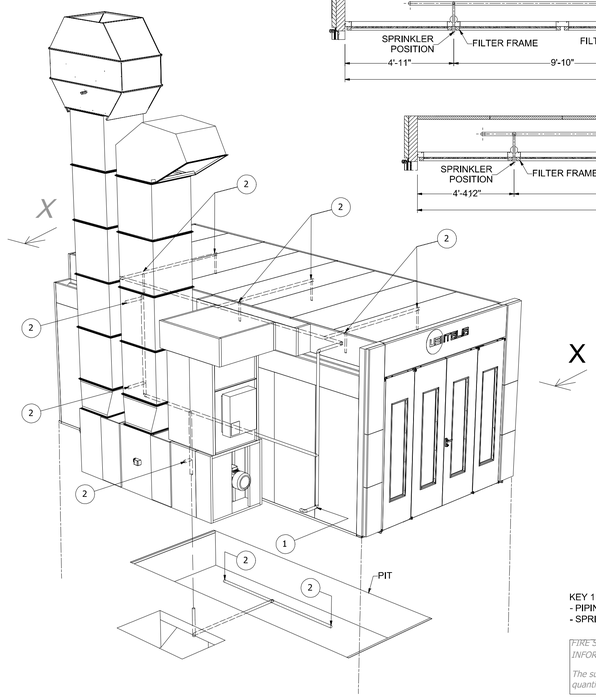

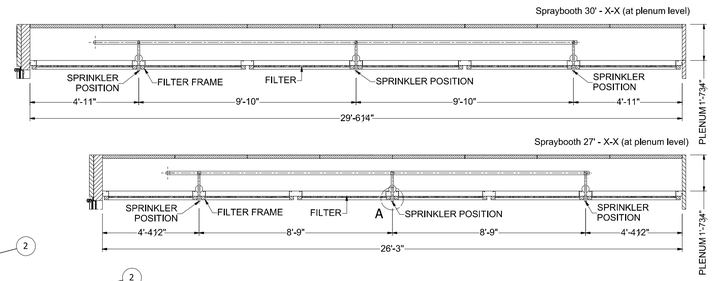

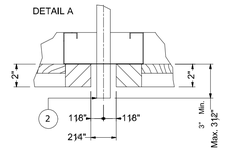

Note:
In case of water system then the following additional partes are required:
1 - Waterflow microswitch (normally closed) connected to control panel
2 - Antifreeze damper.

Duct Protection.
Sprinkler systems protecting stacks or ducts shall meet all of the following requirements specified in NFPA 33:

1 - One sprinkler shall be located at the top of each vertical riser and at the midpoint of each offset. Additional heads shall be spaced on 7.3 m (24 ft) centers if the rise is greater than 7.3 m (24 ft).

2 - Horizontal exhaust ducts shall have sprinklers located on 3.7 m (12 ft) centers beginning no more than 1.7 m (6 ft) from the duct entrance.

KEY 1
- PIPING FOR FIRE EXTINGUISHER 2
- SPRINKLER HEAD (Min. temperature 360° F)

FIRE SUPRESSION SYSTEM, INFORMATION PURPOSE.

The supply is not at USI Italia charge. The position and quantity of sprinklers depends on local code.

Disegnato da: Studio AS	Approvato da: FB	OGGETTO: FIRE SUPRESSION SYSTEM
Data:	Data:	DIS. N° 950210113 — REV. 00

Note: This drawing contains panarc information. The manufacturer reserves the right to make changes, at any time, and without prior notice.

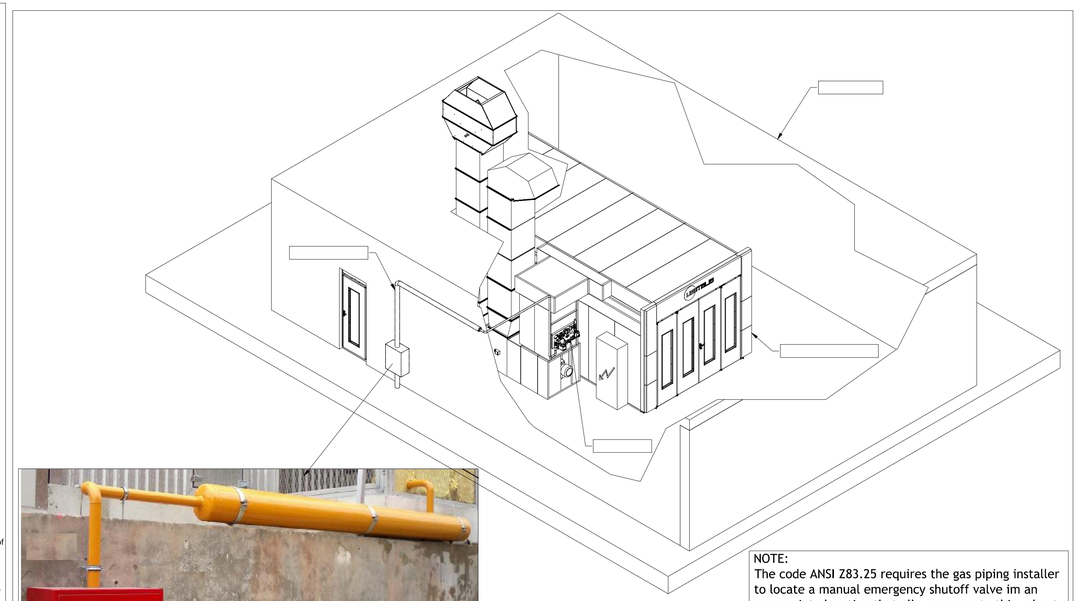

NOTE:
The code ANSI Z83.25 requires the gas piping installer to locate a manual emergency shutoff valve im an appropriate location that allows access to this valve to shut off the fuel to the process heater in case of a fire or explosion to the heater

USI ITALIA	OBJECT: PLENUM 90.45.--H=600 USA 2017		
	DIMENSIONS: 0x 0 x0		GROSS WEIGHT: 0
DESIGNER LB	APPR. SL	DATA	NET WEIGHT: 0
DATA SCALA	DIS.N° 958010322 2/2		REV. 0

EXPLOSION VENT OPENING AREA IN COMPLIANCE WITH NFPA 101

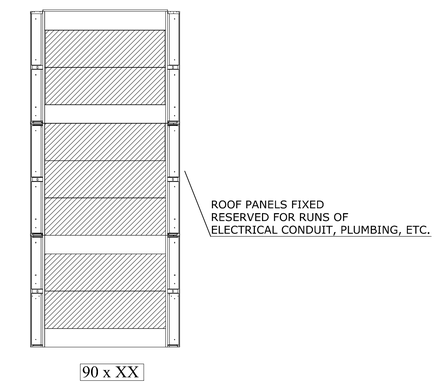

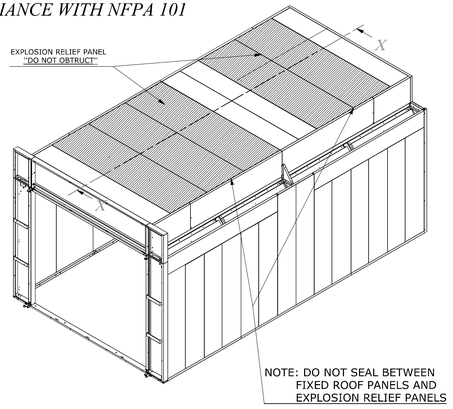

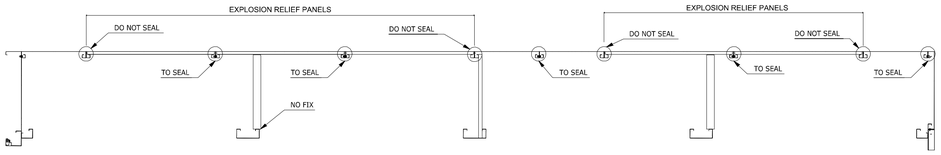

X-X

	OBJECT: INSTALLATION OF PLENUM		
DESIGNER NR	APPR. SC.	DATE	NET WEIGTH---
DATE SCALE	DRW.N°		REV. 00

DETAIL A

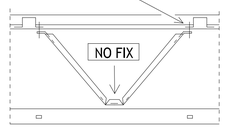

EXPLOSION VENT OPENIN AREA IN COMPLIANCE WITH NFPA 101

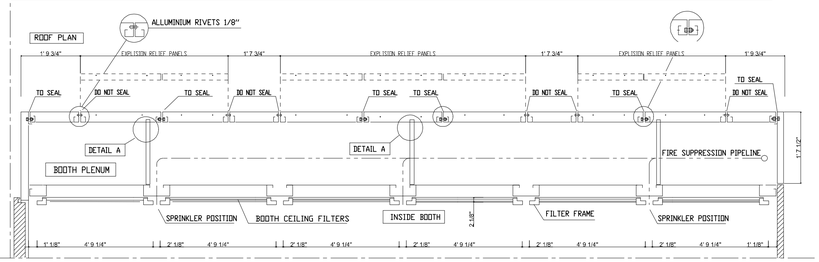

NOTE: FIRE SUPPRESION SYSTEM IS NOT INCLUDED WITH STANDARD BOOTH BUT IS REQUIRED BY N.F.P.A. BULLETIN N. 33

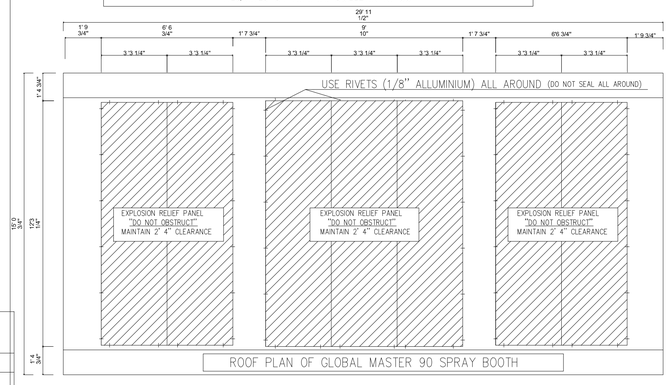

NOTE: DO NOT SEAL BETWEEN FIXED ROOF PANELS AND EXPLOSION RELIEF PANELS

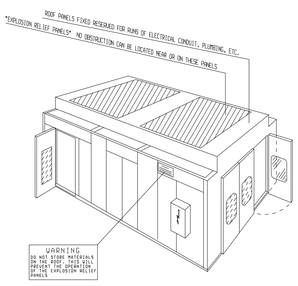

USI ITALIA	OBJECT: PLENUM 90.45.--H=600 USA 2017		
	DIMENSIONS: 0x 0 x0		GROSS WEIGHT: 0
DESIGNER LB	APPR. SL	DATA	NET WEIGHT: 0
DATA SCALA	DIS.N° 958010322 2/2		REV. 0

The installation has been designed based on precise customer's requests, and it is his exclusive responsibility to have a local professional engineer check, at his expense, that the installation complies with local codes in force and to get all necessary permits from the competent authorities. Exclusively at the customer's care and expense are: having a local professional engineer make the calculations pertaining to and deriving from the foundation works; the supply and installation of any profiles to fit into the foundations, hook-ups to the existing structure for supporting and/or fixing materials supplied by USI ITALIA, and getting all necessary permits from the competent authorities.

SHOP DIMENSIONS BASED ON BEST AVAILABLE INFORMATION RECEIVED
***DEPENDING ON EQUIPMENT AVAILABILITY:**
-VERIFY EQUIPMENT MODEL NUMBERS IN DRAWING WITH EQUIPMENT ON ORDER.
-FINAL LOCATION OF EQUIPMENT.
-VERIFY LOCAL CODES AND LAWS.
-VERIFY COMPLIANCE WITH ALL NATIONAL AND LOCAL CODES WITHIN JURISDICTION OF INSTALLATION SITE.
SPECIFICATIONS FOR PERMIT APPLICATION

Copyright © 2023 USI ITALIA
This drawing is not to be reproduced, either in whole or in part, without the permissions of USI ITALIA.

ALL EQUIPMENT IS DESIGNED EXPRESSLY FOR PARTICULATE MATTER ONLY. REDUCTION OF "VOLATILE ORGANIC COMPOUNDS" REQUIRES EITHER COATING REMOVAL AND/OR RCO, OPTIONAL, ADDITIONAL EQUIPMENT.

Intertek

USI north america
PHONE +1 201-405-7760
565 Commerce St, Franklin Lakes, NJ 07417, United States

BY	CHECKED
DMD	DRK
ISSUE	**DATE**
R0	2023.12.05

PROJECT NAME
TESLA ENGLEWOOD

ENGINEER
RENO JAMES ENGINEERING
303.800.5105
3760 VANCE ST STE 301
WHEAT RIDGE, CO 80033

STAMP

COLORADO LICENSED PROFESSIONAL ENGINEER RENO BRYANT JAMES 40380 2023.12.08

SHEET DESCRIPTION
FIRE SUPPRESSION DETAIL

SHEET NUMBER
M-4.7

FIRE SUPRESSION SYSTEM,
INFORMATION PURPOSE.

The supply is not at USI Italia charge. The position and quantity of sprinklers depends on local code.

FRONT VIEW

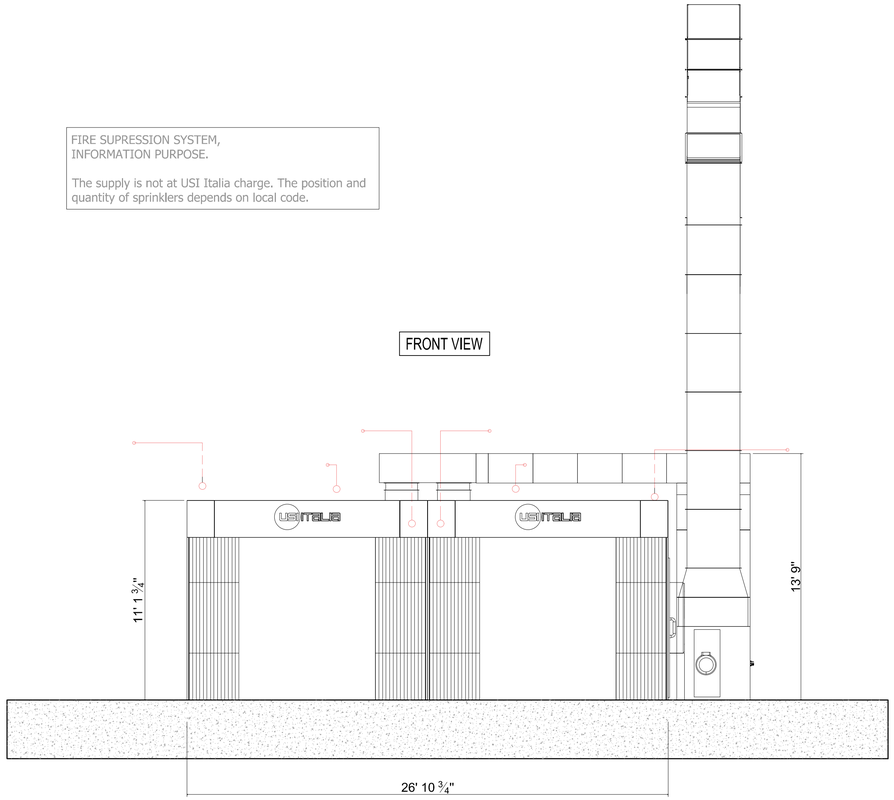

OVERALL VIEW

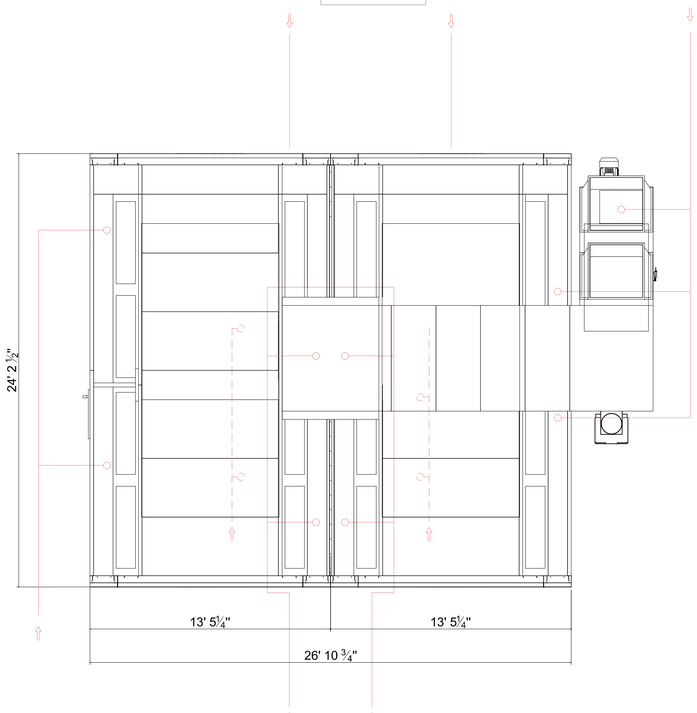

EXPLOSION VENT OPENING AREA IN COMPLIANCE WITH NFPA 101

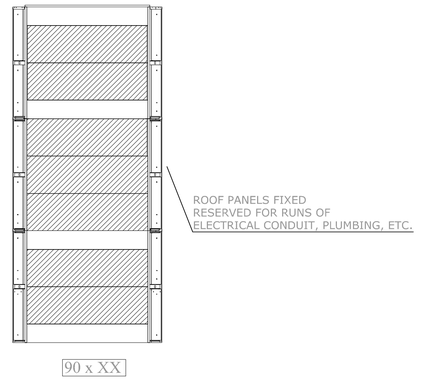

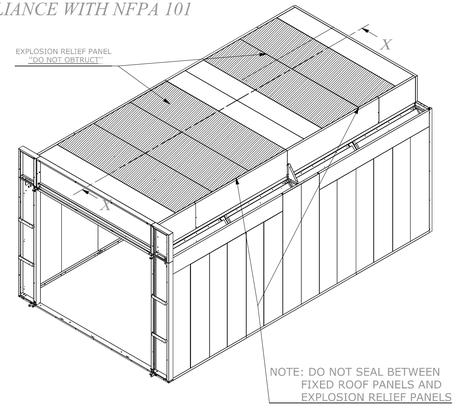

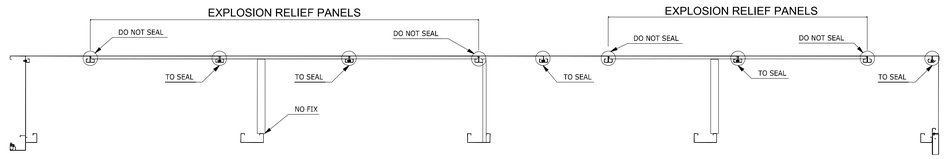

X-X

		OBJECT: INSTALLATION OF PLENUM		
DESIGNER	NR	APRR. SC.	DATE	NET WEIGTH---
DATE	SCALE	DRW.N°		REV. 00

DETAIL A

EXPLOSION VENT OPENIN AREA IN COMPLIANCE WITH NFPA 101

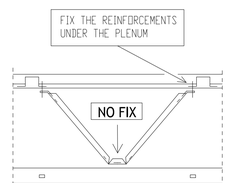

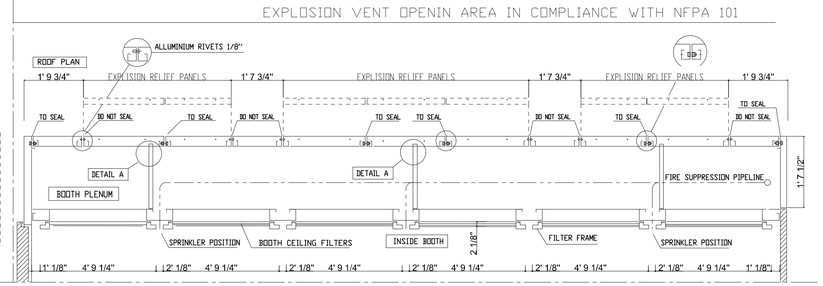

NOTE: FIRE SUPPRESION SYSTEM IS NOT INCLUDED WITH STANDARD BOOTH BUT IS REQUIRED BY N.F.P.A. BULLETIN N. 33

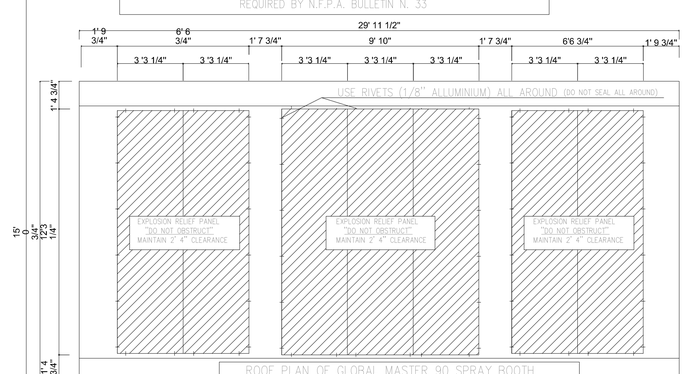

NOTE: DO NOT SEAL BETWEEN FIXED ROOF PANELS AND EXPLOSION RELIEF PANELS

The installation has been designed based on precise customer's requests, and it is his exclusive responsibility to have a local professional engineer check, at his expense, that the installation complies with local codes in force and to get all necessary permits from the competent authorities. Exclusively at the customer's care and expense are: having a local professional engineer make the calculations pertaining to and deriving from the foundation works; the supply and installation of any profiles to fit into the foundations, hook-ups to the existing structure for supporting and/or fixing materials supplied by USI ITALIA, and getting all necessary permits from the competent authorities.

ALL EQUIPMENT IS DESIGNED EXPRESSLY FOR "TESLA" PAINT PARTICULATE MATTER ONLY. REDUCTION OF "VOLATILE ORGANIC COMPOUNDS" REQUIRES EITHER COATING REMOVAL AND/OR RETROFIT OPTIONAL, ADDITIONAL EQUIPMENT.

Intertek

SHOP DIMENSIONS BASED ON BEST AVAILABLE INFORMATION RECEIVED
****CONTRACTOR'S RESPONSIBILITY:**
-VERIFY EQUIPMENT MODEL NUMBERS IN DRAWING WITH EQUIPMENT ON ORDER.
-FINAL LOCATION OF EQUIPMENT.
-FEED LISTED ALL DIMENSIONS.
-VERIFY COMPLIANCE WITH ALL NATIONAL AND LOCAL CODES WITHIN JURISDICTION OF INSTALLATION SITE.
SPECIFICATIONS FOR PERMIT APPLICATION

Copyright © 2023 USI ITALIA
This drawing is not to be reproduced, either in whole or in part, without the permissions of USI ITALIA

usi italia america
PHONE +1 201-405-7760
565 Commerce St, Franklin Lakes, NJ 07417, United States

BY	CHECKED
DMD	DRK

ISSUE	DATE
R0	2023.12.05

PROJECT NAME
TESLA ENGLEWOOD

ENGINEER

RENO JAMES ENGINEERING
303.800.5105
3760 VANCE ST STE 301
WHEAT RIDGE, CO 80033

STAMP

COLORADO LICENSED
RENO JAMES
2023.12.18
40380
PROFESSIONAL ENGINEER

SHEET DESCRIPTION
FIRE SPRINKLER LOCATIONS

SHEET NUMBER
M-4.8

USI ITALIA s.r.l.
VIA DELLA METALLURGIA 14
37139 VERONA – ITALY

Intertek 60023

Conforms to: ANSI Z83.4-2015
Certified to: CGA 3.7-2015

SERIAL No.	USHU10064C01				
MODEL	RAC150TU+DF-450KWT-ES				
	VOLTS	PHASE	HERTZ	F.L.A.	KW
SUPPLY FAN	460/480	3	60	9.7/9.3	11
EXHAUST FAN	460/480	3	60	9.7/9.3	11
BURNER	120	1	60	2	240 W
SUPPLY PRESSURE	MAX. 14" w.c. MIN. 6" w.c.				
INPUT RATING	MAX.	980,000	BTU/H		
	MIN.	50,000	BTU/H		
HIGH FIRE SETTING	NATURAL GAS	980,000	BTU/H		
	PROPANE	980,000	BTU/H		
BURNER MODEL	MIDCO DF 1500 HMA-2A	SERIAL No. …….			
FAN AIR VOLUME	16500 CFM	2.97" w.c. Tot. Press.			
MAX. FAN CAPACITY	20500 CFM	1.32" w.c. Tot. Press.			

- Conforms to ANSI Std Z83.4, Z83.4A, Z83.4B; Certified to CSA Std 3.7, 3.7A, 3.7B.
  Non-Recirculating Direct Industrial Air Heater
- Direct Industrial Air Heater; For Industrial/Commercial Use

4740011

intertek
Total Quality. Assured.

AUTHORIZATION TO MARK

This authorizes the application of the Certification Mark(s) shown below to the models described in the Product(s) Covered section when made in accordance with the conditions set forth in the Certification Agreement and Listing Report. This authorization also applies to multiple listee model(s) identified on the correlation page of the Listing Report.

This document is the property of Intertek Testing Services and is not transferable. The certification mark(s) may be applied only at the location of the Party Authorized To Apply Mark.

Applicant: U.S.I. Italia, S.R.L.
Address: Via Della Metallurgia N14
37139 Verona, ITALY

Country: Italy
Contact: Matteo Melegatti
Phone: 45-851-0388
FAX: 45-851-7365
Email: m.melegatti@usiitalia.it

Manufacturer: U.S.I. Italia, S.R.L.
Address: Via Della Metallurgia N14
37139 Verona, ITALY

Country: Italy
Contact: Matteo Melegatti
Phone: 45-851-0388
FAX: 45-851-7365
Email: m.melegatti@usiitalia.it

Party Authorized To Apply Mark: Same as Manufacturer
Report Issuing Office: Intertek Cortland

Control Number: 60023 **Authorized by:** Nigel Leon
for L. Matthew Snyder, Certification Manager

ETL CLASSIFIED
Intertek

This document supersedes all previous Authorizations to Mark for the noted Report Number.

This Authorization to Mark is for the exclusive use of Intertek's Client and is provided pursuant to the Certification agreement between Intertek and its Client. Intertek's responsibility and liability are limited to the terms and conditions of the agreement. Intertek assumes no liability to any party, other than to the Client in accordance with the agreement, for any loss, expense or damage occasioned by the use of this Authorization to Mark. Only the Client is authorized to permit copying or distribution of this Authorization to Mark and then only in its entirety. Use of Intertek's Certification mark is restricted to the conditions laid out in the agreement and in this Authorization to Mark. Any further use of the Intertek name for the sale or advertisement of the tested material, product or service must first be approved in writing by Intertek. Initial Factory Assessments and Follow up Services are for the purpose of assuring appropriate usage of the Certification mark in accordance with the agreement, they are not for the purposes of production quality control and do not relieve the Client of their obligations in this respect.

Intertek Testing Services NA Inc.
545 East Algonquin Road, Arlington Heights, IL 60005
Telephone 800-345-3851 or 847-439-5667 Fax 312-283-1672

Standard(s):	Standard For Spray Application Using Flammable Or Combustible Materials [NFPA 33:2017 Ed.2018] Commercial-Industrial Gas Heating Equipment [UL 795:2016 Ed.8]
Product:	Spray Paint and Drying Booths.
Models:	MODULO MASTER 70.40.28.IS MODULO MASTER 80.40.28.IS MASTER CHRONOTECH CARGO

ATM for Report 102674236CRT-002 Page 1 of 1 ATM Issued: 13-Feb-2020
ED 16.3.15 (20-Apr-17) Mandatory

MEG

The installation has been designed based on precise customer's requests, and it is his exclusive responsibility to have a local professional engineer check, at his expense, that the installation complies with local codes in force and to get all necessary permits from the competent authorities. Exclusively at the customer's care and expense are: having a local professional engineer make the calculations pertaining to and deriving from the foundation works; the supply and installation of any profiles to fit into the foundations, hook-ups to the existing structure for supporting and/or fixing materials supplied by USI ITALIA, and getting all necessary permits from the competent authorities.

USI ITALIA

ALL EQUIPMENT IS DESIGNED EXPRESSLY FOR WET PAINT WITH PARTICULATE MATTER ONLY. REDUCTION OF "VOLATILE ORGANIC COMPOUNDS" REQUIRES EITHER COATING REMOVAL AND/OR RECYCLING AUTHORIZATION OPTIONAL, ADDITIONAL EQUIPMENT.

Intertek

SHOP DIMENSIONS BASED ON BEST AVAILABLE INFORMATION RECEIVED
****DESIGN DIMENSIONS RESPONSIBILITY:**
-VERIFY EQUIPMENT MODEL NUMBERS IN DRAWING WITH EQUIPMENT ON ORDER.
-FINAL LOCATION OF EQUIPMENT.
-FIELD VERIFY ALL DIMENSIONS.
-VERIFY COMPLIANCE WITH ALL NATIONAL AND LOCAL CODES WITHIN JURISDICTION OF INSTALLATION SITE.
SPECIFICATIONS FOR PERMIT APPLICATION

Copyright © 2023 USI ITALIA
This drawing is not to be reproduced, either in whole or in part, without the permissions of USI ITALIA.

usi north america
PHONE +1 201-405-7760
565 Commerce St, Franklin Lakes, NJ 07417, United States

BY	CHECKED
DMD	DRK

ISSUE	DATE
R0	2023.12.05

PROJECT NAME
TESLA ENGLEWOOD

ENGINEER
RENO JAMES ENGINEERING
303.800.5105
3760 VANCE ST STE 301
WHEAT RIDGE, CO 80033

STAMP
COLORADO LICENSED RENO JAMES ENGINEERING 40380 PROFESSIONAL ENGINEER
2023.12.08

SHEET DESCRIPTION
INTERTEK LISTING - PAINT BOOTH

SHEET NUMBER
M-5.1

USI ITALIA s.r.l.
VIA DELLA METALLURGIA 14
37139 VERONA – ITALY

ETL CLASSIFIED
Intertek 60023

Conforms to: NFPA 33 - UL-795
Certified to: CGA CR90-003

MODEL	LFW-SD220		ACTIVATION KEY	1436AC9D1	
SERIAL No.	USPS10064Z01		MANUFACTURED YEAR	2021	
SUPPLY PLENUM OR WORK AREA DIMENSIONS	WIDE	LONG	HEIGHT	GRATING LOAD CAPACITY	
	26'	23'4"	9'3"	Lbs/axle	
LIGHT FIXTURES No. 16	2048 W	120V 60Hz		17,07 A	
INTAKE FAN No. 1	11 kW	460/480V 60Hz		19.4/18.5 FLA	
EXHAUST FAN No. 1	11 kW	460/480V 60Hz		19.4/18.5 FLA	
FAN AIR VOLUME	16500 CFM	AT TOTAL PRESSURE		2.97" w.c.	
MAX. FAN CAPACITY	20500 CFM	AT TOTAL PRESSURE		1.32" w.c.	

4740035

intertek
Total Quality. Assured.

AUTHORIZATION TO MARK

This authorizes the application of the Certification Mark(s) shown below to the models described in the Product(s) Covered section when made in accordance with the conditions set forth in the Certification Agreement and Listing Report. This authorization also applies to multiple listee model(s) identified on the correlation page of the Listing Report.

This document is the property of Intertek Testing Services and is not transferable. The certification mark(s) may be applied only at the location of the Party Authorized To Apply Mark.

Applicant:	USI Italia, S.R.L.	**Manufacturer:**	USI Italia, S.R.L.
Address:	Via Delia Metallurgia 37139 Verona	**Address:**	Via Delia Metallurgia 37139 Verona
Country:	Italy	**Country:**	Italy
Contact:	Matteo Melegatti	**Contact:**	Matteo Melegatti
Phone:	39 458510388	**Phone:**	39 458510388
FAX:	39 458517365	**FAX:**	39 458517365
Email:	NA	**Email:**	NA

Party Authorized To Apply Mark: Same as Manufacturer
Report Issuing Office: Cortland, NY 13045

Control Number: _____ **Authorized by:** _____
for Dean Davidson, Certification Manager

ETL CLASSIFIED
Intertek

This document supersedes all previous Authorizations to Mark for the noted Report Number.

This Authorization to Mark is for the exclusive use of Intertek's Client and is provided pursuant to the Certification agreement between Intertek and its Client. Intertek's responsibility and liability are limited to the terms and conditions of the agreement. Intertek assumes no liability to any party, other than to the Client in accordance with the agreement, for any loss, expense or damage occasioned by the use of this Authorization to Mark. Only the Client is authorized to permit copying or distribution of this Authorization to Mark and then only in its entirety. Use of Intertek's Certification mark is restricted to the conditions laid out in the agreement and in this Authorization to Mark. Any further use of the Intertek name for the sale or advertisement of the tested material, product or service must first be approved in writing by Intertek. Initial Factory Assessments and Follow up Services are for the purpose of assuring appropriate usage of the Certification mark in accordance with the agreement, they are not for the purposes of production quality control and do not relieve the Client of their obligations in this respect.

Intertek Testing Services NA Inc.
545 East Algonquin Road, Arlington Heights, IL 60005
Telephone 800-345-3851 or 847-439-5667 Fax 312-283-1672

Standard(s):	Standard for Spray Application Using Flammable or Combustible Materials NFPA33-2016
Product:	Limited Finishing Workstations.
Models:	LFW-FD110 and LFW-FD220; LFW-SD110 and LFW-SD220.

The installation has been designed based on precise customer's requests, and it is his exclusive responsibility to have a local professional engineer check, at his expense, that the installation complies with local codes in force and to get all necessary permits from the competent authorities. Exclusively at the customer's care and expense are: having a local professional engineer make the calculations pertaining to and deriving from the foundation works; the supply and installation of any profiles to fit into the foundations, hook-ups to the existing structure for supporting and/or fixing materials supplied by USI ITALIA, and getting all necessary permits from the competent authorities.

ALL EQUIPMENT IS DESIGNED EXPRESSLY FOR PARTICULATE MATTER ONLY. REDUCTION OF "VOLATILE ORGANIC COMPOUNDS" REQUIRES EITHER COATING REMOVAL AND/OR A OPTIONAL, ADDITIONAL EQUIPMENT.

Intertek

SHOP DIMENSIONS BASED ON BEST AVAILABLE INFORMATION RECEIVED
****DISTRIBUTOR'S RESPONSIBILITY:**
-VERIFY EQUIPMENT MODEL NUMBERS IN DRAWING WITH EQUIPMENT ON ORDER.
-FINAL LOCATION OF EQUIPMENT.
-FEED LISTING ALL DIMENSIONS.
-VERIFY COMPLIANCE WITH ALL NATIONAL AND LOCAL CODES WITHIN JURISDICTION OF INSTALLATION SITE.
SPECIFICATIONS FOR PERMIT APPLICATION

Copyright © 2023 USI ITALIA
This drawing is not to be reproduced, either in whole or in part, without the permissions of USI ITALIA.

usi america
PHONE +1 201-405-7760
565 Commerce St, Franklin Lakes, NJ 07417, United States

BY	CHECKED
DMD	DRK

ISSUE	DATE
R0	2023.12.05

PROJECT NAME
TESLA ENGLEWOOD

ENGINEER
RENO JAMES ENGINEERING
303.800.5105
3760 VANCE ST STE 301
WHEAT RIDGE, CO 80033

STAMP
COLORADO LICENSED
DAVID RENO JAMES
2023.12.05
40380
PROFESSIONAL ENGINEER

SHEET DESCRIPTION
INTERTEK LISTING - LIMITED FINISHING WORKSTATION

SHEET NUMBER
M-5.2

USI ITALIA s.r.l.
VIA DELLA METALLURGIA 14
37139 VERONA – ITALY

ETL CLASSIFIED
Intertek
60023

Conforms to: NFPA 33 Standard for Spray Application Using Flammable and Combustible Materials

MODEL	**BV33**				
SERIAL No.	**USMR10064B01**		**MANUFACTURED YEAR**		**2021**
INSIDE DIMENSIONS	**WIDE**	**LONG**	**HEIGHT**	**ROOM AREA**	
	118 1/8 in	**118 1/8 in**	**110 1/4 in**	**96.84 sqft**	
LIGHT FIXTURES No. 2	**256 W 2,13 A 120V 60Hz Single Phase**				
EXHAUST MOTOR/S No. 1	**180 W 1,50 A 120V 60Hz Single Phase**				
TOTAL AIR FLOW OF THE EXHAUST SYSTEM				**500 cfm**	
TOTAL POWER SINGLE PHASE	**436 W 3,63 A 120V 60Hz Single Phase**				

4740032

intertek
Total Quality. Assured.

AUTHORIZATION TO MARK

This authorizes the application of the Certification Mark(s) shown below to the models described in the Product(s) Covered section when made in accordance with the conditions set forth in the Certification Agreement and Listing Report. This authorization also applies to multiple listee model(s) identified on the correlation page of the Listing Report.

This document is the property of Intertek Testing Services and is not transferable. The certification mark(s) may be applied only at the location of the Party Authorized To Apply Mark.

Applicant:	USI Italia S.R.L.	**Manufacturer:**	**USI Italia S.R.L.**
Address:	Via Della Metallurgia 37139 Verona	**Address:**	Via Della Metallurgia 37139 Verona
Country:	Italy	**Country:**	Italy
Contact:	Barbara Schyma	**Contact:**	Barbara Schyma
Phone:	45-851-0388	**Phone:**	45-851-0388
FAX:	45-851-7365	**FAX:**	45-851-7365
Email:	NA	**Email:**	NA

Party Authorized To Apply Mark: Same as Manufacturer
Report Issuing Office: Intertek, Cortland, NY 13045

Control Number: 60023 **Authorized by:**
for Dean Davidson, Certification Manager

ETL CLASSIFIED
Intertek

This document supersedes all previous Authorizations to Mark for the noted Report Number.

This Authorization to Mark is for the exclusive use of Intertek's Client and is provided pursuant to the Certification agreement between Intertek and its Client. Intertek's responsibility and liability are limited to the terms and conditions of the agreement. Intertek assumes no liability to any party, other than to the Client in accordance with the agreement, for any loss, expense or damage occasioned by the use of this Authorization to Mark. Only the Client is authorized to permit copying or distribution of this Authorization to Mark and then only in its entirety. Use of Intertek's Certification mark is restricted to the conditions laid out in the agreement and in this Authorization to Mark. Any further use of the Intertek name for the sale or advertisement of the tested material, product or service must first be approved in writing by Intertek. Initial Factory Assessments and Follow up Services are for the purpose of assuring appropriate usage of the Certification mark in accordance with the agreement, they are not for the purposes of production quality control and do not relieve the Client of their obligations in this respect.

Intertek Testing Services NA Inc.
545 East Algonquin Road, Arlington Heights, IL 60005
Telephone 800-345-3851 or 847-439-5667 Fax 312-283-1672

Standard(s):	Standard For Spray Application Using Flammable Or Combustible Materials [NFPA 33:2016]
Product:	Paint Mixing Rooms
Models:	BV22, BV23, BV33, BV43 and BV52.

ATM for Report 3062670-001
DAN

ATM Issued: 15-Jun-2018
ED 16.3.15 (20-Apr-17) Mandatory

The installation has been designed based on precise customer's requests, and it is his exclusive responsibility to have a local professional engineer check, at his expense, that the installation complies with local codes in force and to get all necessary permits from the competent authorities. Exclusively at the customer's care and expense are: having a local professional engineer make the calculations pertaining to and deriving from the foundation works; the supply and installation of any profiles to fit into the foundations, hook-ups to the existing structure for supporting and/or fixing materials supplied by USI ITALIA, and getting all necessary permits from the competent authorities.

ALL EQUIPMENT IS DESIGNED EXPRESSLY FOR PAINT BOOTHS WITH PARTICULATE MATTER ONLY. REDUCTION OF "VOLATILE ORGANIC COMPOUNDS" REQUIRES EITHER COATING REMOVAL AND/OR REGENERATIVE AIR, OPTIONAL, ADDITIONAL EQUIPMENT.

Intertek

SHOP DIMENSIONS BASED ON BEST AVAILABLE INFORMATION RECEIVED
****DOCUMENTATION RESPONSIBILITY:**
-VERIFY EQUIPMENT MODEL NUMBERS IN DRAWING WITH EQUIPMENT ON ORDER.
-FINAL LOCATION OF EQUIPMENT.
-VERIFY ALL DIMENSIONS.
-VERIFY COMPLIANCE WITH ALL NATIONAL AND LOCAL CODES WITHIN JURISDICTION OF INSTALLATION SITE.
SPECIFICATIONS FOR PERMIT APPLICATION

Copyright © 2023 USI ITALIA
This drawing is not to be reproduced, either in whole or in part, without the permissions of USI ITALIA.

usi new america
PHONE +1 201-405-7760
565 Commerce St, Franklin Lakes, NJ 07417, United States

BY	CHECKED
DMD	DRK

ISSUE	DATE
R0	2023.12.05

PROJECT NAME
TESLA ENGLEWOOD

ENGINEER
RENO JAMES ENGINEERING
303.800.5105
3760 VANCE ST STE 301
WHEAT RIDGE, CO 80033

STAMP
COLORADO LICENSED
RENO JAMES
2023.12.08
40380
PROFESSIONAL ENGINEER

SHEET DESCRIPTION
INTERTEK LISTING - MIXING BOOTH

SHEET NUMBER
M-5.3

GENERAL STRUCTURAL NOTES

1. CODES AND MANUALS:
   INTERNATIONAL BUILDING CODE, 2021 EDITION
   MINIMUM DESIGN LOADS FOR BUILDINGS AND OTHER STRUCTURES, ASCE 7-16,
   AISC MANUAL OF STEEL CONSTRUCTION, 9TH EDITION
   SJI STANDARD SPECIFICATIONS, LOAD TABLES AND WEIGHT TABLES FOR STEEL
   JOISTS AND JOIST GIRDERS
   SDI DIAPHRAGM DESIGN MANUAL, 2ND EDITION
   AISI COLD FORMED STEEL MANUAL, CURRENT EDITION
   ACI BUILDING CODE REQUIREMENTS FOR REINFORCED CONCRETE, ACI 318
   AWS D1.1 AND D1.3

2. DESIGN CRITERIA:
   A. VERTICAL:
      LIVE LOAD
      ROOF (SNOW) 30 PSF + DRIFTS
      SERVICE FLOOR 125 PSF

      Is (IMPORTANCE FACTOR FOR SNOW) 1.1
   * LOAD HAS NOT BEEN REDUCED
   B. HORIZONTAL LOADS:
   (1) WIND*
   PROCEDURE PER SECTION 1609

   P = WIND PRESSURE x λ Iw

   WIND SPEED V3s=115 MPH
   WIND PRESSURE : END ZONE 21.0 PSF
   INTERIOR ZONE 13.9 PSF
   HEIGHT & EXPOSURE ADJUSTMENT COEFFICIENT FROM FIGURE 6-2 IN ASCE
   IMPORTANCE FACTOR Iw = 1.15
   HORIZONTAL WIND LOAD:

	END	INTERIOR
0 - 15'	25.4 PSF	16.8 PSF
15' - 20'	27.1 PSF	17.9 PSF
20' - 25'	28.4 PSF	18.8 PSF
25' - 30'	29.4 PSF	19.5 PSF

   (2) SEISMIC* V = Sds Ie W / R
   SPECTRAL ACCELERATIONS Ss=0.204
   S1=0.057
   SITE CLASS D
   IMPORTANCE FACTOR Ie = 1.1
   DESIGN SPECTRAL RESPONSE Sds = 0.217
   ONE SECOND PERIOD RESPONSE ACCEL. Sd1 = 0.091
   RESPONSE MODIFICATION COEFFICIENT R = 3.25
   SEISMIC DESIGN CATEGORY B
   SEISMIC FORCE V = 0.073 X W

   * ALLOWABLE 1/3 STRESS INCREASE FOR SEISMIC LOADING
   C. ALLOWABLE SOIL BEARING PRESSURE = 1500 PSF (IBC).

3. GENERAL:
   A. THE CONTRACTOR SHALL FIELD VERIFY ALL DIMENSIONS AND LAYOUT OF BOTH SITE AND BUILDING ELEMENTS. COORDINATE FIELD INFORMATION WITH ARCHITECTURAL PRIOR TO ANY CONSTRUCTION ACTIVITY .
   B. SHOP DRAWINGS, IN HARD COPY FORM, SHALL BE FURNISHED AND REVIEWED BEFORE ANY FABRICATION OR ERECTION IS STARTED.
   C. THE CONTRACTOR SHALL REVIEW AND APPROVE SHOP DRAWINGS PRIOR TO SUBMITTAL TO THE ARCHITECT FOR REVIEW. POORLY EXECUTED SHOP DRAWINGS WILL BE REJECTED AND REQUIRE RESUBMITTAL.
   D. THE CONTRACTOR SHALL BE RESPONSIBLE FOR PROVIDING SAFE AND ADEQUATE SHORING FOR ALL PARTS OF THE STRUCTURE DURING CONSTRUCTION.
   E. TEMPORARY PROVISIONS SHALL BE MADE FOR STRUCTURAL STABILITY DURING CONSTRUCTION. THE STRUCTURE SHOWN ON THE DRAWINGS HAS BEEN DESIGNED FOR STABILITY UNDER FINAL CONFIGURATION.
   F. THE CONTRACTOR SHALL COORDINATE AND VERIFY ALL OPENINGS IN FLOORS, ROOF, WALLS AND BEAMS WITH THE INDIVIDUAL TRADES.
   G. NOTCHING OR CUTTING ANY STRUCTURAL MEMBER IN THE FIELD IS PROHIBITED.
   H. THE CONTRACTOR SHALL VERIFY THE SIZE AND LOCATION OF FOUNDATIONS UNDER MECHANICAL AND ELECTRICAL EQUIPMENT AS REQUIRED. NO CONCRETE PADS SHALL BE LOCATED ON ROOF UNLESS SHOWN ON STRUCTURAL DRAWINGS.
   I. REMOVAL OF FORMS SHALL BE IN ACCORDANCE WITH ACI 347. WHERE CONCRETE MUST SUPPORT SUPERIMPOSED LOADS PRIOR TO ATTAINING THE SPECIFIED DESIGN STRENGTH, RESHORE CONCRETE IN ACCORDANCE WITH ACI 347. RESHORING SHALL NOT BE REMOVED SOONER THAN 28 DAYS FROM THE DATE OF POUR OR UNTIL CONCRETE HAS ATTAINED THE SPECIFIED DESIGN STRENGTH.

4. MATERIALS:
   A. CAST-IN-PLACE CONCRETE:
   (1) ALL CONCRETE SHALL CONFORM TO THE SPECIFICATIONS FOR STRUCTURAL CONCRETE, ACI 301-10.
   (2) ALL EXPOSED EDGES OF CONCRETE SHALL HAVE A 3/4" CHAMFER UNLESS NOTED OTHERWISE.
   (3) NORMALWEIGHT CONCRETE:
   A. F'C = 4000 PSI @ 28 DAYS (AIR ENTRAINED) - ALL EXPOSED EXTERIOR CONCRETE FLAT WORK. (I.E. SLABS, EQUIPMENT PADS, ETC.).
   B. F'C = 3000 PSI @ 28 DAYS - ALL INTERIOR CONCRETE (AIR ENTRAINED) IE. , FOOTINGS, PEDESTALS, STEM WALLS, ETC.)
   C. F'C = 4000 PSI @ 28 DAYS - ALL INTERIOR SLABS ON GRADE.
   D. F'C = 4000 PSI @ 28 DAYS (AIR ENTRAINED) - ALL WALLS.
   E. F'C = 5000 PSI @ 28 DAYS - AUGER CAST PILES.
   (4) THE CONTRACTOR SHALL NOT CAST FOUNDATIONS, STEM WALLS OR RETAINING WALLS AGAINST EXCAVATED VERTICAL SIDE SURFACES WITHOUT PRIOR WRITTEN APPROVAL FROM ARCHITECT AND STRUCTURAL ENGINEER.
   (5) FLYASH ADDITIVES MAY NOT EXCEED 20% OF THE CEMENTITIOUS MATERIAL.
   (6) THE MAXIMUM WATER TO CEMENTITIOUS MATERIAL RATIO, BY WEIGHT, MAY NOT EXCEED 50%.
   (7) THE OWNER'S SPECIAL INSPECTOR SHALL MONITOR SAMPLING & TESTING PERFORMED BY THE CONTRACTOR'S TESTING AGENCY.
   (8) MAXIMUM SLUMP FOR CONCRETE MIX DESIGN IS 4".

   B. REINFORCING STEEL:
   (1) ALL REINFORCING STEEL SHALL BE FABRICATED AND PLACED IN ACCORDANCE WITH THE BUILDING CODE REQUIREMENTS FOR REINFORCED CONCRETE (ACI 318) AND THE STANDARD MANUAL (ACI 315-99).
   (2) ALL REINFORCING STEEL SHALL CONFORM TO ASTM A615 GRADE 60 EXCEPT STIRRUPS, TIES AND FIELD-BENT BARS WHICH SHALL CONFORM TO ASTM A615 GRADE 40.
   (3) ALL SLABS SHALL BE REINFORCED AS SHOWN ON THE DRAWINGS.
   (4) WHERE LAPPED SPLICES IN REINFORCING OCCUR, THE MINIMUM LAP SHALL BE MADE AS FOLLOWS UNLESS NOTED OTHERWISE ON DRAWINGS:
   A. VERTICAL REINFORCING:30 BAR DIA. (18" MINIMUM)
   B. HORIZONTAL REINFORCING:30 BAR DIA. (18" MINIMUM)
   (5) ALL HORIZONTAL REINFORCING IN FOOTINGS, BEAMS, AND WALLS SHALL BE CONTINUOUS AROUND CORNERS OR HAVE CORNER BARS OF THE SAME SIZE AND SPACING AS THE HORIZONTAL BARS AND LAP A MINIMUM OF 30 BAR DIAMETERS, (18 INCHES MINIMUM).
   (6) CONCRETE COVER FOR REINFORCING SHALL BE AS FOLLOWS UNLESS OTHERWISE NOTED:
   A. CONCRETE CAST AGAINST AND PERMANENTLY EXPOSED TO EARTH...3"
   B. CONCRETE EXPOSED TO EARTH OR WEATHER:
   1. BARS LARGER THAN NO. 5.....2"
   2. BARS NO. 5 OR SMALLER.....1 1/2"
   (7) FORM TIES SHALL BE EITHER OF THE THREADED OR SNAP-OFF TYPE SO THAT NO METAL WILL BE LEFT WITHIN 1 INCH OF THE SURFACE OF THE WALL.
   (8) BAR SUPPORTS AND SPACERS FOR REINFORCING SHALL BE PROVIDED IN ACCORDANCE WITH ACI 315-99. CHAIRS WITH 22 GA. SAND PLATES OR PRECAST BLOCKS SHALL BE PROVIDED FOR ALL REINFORCING OF CONCRETE IN CONTACT WITH GRADE. REINFORCING SHALL BE SECURELY TIED TO SUPPORTS.
   (9) REINFORCING SHALL NOT BE TACK WELDED OR WELDED IN ANY MANNER UNLESS SPECIFICALLY DETAILED ON THE STRUCTURAL PLANS. IF DRAWINGS SHOW REBAR TO BE WELDED, USE ASTM A706 REBAR.

   C. STRUCTURAL AND MISCELLANEOUS STEEL:
   (1) ALL STRUCTURAL STEEL SHALL BE DETAILED AND FABRICATED IN ACCORDANCE WITH THE AISC "SPECIFICATION FOR THE DESIGN, FABRICATION AND ERECTION OF STRUCTURAL STEEL FOR BUILDINGS".
   (2) ALL W-SHAPED MEMBERS SHALL CONFORM TO ASTM A992 (Fy=50KSI). ALL CHANNELS, ANGLES, & PLATES SHALL BE ASTM A36 (Fy=36KSI). ALL PIPE STEEL SHALL BE ASTM A501 (Fy=36KSI).
   (3) ALL COLD FORMED STRUCTURAL TUBING SHALL CONFORM TO ASTM A500 GRADE B. FY = 46 KSI.
   (4) BOLTS SHALL CONFORM TO ASTM A325 TENSION CONTROL BOLTS UNLESS NOTED OTHERWISE, WITH SIZES AS SHOWN ON THE DRAWINGS. WHERE CLEARANCE WITHIN A CONNECTION DOES NOT PERMIT THE USE OF TENSION CONTROL BOLTS, STANDARD A325 BOLTS SHALL BE USED AND INSPECTED IN ACCORDANCE WITH THE AISC "SPECIFICATION FOR STRUCTURAL JOINTS USING ASTM A325 OR A490 BOLTS".
   (5) ALL BOLTS SHALL BE TIGHTENED SO AS TO SHEAR THE SPLINE OFF THE BOLT.
   (6) ANCHOR BOLTS EMBEDDED IN CONCRETE SHALL BE ASTM A307 BOLTS OR A36 THREADED BARS. PROVIDE FLAT WASHERS BETWEEN ALL NUTS AND BASEPLATES.
   (7) ALL WELDING SHALL BE DONE IN ACCORDANCE WITH THE LATEST STANDARDS OF THE AWS STRUCTURAL WELDING CODE.
   (8) ALL BOLT HOLES THAT ARE REQUIRED TO BE FIELD DRILLED SHALL BE DRILLED WITH A MAG DRILL. FLAME CUTTING OF HOLES OR ENLARGING OF UNFAIR HOLES WILL NOT BE ALLOWED.
   (9) HEADED CONCRETE ANCHORS AND SHEAR CONNECTORS SHALL BE TYPE B, IN CONFORMANCE WITH AWS D1.1 "STRUCTURAL WELDING CODE-STEEL". STRUCTURAL STEEL TO RECEIVE SHEAR CONNECTIONS SHALL BE FREE OF PAINT. WELDING PRE QUALIFICATION REQUIRED.

5. POST INSTALLED ANCHORS
   POST-INSTALLED ANCHORS SHALL ONLY BE USED WHERE SPECIFIED ON THE CONSTRUCTION DOCUMENTS. THE CONTRACTOR SHALL OBTAIN APPROVAL FROM THE ENGINEER-OF-RECORD PRIOR TO INSTALLING POST-INSTALLED ANCHORS IN PLACE OF MISSING OR MISPLACED CAST-IN-PLACE ANCHORS. CARE SHALL BE TAKEN IN PLACING POST-INSTALLED ANCHORS TO AVOID CONFLICTS WITH EXISTING REBAR. HOLES SHALL BE DRILLED AND CLEANED IN ACCORDANCE WITH THE MANUFACTURERE'S WRITTEN INSTRUCTIONS. SUBSTITUTION REQUESTS FOR PRODUCTS OTHER THAN THOSE SPECIFIED BELOW SHALL BE SUBMITTED BY THE CONTRACTOR TO THE ENGINEER-OF-RECORD ALONG WITH CALCULATIONS THAT ARE PREPARED & SEALED BY A REGISTERED PROFESSIONAL ENGINEER. THE CALCULATIONS SHALL DEMONSTRATE THAT THE SUBSTITUTED PRODUCT IS CAPABLE OF ACHIEVING THE PERTINENT EQUIVALENT PERFORMANCE VALUES (MINIMUM) OF THE SPECIFIED PRODUCT USING THE APPROPRIATE DESIGN PROCEDURE AND/OR STANDARD(S) AS REQUIRED BY THE BUILDING CODE. PROVIDE CONTINUOUS SPECIAL INSPECTION FOR ALL ADHESIVES AND MECHANICAL ANCHORS PER THE PRODUCT'S APPLICABLE ICC-ES EVALUATION REPORT (ICC-ES-ESR). CONTACT MANUFACTURER'S REPRESENTATIVE FOR THE INTIAL TRAINING AND INSTALLATION OF ANCHORS AND FOR PRODUCT RELATED QUESTIONS AND AVAILABILITY. CALL SIMPSON STRONG-TIE AT (800) 999-5099 OR HILTI AT (866) 445-8827.

   A. CONCRETE ANCHORS:
   1. MECHANICAL ANCHORS SHALL HAVE BEEN TESTED AND QUALIFIED FOR USE IN ACCORDANCE WITH ACI 3552 AND ICC-ES ACI93 FOR CRACKED AND UNCRACKED CONCRETE RECOGNITION.
      PRE-APPROVED MECHANICAL ANCHORS INCLUDE:
      a. SIMPSON STRONG-TIE "TITEN HD" (ICC-ES ESR-2713)
      b. SIMPSON STRONG-TIE "STRONG-BOLT" (ICC-ES ESR-1771) OR HILTI "KWIK BOLT TZ" (ICC-ES ESR-1917)
   2. ADHESIVE ANCHORS SHALL HAVE BEEN TESTED AND QUALIFIED FOR USE IN ACCORDANCE WITH ICC-ES AC308 FOR CRACKED AND UNCRACKED CONCRETE RECOGNITION. PRE-APPROVED ADHESIVE ANCHORS INCLUDE:
      a. SIMPSON STRONG-TIE "SET-XP" (ICC-ES ESR-2508) OR HILTI "HIT-RE 500-SD" (ICC-ES ESR-2322)

6. PER IBC SECTION 1705, SPECIAL INSPECTION IS REQUIRED FOR THE FOLLOWING ITEMS:
   A. CONCRETE:
   (1) DURING THE TAKING ON TEST SPECIMENS.
   (2) DURING THE PLACEMENT OF ALL REINFORCED CONCRETE.
   B. BOLTS IN CONCRETE:
   (1) DURING THE PLACEMENT OF CONCRETE AROUND BOLTS.
   C. REINFORCING STEEL (PERIODIC):
   (1) DURING THE PLACEMENT OF REINFORCING STEEL FOR ALL CONCRETE REQUIRED TO HAVE SPECIAL INSPECTION NOTED ABOVE.
   D. WELDING:
   (1) VISUAL INSPECTION OF ALL FIELD WELDS.
   (2) NON-DESTRUCTIVE TESTING OF ALL COMPLETE PENETRATION WELDS.
   E. HIGH STRENGTH BOLTING:
   (1) VERIFICATION OF SNUG TIGHT BOLT INSTALLATION FOR A325N BOLTS.
   (2) VERIFICATION OF SLIP CRITICAL (SC) BOLTS AT ALL BRACED FRAMES.
   F. EXPANSION AND EPOXY BOLTS:
   (1) DURING THE PLACEMENT OF ALL EXPANSION AND EPOXY BOLTS, FOR VISUAL VERIFICATION OF HOLE DIAMETER AND DEPTH AND PLACEMENT OF BOLT AND/OR EPOXY.
   G. DUTIES AND RESPONSIBILITIES OF THE SPECIAL INSPECTOR:
   (1) THE SPECIAL INSPECTOR SHALL OBSERVE THE WORK ASSIGNED TO BE CERTAIN IT CONFORMS WITH THE APPROVED DESIGN DRAWINGS AND SPECIFICATION.
   (2) THE SPECIAL INSPECTOR SHALL FURNISH INSPECTION REPORTS TO THE BUILDING OFFICIAL, AND TO THE ENGINEER OF RECORD.
   H. SPECIAL INSPECTOR IS TO BE HIRED BY OWNER, NOT CONTRACTOR.

COPYRIGHT 2021 MODULUS ARCHITECTS
C:\Revit Local Files\Modulus - Tesla Englewood CO RVT2024\Tesla Englewood_Structural Kenv Local.RVT 2024.rvt
2/12/2024 3:55:06 PM
TESLA COLLISION CENTER

MODULUS
ARCHITECTS
AND LAND USE
PLANNING
8220 SAN PEDRO DR NE
SUITE 520
ALBUQUERQUE, NEW
MEXICO 87113
PHONE (505) 338-1499
FAX (505) 338-1498

Walla ENGINEERING LTD
Structural Engineering
Civil Engineering
6501 Americas Parkway NE • Suite 301
Albuquerque • New Mexico • 87110
881-3008 • Facsimile 881-4025

COLORADO REGISTERED PROFESSIONAL ENGINEER MIKE J. WALLA 30711

PROJECT TITLE

TESLA COLLISION CENTER

6951
S. BLACKHAWK
STREET,
BUILDING 1,
CENTENIAL CO
80112

PROJECT MANAGER

DRAWN BY:

ISSUE / REVISION

SHEET TITLE

GENERAL STRUCTURAL NOTES

SCALE:

JOB NO.

SHEET NUMBER

S0

SCHEDULE OF STRUCTURAL SPECIAL INSPECTIONS

1. SPECIAL INSPECTIONS / TESTING - "SPECIAL STRUCTURAL INSPECTION" SHALL NOT RELIEVE THE OWNER OR THEIR AGENT FROM REQUESTING THE JURISDICTION BUILDING DEPARTMENT INSPECTIONS REQUIRED BY SECTION 110 OF THE IBC.
2. REPORTING FOR SPECIAL INSPECTION - SPECIAL INSPECTION AND TESTING REPORTS SHALL BE COMPLETED AND DISTRIBUTED AT THE COMPLETION OF EACH TASK. IF A TASK IS TO TAKE LONGER THAN (3) DAYS, PROVIDE REPORTS FOR EACH DAY. PROVIDE COPIES OF REPORTS TO: CONTRACTOR, OWNER, ARCHITECT AND STRUCTURAL ENGINEER OF RECORD. SPECIAL INSPECTOR TO KEEP A NON-COMPLIANCE LIST DOCUMENTING ITEMS INSPECTED NOT MEETING APPROVED CONSTRUCTION DOCUMENTS AND WHEN / HOW RESOLVED.
3. SEE ARCHITECTURAL, MECHANICAL, ELECTRICAL, AND PLUMBING CONSTRUCTION DOCUMENTS FOR ADDITIONAL NON-STRUCTURAL SPECIAL INSPECTION ITEMS.

IN ACCORDANCE WITH IBC CHAPTER 17, THE FOLLOWING TYPES OF WORK REQUIRE SPECIAL INSPECTIONS AND TESTING:

SPECIAL INSPECTION AND VERIFICATION OF CONCRETE CONSTRUCTION

SPECIAL INSPECTION REQUIRED Y/N	VERIFICATION AND INSPECTION	FREQUENCY OF INSPECTION		REFERENCE FOR CRITERIA	
		CONTINUOUS DURING TASK LISTED	PERIODICALLY DURING TASK LISTED	IBC SECTION	REFERENCED STANDARD
Y	1. INSPECT REINFORCEMENT, INCLUDING PRESTRESSING TENDONS, AND VERIFY PLACEMENT.	—	X	1908.4	ACI 318: CH. 20, 25.2, 25.3, 26.6.1-26.6.3
	2. REINFORCING BAR WELDING:				
N	a. VERIFY WELDABILITY OF REINFORCING BARS OTHER THAN ASTM A706,	—	X	—	AWS D1.4 ACI 318: 26.6.4
N	b. INSPECT SINGLE-PASS FILLET WELDS, MAXIMUM 5/16", AND	X	X		
N	c. INSPECT ALL OTHER WELDS.	X	X		
Y	3. INSPECT ANCHORS CAST IN CONCRETE.	—	X	—	ACI 318: 17.8.2
Y	4. INSPECT ANCHORS POST-INSTALLED IN HARDENED CONCRETE MEMBERS. a. ADHESIVE ANCHORS INSTALLED IN HORIZONTALLY OR UPWARDLY INCLINED ORIENTATIONS TO RESIST SUSTAINED TENSION LOADS. b. MECHANICAL ANCHORS AND ADHESIVE ANCHORS NOT DEFINED IN 4.a.	X	X	—	ACI 318: 17.8.2.4 ACI 318: 17.8.2
Y	5. VERIFYING USE OF REQUIRED DESIGN MIX.	—	X	1904.1, 1904.2, 1908.2, 1908.3	ACI 318: CH. 19, 26.4.3, 26.4.4
Y	6. PRIOR TO CONCRETE PLACEMENT, FABRICATE SPECIMENS FOR STRENGTH TESTS, PERFORM SLUMP AND AIR CONTENT TEST, AND DETERMINE THE TEMPERATURE OF THE CONCRETE.	X	—	1908.10	ASTM C172 ASTM C31 ACI 318: 26.4, 26.12
Y	7. INSPECT CONCRETE AND SHOTCRETE PLACEMENT FOR PROPER APPLICATION TECHNIQUES.	X	—	1908.6, 1908.7 1908.8	ACI 318: 26.5
Y	8. VERIFY MAINTENANCE OF SPECIFIED CURING TEMPERATURE AND TECHNIQUES.	—	X	1908.9	ACI 318: 26.5.3 -26.5.5
	2. INSPECT PRESTRESSED CONCRETE FOR:				
N	a. APPLICATION OF PRESTRESSING FORCES, AND	X	—	—	ACI 318: 26.10
N	b. GROUTING OF BONDED PRESTRESSED TENDONS.	X	—		
N	10. INSPECT ERECTION OF PRECAST CONCRETE MEMBERS.	—	X	—	ACI 318: 26.8
N	11. VERIFY IN-SITU CONCRETE STRENGTH, PRIOR TO STRESSING OF TENDONS IN POST-TENSIONED CONCRETE AND PRIOR TO REMOVAL OF SHORES AND FORMS FROM BEAMS AND STRUCTURAL SLABS.	—	X	—	ACI 318: 26.11.2
Y	12. INSPECT FORMWORK FOR SHAPE, LOCATION AND DIMENSIONS OF THE CONCRETE MEMBER BEING FORMED.	—	X	—	ACI 318: 26.11.1.2(b)

SPECIAL INSPECTION AND VERIFICATION OF STEEL CONSTRUCTION

SPECIAL INSPECTION REQUIRED Y/N	VERIFICATION AND INSPECTION	FREQUENCY OF INSPECTION		REFERENCE FOR CRITERIA	
		CONTINUOUS DURING TASK LISTED	PERIODICALLY DURING TASK LISTED	IBC SECTION	REFERENCED STANDARD
	1. MATERIAL VERIFICATION OF HIGH-STRENGTH BOLTS, NUTS AND WASHERS:				
Y	a. IDENTIFICATION MARKINGS TO CONFORM TO ASTM STANDARDS SPECIFIED IN THE APPROVED CONSTRUCTION DOCUMENTS.	—	X	—	APPLICABLE ASTM MATERIAL SPECIFICATIONS; AISC 360 SECTION A3.3
Y	b. MANUFACTURER'S CERTIFICATE OF COMPLIANCE REQUIRED.	—	X	—	—
	2. INSPECTION OF HIGH-STRENGTH BOLTING:				
Y	a. SNUG-TIGHT JOINTS	—	X	1705.2.1	AISC 360, SECTION M2.5
Y	b. PRETENSIONED AND SLIP CRITICAL JOINTS USING TURN-OF-NUT WITH MATCHMARKING, TWIST-OFF BOLT OR DIRECT TENSION INDICATOR METHODS OF INSTALLATION	—	X		
Y	c. PRETENSIONED AND SLIP CRITICAL JOINTS USING TURN-OF-NUT WITHOUT MATCHMARKING OR CALIBRATED WRENCH METHODS OF INSTALLATION	X	—		
	3. MATERIAL VERIFICATION OF STRUCTURAL STEEL AND COLD-FORMED STEEL DECK:				
Y	a. FOR STRUCTURAL STEEL, IDENTIFICATION MARKINGS TO CONFORM TO AISC 360	—	X		AISC 360 SECTION M5.5
Y	b. FOR OTHER STEEL, IDENTIFICATION MARKINGS TO CONFORM TO ASTM STANDARDS SPECIFIED IN THE APPROVED CONSTRUCTION DOCUMENTS	—	X		APPLICABLE ASTM MATERIAL STANDARDS
Y	c. MANUFACTURERS CERTIFIED TEST REPORTS	—	X		
	4. MATERIAL VERIFICATION OF WELD FILLER MATERIALS:				
Y	a. IDENTIFICATION MARKINGS TO CONFORM TO AWS SPECIFICATION IN THE APPROVED CONSTRUCTION DOCUMENTS.	—	—	—	AISC 360, SECTION A3.5
Y	b. MANUFACTURER'S CERTIFICATE OF COMPLIANCE REQUIRED.	—	—	—	—
	5. INSPECTION OF WELDING: a. STRUCTURAL STEEL :				
Y	1) COMPLETE AND PARTIAL PENETRATION GROOVE WELDS.	X	—	1705.2	AWS D1.1
N	2) MULTIPASS FILLET WELDS.	X	—		
N	3) SINGLE-PASS FILLET WELDS > 5/16"	X	—		
Y	4) PLUG & SLOT WELDS	X	—		
Y	5) SINGLE-PASS FILLET WELDS < 5/16"	—	X		
N	6) ROOF DECK WELDS.	—	X	—	AWS D1.3
N	b. REINFORCING STEEL:	—	—	—	AWS D1.4 ACI 318 3.5.2
N	1) VERIFICATION OF WELDABILITY OF REINFORCING STEEL OTHER THAN ASTM A 706.	—	X		
N	2) REINFORCING STEEL-RESISTING FLEXURAL AND AXIAL FORCES IN INTERMEDIATE AND SPECIAL MOMENT FRAMES, AND BOUNDARY ELEMENTS OF SPECIAL REINFORCED CONCRETE SHEAR WALLS AND SHEAR REINFORCEMENT.	X	—		
Y	3) SHEAR REINFORCEMENT.	X	—		
Y	4) OTHER REINFORCING STEEL.	—	X		
	6. INSPECTION OF STEEL FRAME JOINT DETAIL FOR COMPLIANCE WITH APPROVED CONSTRUCTION DOCUMENTS:				
N	a. DETAILS SUCH AS BRACING AND STIFFENING.	—	X	1705.1.1	—
Y	b. MEMBER LOCATIONS.	—	X		
Y	c. APPLICATION OF JOINT DETAILS AT EACH CONNECTION.	—	X		

SPECIAL INSPECTION AND VERIFICATION OF SOILS

SPECIAL INSPECTION REQUIRED Y/N	VERIFICATION AND INSPECTION TASK	CONTINUOUS DURING TASK LISTED	PERIODICALLY DURING TASK LISTED	IBC REFERENCE
Y	1. VERIFY MATERIALS BELOW FOOTINGS ARE ADEQUATE TO ACHIEVE THE DESIGN BEARING CAPACITY.	—	X	1705.6
Y	2. VERIFY EXCAVATIONS ARE EXTENDED TO PROPER DEPTH AND HAVE REACHED PROPER MATERIAL.	—	X	1705.6
Y	3. PERFORM CLASSIFICATION AND TESTING OF CONTROLLED FILL MATERIALS.	—	X	1705.6
Y	4. VERIFY USE OF PROPER MATERIALS, DENSITIES AND LIFT THICKNESS DURING PLACEMENT AND COMPACTION OF CONTROLLED FILL.	X	—	1705.6
Y	5. PRIOR TO PLACEMENT OF CONTROLLED FILL, INSPECT SUBGRADE AND VERIFY THAT SITE HAS BEEN PREPARED PROPERLY.	—	X	1705.6

COPYRIGHT 2021 MODULUS ARCHITECTS
C:\Revit Local Files\Modulus - Tesla Englewood CO RVT2024\Tesla Englewood_Structural Kenv Local.RVT 2024.rvt
2/12/2024 3:55:07 PM
TESLA COLLISION CENTER

MODULUS ARCHITECTS AND LAND USE PLANNING
8220 SAN PEDRO DR NE
SUITE 520
ALBUQUERQUE, NEW MEXICO 87113
PHONE (505) 338-1499
FAX (505) 338-1498

Walla Engineering LTD
Structural Engineering
Civil Engineering
6501 Americas Parkway NE • Suite 301
Albuquerque • New Mexico • 87110
881-3008 • Facsimile 881-4025

COLORADO REGISTERED MIKE J. WALLA 30711

PROJECT TITLE

TESLA COLLISION CENTER

6951
S. BLACKHAWK
STREET,
BUILDING 1,
CENTENIAL CO
80112

PROJECT MANAGER

DRAWN BY:

ISSUE / REVISION

SHEET TITLE

SPECIAL INSPECTIONS

SCALE:

JOB NO.

SHEET NUMBER

S01

COPYRIGHT 2021 MODULUS ARCHITECTS

C:\Revit Local Files\Modulus - Tesla Englewood CO RVT2024\Tesla Englewood_Structural Kenv Local.RVT 2024.rvt
2/12/2024 3:55:08 PM
TESLA COLLISION CENTER

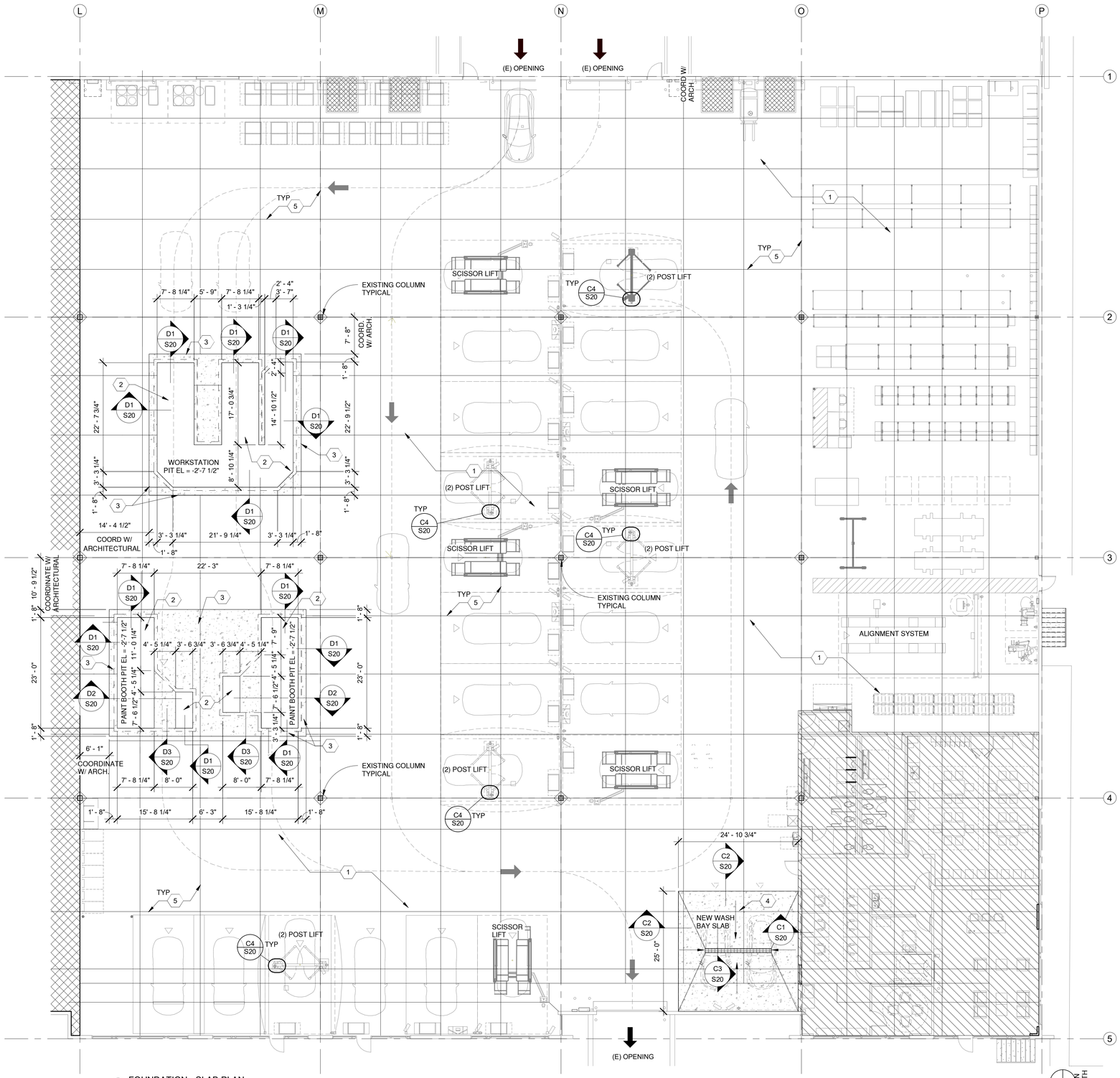

A1 FOUNDATION - SLAB PLAN
3/32" = 1'-0"

GENERAL NOTES

A. THE CONTRACTOR IS RESPONSIBLE TO PROVIDE ADEQUATE SHORING OF EXISTING STRUCTURE PRIOR TO ANY REMOVALS.

B. EXISTING CONDITIONS ARE TO BE FIELD VERIFIED.

C. SEE ARCHITECTURAL FOR EXACT LOCATION OF PAINT BOOTH PIT, WORKSTATION PIT AND WASH BAY SIZE AND LOCATION.

D. FOR ALL OF THESE DIFFERENT SHELVING TYPES A SIMPSON 1/4"x2 1/4" MINIMUM EMBED DEPTH TITEN ANCHOR OR A 3/8" DIA. x 3" (2 1/2" MIN. EMBEDMENT) HILTI KBTZ EXPANSION ANCHOR IS ACCEPTABLE AT THE BASE PLATE OF EACH LEG OF EACH SHELVING UNITS.

KEYED NOTES

1 EXISTING CONCRETE SLAB ON GRADE.

2 8" THICK CONCRETE PIT SLAB REINFORCED WITH #5 AT 12" OC EACH WAY IN CENTER OF SLAB. TOP OF SLAB ELEVATION = -2'-7 1/2".

3 EXTENT OF EXISTING CONCRETE SLAB DEMOLITION AND REPLACEMENT WITH NEW 8" THICK CONCRETE PIT SLAB AND NEW 6" THICK CONCRETE SLAB ON GRADE REINFORCED WITH #5 AT 12" OC EACH WAY IN CENTER OF SLAB.

4 EXTENT OF EXISTING CONCRETE SLAB DEMOLITION AND REPLACEMENT WITH NEW 6" THICK CONCRETE WASH BAY SLAB REINFORCED WITH #4 AT 16" OC EACH WAY IN CENTER OF SLAB. SLOPE SLAB TO TRENCH DRAIN PER ARCHITECTURAL.

5 EXISTING SLAB CONTROL JOINTS FIELD VERIFY SPACING. EXTEND / CONTINUE SLAB CONTROL JOINTS IN NEW CONCRETE SLAB ON GRADE.

SLAB PLAN BASIS OF DESIGN:

A. 125 PSF UNIFORM LOAD.
B. POST LOAD: 12 KPS, 12"x12" BASE PLATE. LOCATE POSTS A MINIMUM OF 3'-0" AWAY FROM EDGES OR JOINT UNO.
C. (2) POST LIFT - CHALLENGER VLE10:
   - LIFT WEIGHT = 1,750 LBS
   - MAX. CAPACITY = 10,000 LBS
   - ECCENTRICITY = 15.5"
D. SCISSOR LIFT - CHALLENGER DX77:
   - MAX. CAPACITY = 3,850 LBS
   - SERVICE WEIGHT = 7,700 LBS
E. ALIGNMENT RACK - HUNTER RX10KPS:
   - MAX. CAPACITY = 10,000 LBS
F. FORKLIFT - HANGCHA SERIES FB30C:
   - MAX. CAPACITY = 6,000 LBS
   - SERVICE WEIGHT = 10,695 LBS
   - MAX. FRONT AXLE LOAD = 15,212 LBS

EQUIPMENT NOTES:

1. COORDINATE LOCATION OF EQUIPMENT WITH ARCHITECTURAL DRAWINGS.
2. SEE SHEET S20 FOR (2) POST LIFT TYPICAL BASE DETAILS AND MINIMUM DISTANCE TO CONTROL JOINTS AND CRACKS.

MODULUS
ARCHITECTS
AND LAND USE
PLANNING
8220 SAN PEDRO DR NE
SUITE 520
ALBUQUERQUE, NEW
MEXICO 87113
PHONE (505) 338-1499
FAX (505) 338-1498

Walla Engineering Ltd
Structural Engineering
Civil Engineering
6501 Americas Parkway NE • Suite 301
Albuquerque • New Mexico • 87110
881-3008 • Facsimile 881-4025

COLORADO REGISTERED
MICHAEL J. WALLA
30711
12/12/24

PROJECT TITLE

TESLA COLLISION CENTER

6951
S. BLACKHAWK
STREET,
BUILDING 1,
CENTENIAL CO
80112

PROJECT MANAGER

DRAWN BY:

ISSUE / REVISION

SHEET TITLE

FOUNDATION - SLAB PLAN

SCALE:

JOB NO.

SHEET NUMBER

S1

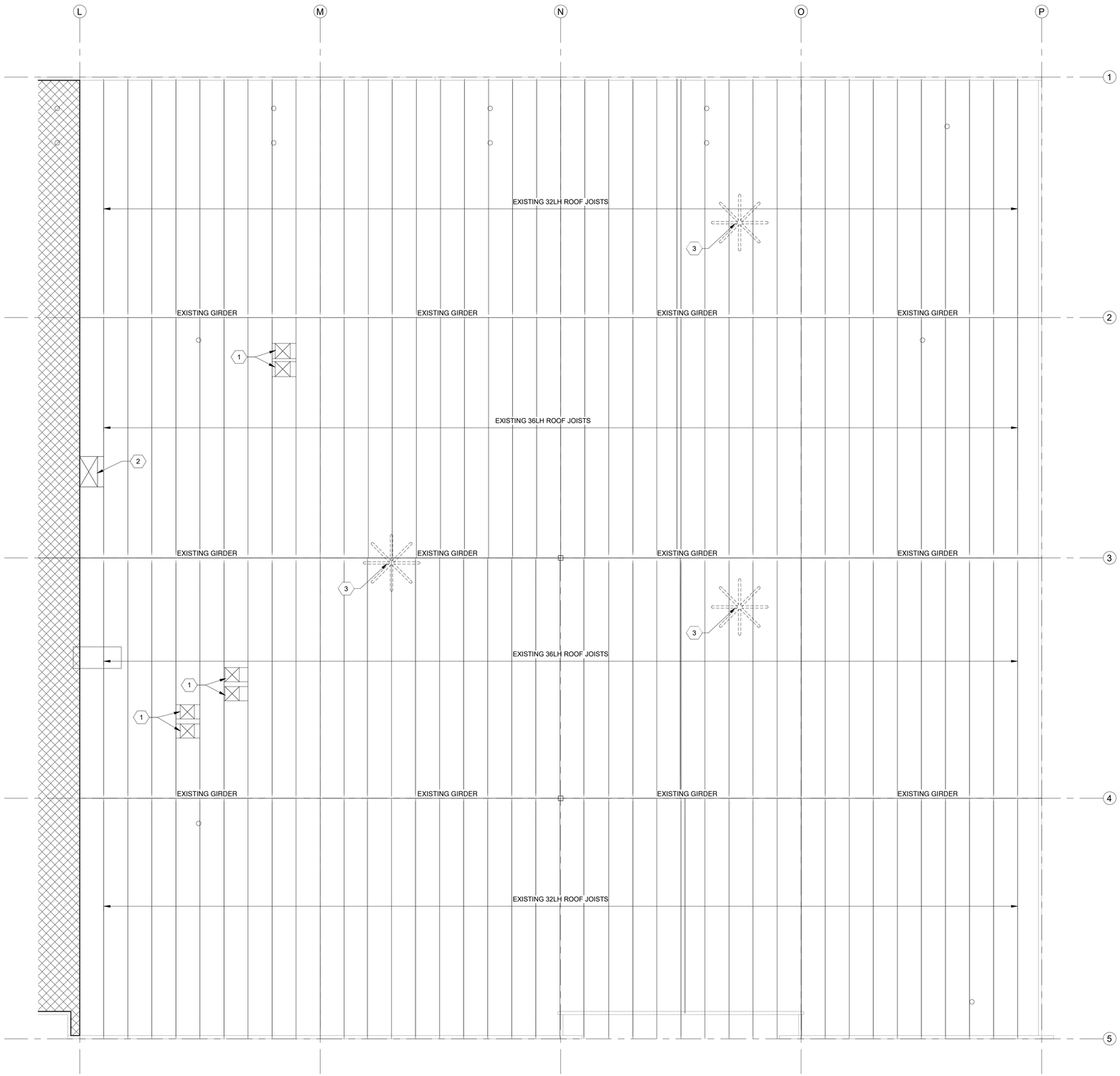

A1 ROOF FRAMING PLAN
3/32" = 1'-0"

PLAN NORTH

GENERAL NOTES

A. THE CONTRACTOR IS RESPONSIBLE TO PROVIDE ADEQUATE SHORING OF EXISTING STRUCTURE PRIOR TO ANY REMOVALS.

B. EXISTING CONDITIONS ARE TO BE FIELD VERIFIED.

KEYED NOTES

1 NEW ROOF OPENINGS FOR PAINTBOOTH HVAC - COORDINATE SIZE AND LOCATION WITH ARCHITECTURAL AND PAINTBOOTH MANUFACTURE - FRAME OPENING WITH "QUICKFRAME" (https://www.quickframes.com). SEE SECTION B1/S20.

2 NEW ROOF OPENING FOR ROOF HATCH - COORDINATE SIZE AND LOCATION WITH ARCHITECTURAL - FRAME OPENING WITH "QUICKFRAME" (https://www.quickframes.com). SEE SECTION B1/S2.

3 NEW LARGE ROOF FAN, SEE ARCHITECTURAL FOR EXACT LOCATION. REFERENCE B2/S20 FOR ROOF FAN SUPPORT DETAIL.

TESLA

MODULUS ARCHITECTS AND LAND USE PLANNING
8220 SAN PEDRO DR NE
SUITE 520
ALBUQUERQUE, NEW MEXICO 87113
PHONE (505) 338-1499
FAX (505) 338-1498

Walla ENGINEERING LTD
Structural Engineering
Civil Engineering
6501 Americas Parkway NE • Suite 301
Albuquerque • New Mexico • 87110
881-3008 • Facsimile 881-4025

COLORADO REGISTERED MIKE J. WALLA 30711 PROFESSIONAL ENGINEER
2/12/24

PROJECT TITLE

TESLA COLLISION CENTER

6951
S. BLACKHAWK
STREET,
BUILDING 1,
CENTENIAL CO
80112

PROJECT MANAGER

DRAWN BY:

ISSUE / REVISION

SHEET TITLE

ROOF FRAMING PLAN

SCALE:

JOB NO.

SHEET NUMBER

S2

COPYRIGHT 2021 MODULUS ARCHITECTS
C:\Revit Local Files\Modulus - Tesla Englewood CO RVT2024\Tesla Englewood_Structural Kenv Local RVT 2024.rvt
2/12/2024 3:55:08 PM
TESLA COLLISION CENTER

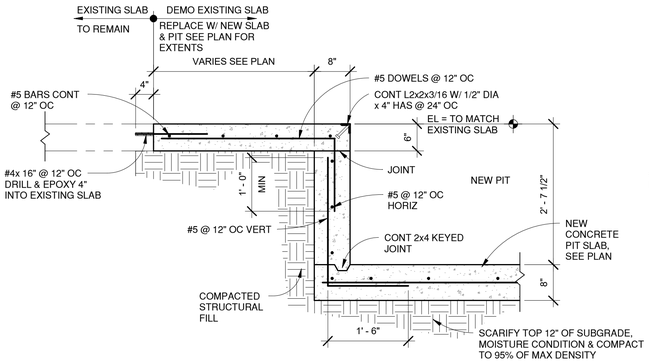

D1 SECTION AT PIT
3/4" = 1'-0"

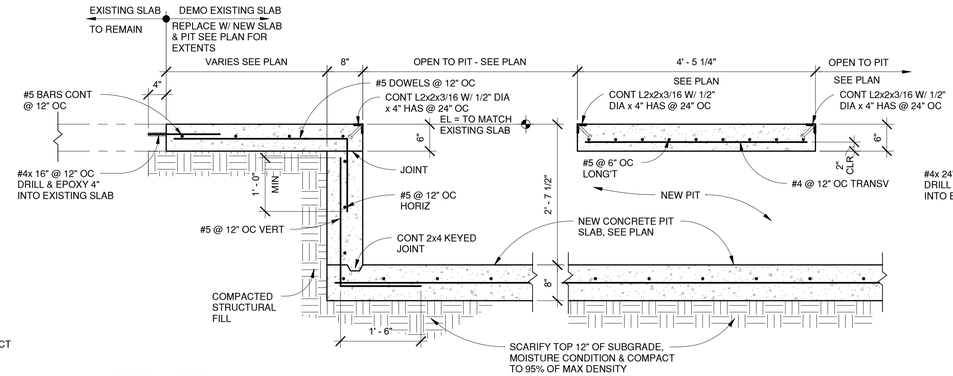

D2 SECTION AT PIT
3/4" = 1'-0"

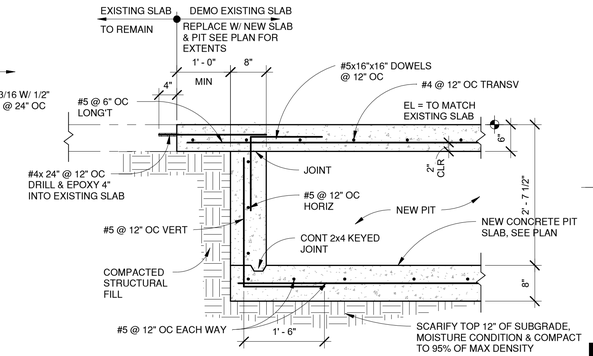

D3 SECTION AT PIT
3/4" = 1'-0"

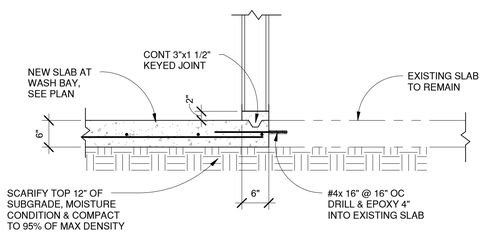

C1 WASH BAY CURB SECTION
3/4" = 1'-0"

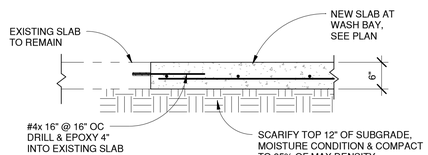

C2 WASH BAY SECTION
3/4" = 1'-0"

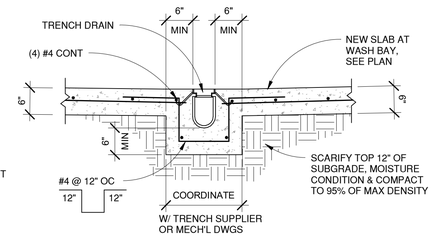

C3 WASH BAY TRENCH DRAIN SECTION
3/4" = 1'-0"

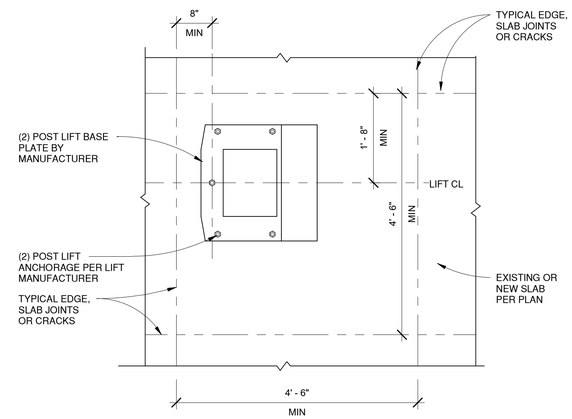

PLAN VIEW A-A

B1 SECTION @ NEW ROOF OPENING TYP
3/4" = 1'-0"

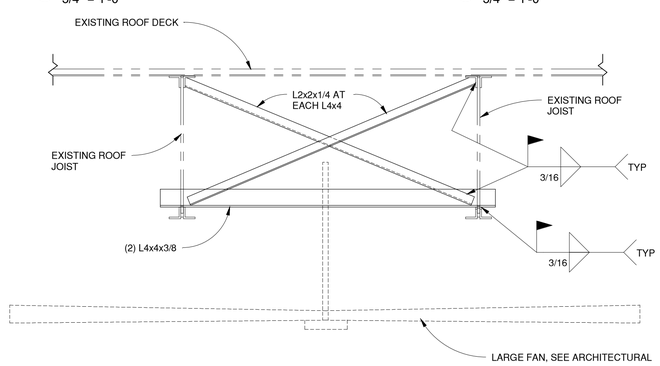

B2 ROOF FAN SUPPORT
3/4" = 1'-0"

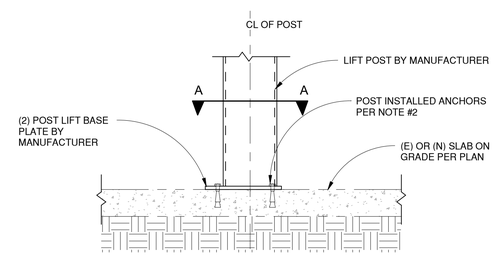

NOTES:
1. ALTERNATIVELY, PROVIDE 3/4" DIA. F1554 GR36 EPOXY ANCHORS W/ 4" EMBED.
2. ANCHORS SHALL BE 8" MIN. AWAY FROM EDGE OF SLAB, CONTROL JOINTS OR CRACKS.
3. LIFT CENTERLINE SHALL BE 1'-8" MIN. AWAY FROM EDGE OF SLAB, CONTROL JOINTS OR CRACKS.

C4 TYPICAL LIFT POST BASE AT SLAB ON GRADE
3/4" = 1'-0"

MODULUS
ARCHITECTS
AND LAND USE
PLANNING
8220 SAN PEDRO DR NE
SUITE 520
ALBUQUERQUE, NEW
MEXICO 87113
PHONE (505) 338-1499
FAX (505) 338-1498

Walla ENGINEERING LTD.
Structural Engineering
Civil Engineering
6501 Americas Parkway NE • Suite 301
Albuquerque • New Mexico • 87110
881-3008 • Facsimile 881-4025

COLORADO REGISTERED PROFESSIONAL ENGINEER MIKE J. WALLA 30711
2/12/24

PROJECT TITLE

TESLA COLLISION CENTER

6951
S. BLACKHAWK
STREET,
BUILDING 1,
CENTENIAL CO
80112

PROJECT MANAGER

DRAWN BY:

ISSUE / REVISION

SHEET TITLE

SECTIONS & DETAILS

SCALE:

JOB NO.

SHEET NUMBER

S20

COPYRIGHT 2021 MODULUS ARCHITECTS
2/12/2024 3:55:08 PM C:\Revit Local Files\Modulus - Tesla Englewood CO RVT2024\Tesla Englewood_Structural Kenv Local.RVT 2024.rvt
TESLA COLLISION CENTER

COPYRIGHT 2021 MODULUS ARCHITECTS

ELECTRICAL SYMBOL LEGEND

SYMBOL	DESCRIPTION
	CEILING OUTLET AND SURFACE MOUNTED FIXTURE
	WALL OUTLET AND SURFACE MOUNTED FIXTURE
	CEILING OUTLET AND RECESSED FIXTURE
	WALL OUTLET AND RECESSED FIXTURE
	PENDANT MOUNT FIXTURE
	TRACK LIGHT WITH FIXTURES AS INDICATED
	POLE MOUNTED FIXTURE
	ARROW INDICATES BEAM DIRECTION
	LED OUTLET AND FIXTURE
	CEILING OUTLET AND FIXTURE FED FROM EMERGENCY SOURCE
	WALL OUTLET AND FIXTURE FED FROM EMERGENCY SOURCE
	LED OUTLET AND FIXTURE FED FROM EMERGENCY SOURCE
	WALL MOUNTED EGRESS LIGHTING BATTERY PACK
	CEILING MOUNTED EGRESS LIGHTING BATTERY PACK
	EXIT SIGN WITH ARROWS AS INDICATED. SHADED QUADRANT OR QUADRANTS INDICATE EXIT SIGN FACE OR FACES, WHICH WAY IT IS FACING, AND WHETHER IT IS SINGLE FACED OR DOUBLE FACED. (⊢) INDICATES WALL MOUNT. NO (⊢) INDICATES CEILING MOUNT
	COMBINATION EXIT SIGN WITH (2) AIMABLE HEADS FOR EGRESS LIGHTING. (⊢) INDICATES WALL MOUNT. NO (⊢) INDICATES CEILING MOUNT
	SINGLE POLE SWITCH, FLUSH MOUNTED 48" A.F.F.
3	THREE WAY SWITCH, FLUSH MOUNTED 48" A.F.F.
4	FOUR WAY SWITCH, FLUSH MOUNTED 48" A.F.F.
D	SINGLE POLE SLIDE-TO-OFF INCANDESCENT DIMMING CONTROLLER, LUTRON #N-600 OR APPROVED EQUAL, FLUSH MOUNTED 48" A.F.F.
T	THERMAL SWITCH, WEATHERPROOF IF INSTALLED OUTSIDE, MOUNTING VARIES
EC	EVAPORATIVE COOLER SWITCH, ONE "HI-OFF-LOW" FOR FAN AND ONE "ON-OFF" FOR PUMP. FURNISH WITH ENGRAVED NAMEPLATE. FLUSH MOUNTED 48" A.F.F.
K	KEYED SWITCH, FLUSH MOUNTED 48" A.F.F.
M	MOMENTARY SWITCH, FLUSH MOUNTED 48" A.F.F.
P	SWITCH WITH PILOT LIGHT, FLUSH MOUNTED 48" A.F.F.
	DUPLEX/QUADPLEX CONVENIENCE OUTLET, FLUSH MOUNTED 18" A.F.F.
	DUPLEX/QUAPLEX CONVENIENCE OUTLET, FED FROM EMERGENCY POWER SOURCE, FLUSH MOUNTED 18" A.F.F.
WP WP	WEATHERPROOF DUPLEX/QUADPLEX CONVENIENCE OUTLET, FLUSH MOUNTED 18" A.F.F.
GFCI GFCI	DUPLEX/QUADPLEX CONVENIENCE OUTLET, GROUND FAULT CIRCUIT INTERRUPTER, FLUSH MOUNTED 18" A.F.F.
S S	DUPLEX/QUADPLEX CONVENIENCE OUTLET, SAFETY TYPE, FLUSH MOUNTED 18" A.F.F.
	SPLIT DUPLEX CONVENIENCE OUTLET, TOP HALF (ONLY) SHALL BE SWITCHED, FLUSH MOUNTED 18" A.F.F.
	PUSH-BUTTON, FLUSH MOUNTED 48" A.F.F.
	SIMPLEX CONVENIENCE OUTLET, FLUSH MOUNTED 18" A.F.F.
	FLUSH CEILING MOUNTED CONVENIENCE OUTLETS, SIMPLEX/DUPLEX/QUADPLEX RESPECTIVELY
	FLUSH FLOOR MOUNTED CONVENIENCE OUTLETS, SIMPLEX/DUPLEX/QUADPLEX RESPECTIVELY
	SPECIAL PURPOSE RECEPTACLE, AS NOTED ON PLANS, FLUSH MOUNTED 18" A.F.F.
	SPECIAL PURPOSE FLUSH CEILING MOUNTED RECEPTACLE, AS NOTED ON PLANS
	SPECIAL PURPOSE FLUSH FLOOR MOUNTED RECEPTACLE, AS NOTED ON PLANS
J	JUNCTION BOX FLUSH IN WALL, HEIGHT AS INDICATED ON DRAWINGS, WITH CONNECTION TO EQUIPMENT
J	JUNCTION BOX INSTALLED ABOVE LAY-IN CEILING (OR NEAR CEILING ACCESS PANEL) WITH CONNECTION TO EQUIPMENT OR FIXTURE(S) AS SHOWN
	FLUSH FLOOR MOUNTED JUNCTION BOX
	CONCEALED BRANCH CIRCUIT WITH CONDUCTORS AS INDICATED. NEUTRAL, HOT, SWITCH LEG AND GROUND RESPECTIVELY
	BRANCH CIRCUIT OR CONDUIT INSTALLED UNDERGROUND OR UNDER FLOOR
P2-2,4	HOMERUN TO PANELBOARD WITH BRANCH CIRCUIT NUMBERS INDICATED

ELECTRICAL SYMBOL LEGEND

SYMBOL	DESCRIPTION
	TELEPHONE OUTLET, 2 GANG BOX WITH SINGLE GANG MUD RING, FLUSH MOUNTED 18" A.F.F. 3/4" CONDUIT TO TELEPHONE TERMINAL BOARD
	DATA OUTLET, 2 GANG BOX WITH SINGLE GANG MUD RING, FLUSH MOUNTED 18" A.F.F. 3/4" CONDUIT TO TELEPHONE TERMINAL BOARD
	VOICE/DATA OUTLET, 2 GANG BOX WITH SINGLE GANG MUD RING, FLUSH MOUNTED 18" A.F.F. 3/4" CONDUIT TO TELEPHONE OR DATA TERMINAL BOARD
	TELEPHONE OUTLET FLUSH CEILING MOUNTED. 3/4" CONDUIT TO TELEPHONE TERMINAL BOARD
	VOICE/DATA OUTLET FLUSH CEILING MOUNTED. 3/4" CONDUIT TO TELEPHONE OR DATA TERMINAL BOARD
	TELEPHONE OUTLET FLUSH IN FLOOR. 3/4" CONDUIT TO TELEPHONE TERMINAL BOARD
	VOICE/DATA OUTLET FLUSH IN FLOOR. 3/4" CONDUIT TO TELEPHONE OR DATA TERMINAL BOARD
TV	TELEVISION OUTLET FLUSH IN WALL, 18" A.F.F. 3/4" CONDUIT WITH PULLCORD STUBBED INTO ACCESSIBLE CEILING SPACE
TV	TELEVISION OUTLET FLUSH IN FLOOR. 3/4" CONDUIT WITH PULLCORD STUBBED INTO ACCESSIBLE CEILING SPACE
TV	TELEVISION OUTLET FLUSH IN CEILING. 3/4" CONDUIT WITH PULLCORD STUBBED INTO ACCESSIBLE CEILING SPACE
TV	COMBINATION DUPLEX RECEPTACLE/TELEVISION OUTLET FLUSH IN WALL, +80" A.F.F. 3/4" CONDUIT WITH PULLCORD STUBBED INTO ACCESSIBLE CEILING SPACE
TV	COMBINATION DUPLEX RECEPTACLE/TELEVISION OUTLET FLUSH IN FLOOR. 3/4" CONDUIT WITH PULLSTRING INTO ACCESSIBLE CEILING SPACE
TV	COMBINATION DUPLEX RECEPTACLE/TELEVISION OUTLET FLUSH IN CEILING. 3/4" CONDUIT WITH PULLSTRING INTO ACCESSIBLE CEILING SPACE
S S	WALL/CEILING FLUSH MOUNTED SPEAKER, WALL HEIGHT VARIES
M M	WALL/CEILING/FLOOR FLUSH MOUNTED MICROPHONE OUTLET, WALL HEIGHT 18" A.F.F.
F	FIRE ALARM MANUAL PULLSTATION, 48" A.F.F.
	FIRE ALARM AUDIO/VISUAL DEVICE, 80" A.F.F.
	FIRE ALARM VISUAL DEVICE, 80" A.F.F.
	FIRE ALARM AUDIO DEVICE, 80" A.F.F.
CLG CLG CLG	CEILING MOUNTED FIRE ALARM DEVICE (AUDIO/VISUAL) / VISUAL / AUDIO RESPECTIVELY
B	FIRE ALARM EVACUATION BELL, 80" A.F.F.
	FIRE ALARM REMOTE INDICATOR LIGHT, 80" A.F.F.
	WALL/CEILING MOUNTED FIRE ALARM SMOKE DETECTOR, PHOTOELECTRIC TYPE, WALL HEIGHT 80" A.F.F.
	FIRE ALARM DUCT DETECTOR, MOUNTING VARIES
HD	FIRE ALARM HEAT DETECTOR, CEILING MOUNTED
EH	FIRE ALARM ELECTROMAGNETIC DOOR HOLDER, MOUNTING VARIES
FS	FIRE ALARM FIRE/SMOKE DAMPER, MOUNTING VARIES
F	MOTOR CONNECTION FOR FRACTIONAL HP MOTOR (1/3 HP OR LESS). PROVIDE THERMAL OVERLOAD SWITCH (WEATHERPROOF IF OUTSIDE) ADJACENT TO MOTOR UNLESS SWITCH IS SHOWN ELSEWHERE ON PLANS, MOUNTING VARIES
#	MOTOR CONNECTION FOR MOTOR WITH HP INDICATED, MOUNTING VARIES
	DISCONNECT SWITCH, POLES AND RATING AS INDICATED OR AS REQUIRED, NEMA 3R IF INSTALLED OUTSIDE, MOUNTING VARIES
	COMBINATION MAGNETIC MOTOR CONTROLLER/DISCONNECT SWITCH. SIZE, POLES, FUSES AND OVERLOADS PER MOTOR SERVED, MOUNTING VARIES
	MAGNETIC MOTOR CONTROLLER, SIZE AND POLES PER MOTOR SERVED, MOUNTING VARIES
M	MAGNETIC CONTACT, SIZE AND POLES PER MOTOR FURNISHED, MOUNTING VARIES
T	TRANSFORMER, DRY TYPE, SIZE AS INDICATED, MOUNTING VARIES
RTU-1	MECHANICAL UNIT, MOUNTING VARIES
T	THERMOSTAT(M), 48" A.F.F.
	120V PANELBOARD, REFER TO PANEL SCHEDULE
	277V PANELBOARD, REFER TO PANEL SCHEDULE
	SPECIAL PURPOSE CABINET, AS INDICATED ON DRAWINGS
	3/4" PLYWOOD TELEPHONE BACKBOARD WITH TWO COATS OF GRAY INSULATING PAINT, MOUNTING VARIES

MOUNTING HEIGHT TO BE FIELD- COORDINATED BASED UPON ACTUAL EQUIPMENT SUPPLIED, SO THAT "HIGHEST" OPERABLE HANDLE OF SWITCH OR CIRCUIT BREAKER IS +6'-7" A.F.F. MAXIMUM AND "LOWEST" OPERABLE HANDLE OF SWITCH OR CIRCUIT BREAKER IS +18" A.F.F. MINIMUM

ELECTRICAL SYMBOL LEGEND

SYMBOL	DESCRIPTION
N	NURSE CALL OUTLET, MOUNTING VARIES
E	EMERGENCY CALL OUTLET, MOUNTING VARIES
DS	DUTY STATION OUTLET, 48" A.F.F.
SS	STAFF STATION OUTLET, 48" A.F.F.
B	CODE BLUE OUTLET, 48" A.F.F.
M	PATIENT MONITOR OUTLET, MOUNTING VARIES
	WALL/CEILING MOUNTED NURSE CALL DOME LIGHT, CENTERED OVER DOOR, WALL HEIGHT 96" A.F.F.
DC	INTRUSION ALARM DOOR CONTACT, MOUNTED ON DOOR FRAME/DOOR
M	INTRUSION ALARM MOTION SENSOR, ARROW INDICATES DIRECTION, MOUNTED ON WALL 3" BELOW CEILING TO TOP OF DEVICE
WC	INTRUSION ALARM WINDOW CONTACT, MOUNTED ON WINDOW FRAME/WINDOW
GB	INTRUSION ALARM GLASS BREAK SENSOR, MOUNTING VARIES
CCTV CCTV	WALL/CEILING MOUNTED CLOSED CIRCUIT CAMERA, WALL HEIGHT VARIES
KP	KEYPAD, 48" A.F.F.
C	CONTACTOR, MOUNTING VARIES
	NORMALLY OPEN CONTACT
	NORMALLY CLOSED CONTACT
OL'S	MOTOR OVERLOADS
	RED PILOT LIGHT
	GREEN PILOT LIGHT
	TRANSFORMER
R	RELAY
	SWITCH
	FUSE(S)
	CIRCUIT BREAKER
+42"	MOUNTED 42" A.F.F. TO MIDDLE OF ROUGH-IN FOR DEVICE, SEE NOTE "f" BELOW
+48"	MOUNTED 48" A.F.F. TO TOP OF DEVICE, SEE NOTE "f" BELOW
+80"	MOUNTED 80" A.F.F. TO CENTERLINE OF ROUGH-IN OF DEVICE, SEE NOTE "f" BELOW
WP	WEATHERPROOF (NEMA 3R)
EX	EXISTING
R	REMOVE
NIC	NOT IN CONTRACT
NTS	NOT TO SCALE
(M)	MECHANICAL (FURNISHED UNDER DIVISION 15)
A.F.F.	ABOVE FINISHED FLOOR
A.F.G.	ABOVE FINISHED GRADE
IG	ISOLATED GROUND
UG	UNDERGROUND
FACP	FIRE ALARM CONTROL PANEL
U.N.O.	UNLESS NOTED OTHERWISE
OFOI	OWNER FURNISHED, OWNER INSTALLED
OFCI	OWNER FURNISHED, CONTRACTOR INSTALLED

GENERAL NOTES:

a. LIGHTING FIXTURES ARE OF TYPE AS INDICATED ON LIGHT FIXTURE SCHEDULE UNLESS NOTED OTHERWISE.
b. LIGHTING FIXTURE MOUNTING HEIGHT AND METHOD IS CALLED OUT ON LIGHT FIXTURE SCHEDULE
c. MOUNTING HEIGHTS FOR DEVICES CALLED OUT AT 18" A.F.F. ARE TO THE BOTTOM OF THE DEVICE UNLESS NOTED OTHERWISE
d. MOUNTING HEIGHTS FOR DEVICES CALLED OUT AT 48" A.F.F. ARE TO THE TOP OF THE DEVICE UNLESS NOTED OTHERWISE
e. MOUNTING HEIGHTS FOR DEVICES CALLED OUT AT ANYTHING OTHER THAN 18" A.F.F. OR 48" A.F.F. ARE TO CENTERLINE OF ROUGH-IN OF DEVICE
f. ANY SPECIFIC DETAILS ABOVE (MOUNTING HEIGHTS, PART NUMBERS, CONNECTION METHODS, ETC.) MAY BE MODIFIED OR REPLACED BY INFORMATION ON PLANS, SCHEDULES, DETAILS, RISERS, ETC. DETAILS NOT SPECIFICALLY MODIFIED REMAIN AS GIVEN ABOVE.
g. NOT ALL SYMBOLS SHOWN ON THIS SYMBOL LEGEND MAY APPLY TO THIS PROJECT

TESLA

MODULUS ARCHITECTS AND LAND USE PLANNING
8220 SAN PEDRO DR NE
SUITE 520
ALBUQUERQUE, NEW MEXICO 87113
PHONE (505) 338-1499
FAX (505) 338-1498

COLORADO LICENSED
THOMAS F. RUEHLE
63540
PROFESSIONAL ENGINEER
2/13/2024
23303

PROJECT TITLE

TESLA COLLISION CENTER

6951
S.BLACKHAWK
STREET,
BUILDING 1,
CENTENIAL. CO
80112

PROJECT MANAGER

DRAWN BY:

ISSUE / REVISION

SHEET TITLE

ELECTRICAL LEGEND

SCALE:

JOB NO.

SHEET NUMBER

E0.00

THE RESPONSE GROUP, INC.
An Electrical Engineering Corporation
6705 Academy N.E. Suite B
Albuquerque, New Mexico 87109
Phone:(505) 323-7629 Fax:(505) 323-7594
E-mail: theresponsegroup@trg-inc.net

100% CDs

COPYRIGHT 2021 MODULUS ARCHITECTS

RESPONSIBILITY SCHEDULE

ITEM #	DECRIPTION	FURNISHED BY: TESLA	FURNISHED BY: TESLA VENDOR	FURNISHED BY: CONTRACTOR	INSTALLED BY: TESLA	INSTALLED BY: TESLA VENDOR	INSTALLED BY: CONTRACTOR	DOES NOT APPLY	REMARKS
1A	SERVICE ENTRANCE EQUIPMENT ('SE1', MAIN DISCONNECT SWITCH, OR SWITCHGEAR)		X				X		SEE ONE-LINE DIAGRAM FOR ADDITIONAL INFORMATION/REQUIREMENTS.
1B	MAIN DISTRIBUTION PANEL ('MDP')		X				X		SEE ONE-LINE DIAGRAM FOR ADDITIONAL INFORMATION/REQUIREMENTS.
2A	PANELBOARDS & TRANSFORMERS		X				X		SEE ONE-LINE DIAGRAM FOR ADDITIONAL INFORMATION/REQUIREMENTS.
2B	CIRCUIT BREAKERS, FUSES, SAFETY SWITCHES			X			X		CONTRACTOR TO PROVIDE/INSTALL CIRCUIT BREAKERS IN EXISTING PANELS/EQUIPMENT (WHEN APPLICABLE).
3	RECEPTACLES, ETC.			X			X		
4	LIGHTING FIXTURES (INTERIOR)		X				X		VERIFY REQUIREMENTS FOR EXISTING FIXTURES WITH TESLA'S PROJECT MANAGER (WHEN APPLICABLE).
5	LIGHTING CONTROLS		X				X		
6	WALL CONNECTORS	X					X		
7	WALL CONNECTOR PEDESTALS	X					X		
8	SUPER CHARGERS (EQUIPMENT, DC CABLE)								COMMISSIONED BY TESLA. REFER TO E3C21.0X SERIES SUPERCHARGER SHEETS FOR ADDITIONAL INFORMATION
9	TELECOM PATHWAYS, BOXES, CONDUITS			X			X		COORDINATE WITH TESLA I.T./LOW VOLTAGE INSTALLERS.
10	TELECOMMUNICATION AND LOW-VOLTAGE CABLING			X			X		LICENSED AND CERTIFIED LOW-VOLTAGE VENDOR TO PROVIDE ALL DATA/NETWORK CABLING. REFER TO E6.XX SERIES SHEETS FOR ADDITIONAL INFORMATION.
11	TELECOM DEVICES, SERVER EQUIPMENTS	X			X				
12	CEILING FAN WIRING BOXES, CONDUITS, WIRES			X			X		
13	CEILING FANS, FAN CONTROLLERS			X			X		
14	SECURITY SYSTEM		X			X			
15	FIRE ALARM SYSTEM			X			X		
16	EXTERIOR LTG., SIGNAGE		X				X		VERIFY REQUIREMENTS FOR EXISTING FIXTURES WITH TESLA'S PROJECT MANAGER (WHEN APPLICABLE).
17	ELECTRICAL WIRING PROVISION FOR MECHANICAL & PLUMBING EQUIPMENTS			X			X		
18	ALL OTHERS			X			X		

NOTE: THIS SCHEDULE DOES NOT NECESSARILY INDICATE FINANCIAL RESPONSIBILITY FOR LISTED ITEMS - COORDINATE FINANCIAL RESPONSIBILITIES WITH TESLA CONSTRUCTION MANAGER.

ELECTRICAL DEMOLITION GENERAL NOTES (WHEN APPLICABLE):

1. REFERENCE ARCHITECTURAL DRAWINGS FOR FULL EXTENT OF DEMOLITION WORK AND PHASING. NOTIFY ARCHITECT, ENGINEER AND OWNER, AS APPLICABLE, OF ANY CONFLICTS OR DISCREPANCIES BETWEEN DRAWINGS AND JOB SITE CONDITIONS PRIOR TO SUBMITTING BID.
2. COORDINATE DEMOLITION AND REMOVAL OF EXISTING ELECTRICAL EQUIPMENT AND LIGHTING SYSTEMS WITH ARCHITECTURAL PHASING DRAWING AND OWNER TO ALLOW NECESSARY SYSTEMS TO REMAIN OPERATIONAL DURING CONSTRUCTION. (NOTE: NOT ALL EXISTING/DEMOLISHED EQUIPMENT, LIGHT FIXTURES, DEVICES OR RACEWAYS WILL BE SHOWN ON THE DRAWINGS). COORDINATE ELECTRICAL REQUIREMENTS FOR REMODELED/RENOVATED SPACES WITH THE OWNER.
3. AVOID DAMAGING FACILITIES, INCLUDING EQUIPMENT, LIGHT FIXTURES AND DEVICES THAT ARE EXISTING TO REMAIN, NEW OR REUSED. REPAIR ALL DAMAGE CAUSED DURING WORK AT NO EXTRA COST TO THE OWNER.
4. DISPOSE OF ALL ELECTRICAL EQUIPMENT, LIGHT FIXTURES, AND DEVICES SHOWN TO BE REMOVED, UNLESS NOTED OTHERWISE. COORDINATE WITH THE OWNER THE ITEMS TO BE SALVAGED, AND THE LOCATION FOR STORAGE. AVOID DAMAGING SALVAGED ITEMS DURING DEMOLITION WORK AND DURING TRANSPORT TO OWNER'S DESIGNATED STORAGE LOCATION.
5. WHERE ALTERATION OF ELECTRICAL EQUIPMENT, LIGHT FIXTURES, RACEWAYS OR WIRING DEVICES AFFECTS EXISTING SURFACES/FINISHES: REPAIR/PAINT AFFECTED SURFACE TO MATCH EXISTING ADJACENT SURFACE IN ACCORDANCE WITH OWNER REQUIREMENTS. MAINTAIN FIRE RATING OF ALL FLOORS/WALLS/CEILINGS THAT ARE RATED.
6. WHERE DEMOLITION WORK INTERRUPTS ELECTRICAL CONTINUITY OF CIRCUITS THAT ARE TO REMAIN IN USE, PROVIDE NECESSARY DEVICES AND RELATED CIRCUITRY TO MAINTAIN ELECTRICAL CONTINUITY IN ACCORDANCE WITH OWNER REQUIREMENTS. RECIRCUIT REUSED ELECTRICAL EQUIPMENT, LIGHT FIXTURES AND WIRING DEVICES PREVIOUSLY POWERED FROM DEMOLISHED EQUIPMENT TO NEW OR TEMPORARY EQUIPMENT AS NEEDED.
7. COORDINATE DISCONNECTION OF POWER TO EQUIPMENT BEING DEMOLISHED/REMOVED/RELOCATED WITH OTHER TRADES PRIOR TO START OF WORK. ALL ELECTRICAL EQUIPMENT, LIGHT FIXTURES, RACEWAYS, WIRING DEVICES AND RELATED CIRCUITRY NOT BEING REUSED SHALL BE REMOVED IN ALL ACCESSIBLE AREAS AND IN FLOORS/WALLS/CEILINGS THAT ARE TO BE REMOVED, UNLESS NOTED OTHERWISE. AS ALLOWED BY OWNER, UNUSED ELECTRICAL EQUIPMENT, RACEWAYS AND RELATED CIRCUITRY THAT ARE INACCESSIBLE MAY BE ABANDONED IN PLACE AND SHALL BE PERMANENTLY DISCONNECTED FROM ALL POWER SOURCES, INSULATED FROM CONTACT WITH OTHER LIVE ELECTRICAL WIRING/DEVICES, AND IDENTIFIED AT THE TERMINATIONS AS NO LONGER BEING IN SERVICE.
8. LOW VOLTAGE CABLES/WIRING NOT BEING REUSED SHALL BE REMOVED UNLESS IDENTIFIED FOR FUTURE USE. COORDINATE REQUIREMENTS WITH OWNER. CARE SHOULD BE TAKEN DURING THE REMOVAL PROCESS TO PROTECT THE EXISTING REUSED CABLES/WIRING FROM DAMAGE.

ELECTRICAL GENERAL NOTES :

1. EXISTING CONDITIONS WERE TAKEN FROM ORIGINAL DRAWINGS AND SITE VISITS AND MAY NOT REFLECT ACTUAL "AS-BUILT" CONDITIONS. VERIFY EXISTING CONDITIONS PRIOR TO SUBMITTING FINAL BID. COORDINATE NEW AND DEMOLITION WORK WITH ALL OTHER TRADES AND EXISTING CONDITIONS.
2. NOTIFY ARCHITECT, ENGINEER AND OWNER, AS APPLICABLE, IF ANY DANGEROUS CONDITIONS EXIST ON JOB SITE BEFORE ANY DEMOLITION OR REMODEL WORK BEGINS.
3. COORDINATE ANY NECESSARY POWER OUTAGES WITH THE LANDLORD AND OWNER AND MAKE EVERY ATTEMPT TO SCHEDULE DURING NON-BUSINESS OR OFF-PEAK BUSINESS HOURS TO MINIMIZE DISRUPTION TO BUSINESS OPERATIONS. REQUESTS FOR ELECTRICAL SHUTDOWNS OF THE LANDLORD'S EQUIPMENT SHALL BE BROUGHT IN WRITING TO THE ATTENTION OF THE LANDLORD AT LEAST 7 DAYS IN ADVANCE. SHUTDOWNS SHALL NOT BE PERFORMED WITHOUT WRITTEN APPROVAL FROM THE LANDLORD.
4. ALL ROOF PENETRATIONS, FLOOR CHASING OR CORE DRILLING SHALL REQUIRE THE SPECIFIC APPROVAL OF THE LANDLORD AND OWNER. ALL WORK IN COMMON AREAS, SHAFTS OR OTHER OWNER SPACES MUST BE SPECIFICALLY REVIEWED AND APPROVED BY THE LANDLORD PRIOR TO ANY WORK BEING PERFORMED. MINIMIZE DISTURBANCE TO OTHER BUILDING TENANTS.
5. FOR AREAS AND EQUIPMENT WITHIN THE SCOPE OF THIS REMODEL: EXISTING ELECTRICAL EQUIPMENT AND CIRCUITRY MAY BE REUSED IF IN GOOD CONDITION AND NEW DESIGN REQUIREMENTS CAN BE MET; OTHERWISE REPLACE.
6. FOR AREAS AND EQUIPMENT WITHIN THE SCOPE OF THIS REMODEL: REPAIR OR REPLACE ANY EXISTING DAMAGED OR RECALLED ELECTRICAL EQUIPMENT, LIGHT FIXTURES, WIRING DEVICES AND RELATED CIRCUITRY AND RESTORE ALL ELECTRICAL SYSTEMS TO PROPER WORKING ORDER. THE FINAL ELECTRICAL INSTALLATION SHALL BE FREE FROM ELECTRICAL DEFECTS TO THE SATISFACTION OF THE AHJ, OWNER, ARCHITECT AND ENGINEER.
7. FOR AREAS AND EQUIPMENT WITHIN THE SCOPE OF THIS REMODEL: VERIFY CONDITION AND AGE OF EXISTING REUSED ELECTRICAL EQUIPMENT, LIGHT FIXTURES, CIRCUIT BREAKERS, FUSES, CONDUIT, SWITCHES AND RELATED WIRING. NOTIFY OWNER OF ANY ELECTRICAL EQUIPMENT, LIGHT FIXTURES AND WIRING AGED BEYOND ITS USEFUL LIFE AND REPLACE AS DIRECTED. THE MAXIMUM EXPECTED USEFUL LIFE SHALL NOT EXCEED THE FOLLOWING, (AS DATED FROM THE POINT OF MANUFACTURE), UNLESS APPROVED BY THE ENGINEER, MANUFACTURER AND OWNER: 20 YEARS FOR CIRCUIT BREAKERS, GENERATOR/UPS SYSTEMS AND LIGHT FIXTURES, 30 YEARS FOR TRANSFORMERS AND PANELBOARDS, 40 YEARS FOR SWITCHBOARDS AND OTHER ELECTRICAL EQUIPMENT.
8. FOR AREAS AND EQUIPMENT WITHIN THE SCOPE OF THIS REMODEL: ELECTRICAL EQUIPMENT SHALL BE LOCATED SO THAT THE CODE REQUIRED MINIMUM WORKING CLEARANCE AND DEDICATED ELECTRICAL SPACE ARE MAINTAINED. EXISTING EQUIPMENT NOT MEETING CURRENT CODE CLEARANCE REQUIREMENTS MAY REMAIN IF ALLOWED TO REMAIN BY THE AHJ, ENGINEER AND OWNER.

ELECTRICAL SUPPLEMENTAL SPECIFICATIONS:

1. PRIOR TO SUBMITTING BID, VISIT THE JOB SITE AND BECOME FULLY ACQUAINTED WITH THE EXISTING CONDITIONS. AS APPLICABLE, REVIEW THE LANDLORD CRITERIA, GENERAL NOTES, OTHER TRADE DRAWINGS AND SPECIFICATIONS FOR ADDITIONAL REQUIREMENTS THAT MAY NOT BE CALLED OUT IN THIS PORTION OF THE CONSTRUCTION DOCUMENTS. NOTIFY ARCHITECT AND ENGINEER OF ANY CONFLICTS OR DISCREPANCIES PRIOR TO SUBMITTING BID.
2. ALL WORK SHALL CONFORM TO ALL LOCAL CODES AND ORDINANCES AS WELL AS APPLICABLE INDUSTRY STANDARDS. ALL EQUIPMENT SHALL BEAR LABELS FOR THE USE INTENDED BY AN AHJ ACCEPTED NATIONALLY RECOGNIZED TESTING LABORATORY (NRTL), SUCH AS UL OR ETL. THE FINAL ELECTRICAL INSTALLATION OF THE FACILITY OCCUPIED BY OWNER SHALL BE FREE FROM ELECTRICAL DEFECTS TO THE SATISFACTION OF THE AHJ, OWNER, ARCHITECT AND ENGINEER.
3. COORDINATE FINAL LOCATION AND INSTALLATION REQUIREMENTS OF ALL LIGHT FIXTURES, ELECTRICAL EQUIPMENT AND ELECTRICAL DEVICES WITH ARCHITECTURAL DRAWINGS, EXISTING CONDITIONS AND OTHER TRADES PRIOR TO ROUGH-IN. PROVIDE ALL NECESSARY DEVICES, CORDS, PLUGS, DISCONNECTS AND FINAL CONNECTIONS TO ELECTRICAL EQUIPMENT FOR PROPER OPERATION IN ACCORDANCE WITH CODE, OWNER AND MANUFACTURER REQUIREMENTS.
4. ELECTRICAL DRAWINGS ARE DIAGRAMMATIC/SCHEMATIC IN NATURE AND REPRESENT THE GENERAL SCOPE OF WORK. IT IS NOT WITHIN THE SCOPE OF THE ELECTRICAL DRAWINGS TO SHOW ALL NECESSARY RACEWAY ROUTING, BENDS, OFFSETS, PULL BOXES AND OBSTRUCTIONS. CONTRACTOR SHALL COORDINATE THE FINAL LOCATION OF EQUIPMENT AND WIRING DEVICES WITH OTHER TRADES PRIOR TO INSTALLATION AND INSTALL ALL WORK TO CONFORM TO THE OWNER REQUIREMENTS.
5. ALL CONDUCTOR AND CONDUIT LENGTHS SHOWN IN THESE DESIGN DOCUMENTS ARE INTENDED SOLELY FOR USE IN THE DESIGN CALCULATIONS BY THE DESIGN PROFESSIONAL, UNLESS NOTED OTHERWISE. LENGTHS SHOWN SHALL NOT BE USED TO ASSIST IN THE BIDDING TAKEOFF PROCESS. THE CONTRACTOR IS SOLELY RESPONSIBLE FOR THE MATERIAL QUANTITIES REQUIRED TO BID AND CONSTRUCT THE COMPLETE PROJECT.
6. PROVIDE PROPER FIRE PROOFING AND SEALANT FOR PENETRATIONS THROUGH FIRE RATED ASSEMBLIES. THE FIRE STOPPING METHOD, MATERIAL AND ITS APPLICATION SHALL BE NRTL LISTED, CODE COMPLIANT AND APPROVED BY AHJ.
7. FOR CAST-IN-PLACE CONCRETE, TILT-UP WALLS, PRECAST OR SIMILAR PRE-ENGINEERED WALL SYSTEMS: COORDINATE THE FINAL LOCATION OF ALL ELECTRICAL DEVICES, RACEWAYS, LIGHT FIXTURES AND PENETRATIONS WITH ARCHITECT, WALL SUPPLIER AND OTHER TRADES PRIOR TO WALL CONSTRUCTION. CONDUIT/RACEWAY IMBEDDED IN CONCRETE WALLS SHALL BE SCHEDULE 80 PVC OR LFMC; OTHER TYPES MAY BE ALLOWED IF APPROVED BY WALL SYSTEM MANUFACTURER AND ENGINEER.
8. ALL APPLICABLE SWITCHES, RECEPTACLES, OUTLETS, AND CONTROLS SHALL BE PLACED AT HEIGHTS THAT ARE IN ACCORDANCE WITH ADA ACCESSIBILITY GUIDELINES.
9. WIRING DEVICES ADJACENT TO EACH OTHER SHALL BE INSTALLED UNDER A SINGLE COVER PLATE, UNO.
10. WIRING DEVICES SHOWN BACK-TO-BACK ON A COMMON WALL SHALL BE OFFSET A MINIMUM OF 12" HORIZONTALLY TO REDUCE SOUND TRANSMISSION BETWEEN ROOMS, UNO.
11. ALL WP OUTLET BOX HOODS SHALL BE "EXTRA-DUTY" AND "WHILE-IN-USE COVER" TYPE. OUTLET BOX HOODS SHALL BE LOW PROFILE WHEREVER PRACTICABLE, UNLESS NOTED OTHERWISE. THE USE OF LARGE BUBBLE COVERS SHALL BE AVOIDED ON THE EXTERIOR OF THE BUILDING OR BEHIND EQUIPMENT IN ORDER TO PREVENT DAMAGE TO THE COVER AND TO ALLOW THE EQUIPMENT TO BE LOCATED CLOSE TO THE WALL.
12. ALL SINGLE-PHASE RECEPTACLES RATED 150 VOLTS TO GROUND OR LESS, 50 AMPERES OR LESS AND THREE PHASE RECEPTACLES RATED 150 VOLTS TO GROUND OR LESS, 100 AMPERES OR LESS INSTALLED N LOCATIONS REQUIRED BY CODE (THIS INCLUDES BATHROOMS, KITCHENS/FOOD PREP AREAS, GARAGES, EXTERIOR LOCATIONS AND RECEPTACLES WITHIN 6 FEET OF A SINK). SHALL BE PROVIDED GROUND-FAULT CIRCUIT-INTERRUPTER PROTECTION FOR PERSONNEL PER N.E.C. 210.8 AND INSTALLED IN ACCORDANCE WITH N.E.C. 240.24. ALTERNATIVELY, A GFCI CIRCUIT BREAKER CAN BE INSTALLED.GFCI RECEPTACLES SHALL BE READILY ACCESSIBLE AND SHALL NOT BE LOCATED BEHIND STATIONARY EQUIPMENT. GFCI PROTECTION MAY BE VIA A GFCI CIRCUIT BREAKER OR GFCI RECEPTACLE, UNLESS NOTED OTHERWISE. WHERE NECESSARY, GFCI PROTECTION MAY BE ACHIEVED VIA A BLANK FACE GFCI DEVICE LOCATED IN A READILY ACCESSIBLE LOCATION NEAR RECEPTACLE BEING PROTECTED. FOR DOWNSTREAM WIRING DEVICES LOCATED ON THE SAME BRANCH CIRCUIT, THE GFCI PROTECTION MAY BE PROVIDED FOR BY A SINGLE UPSTREAM DEVICE IF ALL PROTECTED DEVICES ARE LABELED PER CODE.)
13. PROVIDE TAMPER-RESISTANT (TR) TYPE RECEPTACLES AT ALL CODE REQUIRED LOCATIONS AND AT LOCATIONS WHERE RECEPTACLES ARE MOUNTED LESS THAN 5'-6" AFF AND ARE EASILY ACCESSIBLE BY CHILDREN, UNLESS NOTED OTHERWISE.
14. FLEXIBLE CONDUIT IS ONLY PERMITTED WHERE SPECIFICALLY ALLOWED IN THE CONSTRUCTION DOCUMENTS, WHERE CONCEALED FROM VIEW OR EXPOSED FINAL CONNECTIONS TO LIGHT FIXTURES AND EQUIPMENT IN LENGTHS OF 6'-0" OR LESS.
15. ALL EMPTY CONDUIT/RACEWAY SHALL BE INSTALLED WITH PULL STRINGS. TERMINATE CONDUIT STUB-UP WITH A NYLON BUSHING.
16. EXPOSED CONDUIT/RACEWAY SHALL BE PAINTED TO MATCH ADJACENT SURFACE, UNLESS NOTED OTHERWISE. COORDINATE REQUIREMENTS WITH ARCHITECT AND OWNER PRIOR TO INSTALLATION.
17. CONDUITS/RACEWAYS SHALL BE CONCEALED FROM VIEW WHEREVER PRACTICABLE, UNLESS NOTED OTHERWISE. ROUTE CONDUITS SERVING ROOFTOP EQUIPMENT CONCEALED INSIDE EQUIPMENT CURB AND MINIMIZE ROOF PENETRATIONS AND EXTERIOR CONDUIT RUNS WHERE PRACTICABLE. SUPPORT RACEWAY FROM STRUCTURE, NOT ROOF DECK. MAINTAIN 2" MIN SPACING FROM BOTTOM OF ROOF DECK TO PREVENT ROOFING SCREWS FROM PENETRATING RACEWAY. DO NOT ROUTE CONDUITS ACROSS SKYLIGHTS, ACCESS PANELS, HATCHED TILES, HVAC DIFFUSERS, OR EQUIPMENT WORKING CLEARANCE SPACE. ROUTE ALL EXPOSED NON-FLEXIBLE CONDUITS TIGHT TO STRUCTURE, PARALLEL TO BUILDING LINES AND IN STRUT OR CABLE/PIPE TRAY WHERE PRACTICABLE. INSTALL CONDUITS PLUMB LEVEL WHERE EXPOSED TO VIEW. COORDINATE RACEWAY ROUTING AND INSTALLATION WITH OTHER TRADES PRIOR TO ROUGH-IN.
18. WHERE PRACTICABLE, ALL UNDER-FLOOR/UNDER-GROUND CONDUITS/RACEWAY SHALL BE INSTALLED A MINIMUM OF 24" BELOW BOTTOM OF SLAB/PAVING/GRADE, UNLESS NOTED OTHERWISE. NOTE: THE DESIGN INTENT FOR INSTALLING ELECTRICAL CIRCUITRY AT THIS DEPTH IS TO PROTECT THE ELECTRICAL CIRCUITRY FROM DAMAGE DUE TO FUTURE WORK.
19. PROVIDE LABEL AT EACH RECEPTACLE COVER PLATE WITH THE RESPECTIVE "PNLBD-CKT#" DESIGNATION. COORDINATE LABEL REQUIREMENTS WITH THE OWNER PRIOR TO INSTALLATION. REFER TO THE SPECIFICATIONS FOR MORE INFORMATION.
20. MULTIWIRE BRANCH CIRCUITS ARE NOT ALLOWED, UNLESS NOTED OTHERWISE.
21. PROVIDE INSULATED EQUIPMENT GROUNDING CONDUCTOR FOR ALL CIRCUITS, UNLESS NOTED OTHERWISE.
22. IF CONTRACTOR IS RESPONSIBLE FOR INSTALLING UTILITY TRANSFORMER PAD (FOR NEW UTILITY TRANSFORMER) REFER TO SERVING UTILITY'S GREEN BOOK FOR INSTALLATION REQUIREMENTS AND COORDINATE TRANSFORMER INSTALLATION WITH UTILITY COMPANY.

SPECIAL SYSTEMS SUPPLEMENTAL SPECIFICATIONS:

1. PROVIDE NECESSARY BOXES, CONDUIT AND MAKE FINAL CONNECTIONS TO TEMPERATURE CONTROL DEVICES PER MANUFACTURER'S RECOMMENDATIONS. THIS INCLUDES BUT IS NOT LIMITED TO: MAIN CONTROL PANELS, THERMOSTATS, HUMIDISTATS, AC SOLENOIDS, HEAT RECLAIM WIRING, AHU CONTROL WIRING, DUCT FURNACE CONTROL WIRING, TIMERS, AND SIMILAR CONTROLS. PROVIDE CONDUIT FOR ALL WIRING WITHIN WALLS. PROVIDE CONTROL AND INTERLOCK WIRING WHEN NOT PROVIDED BY OTHER TRADES. COORDINATE REQUIREMENTS WITH EQUIPMENT SUPPLIERS AND OTHER TRADES PRIOR TO ROUGH-IN.
2. PROVIDE LINE VOLTAGE WIRING AND MAKE FINAL CONNECTIONS TO ALL DUCT-MOUNTED SMOKE DETECTORS, FIRE/SMOKE AND SMOKE DAMPERS WHERE APPLICABLE. COORDINATE REQUIREMENTS WITH OTHER TRADES PRIOR TO INSTALLATION.
3. DEVICES MOUNTED ON ACOUSTICAL TILE CEILINGS SHALL BE CENTERED ON THE TILE, UNO.
4. PROVIDE BOX AND 3/4" CONDUIT FROM EACH THERMOSTAT LOCATION TO MECHANICAL EQUIPMENT, (FLUSH MOUNT BOX WHEREVER PRACTICABLE). COORDINATE LOCATION OF ALL THERMOSTAT BOXES WITH MECHANICAL/CONTROLS CONTRACTOR AND OWNER PRIOR TO ROUGH-IN.
5. PROVIDE BOXES AND CONDUITS FOR THE FIRE PROTECTION SYSTEM LOW VOLTAGE WIRING AS REQUIRED. THIS INCLUDES EXPOSED WIRING LESS THAN 96" AFF. AT A MINIMUM, PROVIDE 3/4" CONDUIT, UNLESS NOTED OTHERWISE. COORDINATE REQUIREMENTS AND LOCATIONS WITH SYSTEM INSTALLER AND FIRE ALARM SPECIFICATIONS.
6. AT A MINIMUM, PROVIDE EXTRA DEEP, DOUBLE GANG COMMUNICATION OUTLET BOXES, (FLUSH MOUNTED WHEREVER PRACTICABLE), WITH SINGLE-GANG PLASTER RING AND 1" CONDUIT STUBBED-UP CONCEALED TO ACCESSIBLE CEILING SPACE, UNLESS NOTED OTHERWISE. PROVIDE SURFACE MOUNTED DATA BOXES WITHIN CABINETRY, AND SELECT OTHER LOCATIONS AS INDICATED ON THE DRAWINGS. COORDINATE TELEPHONE/DATA BOX AND CONDUIT LOCATIONS AND SIZES WITH OWNER AND OTHER TRADES PRIOR TO ROUGH-IN.
7. PROVIDE NYLON BUSHINGS FOR ALL COMMUNICATIONS AND LOW VOLTAGE WIRING CONDUITS AND SLEEVES, UNLESS NOTED OTHERWISE.
8. ALL COMMUNICATIONS AND LOW VOLTAGE WIRING CONDUIT SHALL BE INSTALLED WITH AN ACCESSIBLE PULLBOX BETWEEN EVERY 180 DEGREE CHANGE IN DIRECTION AND AT 100' INTERVALS OF CONTINUOUS RUNS.
9. MINIMUM BEND RADIUS FOR COMMUNICATIONS CONDUIT IS 6 TIMES THE INSIDE DIAMETER FOR CONDUITS 2" IN DIAMETER AND SMALLER AND 10 TIMES THE INSIDE DIAMETER FOR CONDUITS GREATER THAN 2" IN DIAMETER, UNLESS NOTED OTHERWISE.
10. LOW VOLTAGE COMMUNICATION, ENERGY MANAGEMENT, SOUND SYSTEM, SECURITY AND RELATED WIRING IS TO BE PERFORMED BY OTHERS UNDER A SEPARATE CONTRACT, UNLESS NOTED OTHERWISE. PROVIDE BOXES AND CONDUIT IN FINISHED AND RATED FLOORS/WALLS/CEILINGS TO ACCESSIBLE LOCATIONS FOR ALL LOW VOLTAGE WIRING. PROVIDE ALL LINE VOLTAGE CIRCUITRY (120V AND HIGHER) TO OWNER FURNISHED EQUIPMENT AND LOW VOLTAGE STEP-DOWN TRANSFORMERS AS REQUIRED. COORDINATE ELECTRICAL REQUIREMENTS AND LOCATIONS WITH SYSTEM INSTALLER AND OWNER.
11. ALL LOW VOLTAGE CLASS 2 OR 3 WIRING NOT IN CONDUIT SHALL BE PLENUM RATED WHERE APPLICABLE.
12. LOW VOLTAGE CABLE SHEATH LABELS AND RELATED MANUFACTURER INFO SHALL REMAIN APPARENT IN ALL EXPOSED APPLICATIONS. PROTECT ALL EXPOSED CABLING FROM PAINTING AND OVERSPRAY (INCLUDES CABLE NOT ROUTED IN CONDUIT AND THAT IS IN CABLE TRAY).
13. CABLES SHALL BE ROUTED THROUGH THE BUILDING CABLE TRAY/RACEWAY SYSTEM, UNLESS NOTED OTHERWISE. EXPOSED CABLING SHALL NOT BE ROUTED IN AREAS EXPOSED TO STRUCTURE UNLESS SPECIFICALLY PERMITTED BY THE OWNER. IN AREAS WHERE EXPOSED CABLES ARE ALLOWED, IT SHALL BE INSTALLED IN A NEAT AND WORKMAN LIKE MANNER IN ACCORDANCE WITH THE OWNER'S REQUIREMENTS. WHERE REQUIRED, PROVIDE CONDUIT TO ROUTE LOW VOLTAGE CABLING TO THE CABLE TRAY OR NEAREST ACCESSIBLE CEILING SPACE.
14. CONDUITS FOR COMMUNICATIONS OUTLETS SERVING ELEVATOR EQUIPMENT ROOMS, FACP, AND SIMILAR CRITICAL EQUIPMENT AS DESIGNATED BY THE OWNER SHALL BE CONTINUOUS ("HOMERUN") FROM OUTLET TO SERVING COMMUNICATIONS ROOM.

NOTE:
CHARGING ACTIVITIES SHALL NOT TAKE PLACE WITHIN ELECTRICALLY CLASSIFIED AREAS.

THIS FACILITY DOES NOT FALL UNDER THE AREA CLASSIFICATIONS LISTED IN SECTION 511.3 OF NFPA 70. ASIDE FROM ALCOHOL BASED WINDSHIELD WASHER FLUID, CLASS I LIQUIDS OR GASEOUS FUELS ARE NOT STORED, HANDLED, OR TRANSFERRED OUTSIDE OF THE PAINT BOOTH AND MIXING ROOM.

THE AREA USED FOR STORAGE, HANDLING, OR DISPENSING INTO MOTOR VEHICLES OF ALCOHOL-BASED WINDSHIELD WASHER FLUID IN REPAIR GARAGES SHALL BE UNCLASSIFIED UNLESS OTHERWISE CLASSIFIED BY A PROVISION OF 511.3 PER NFPA 70.

PAINT BOOTH, MIXING ROOMS, PREP STATIONS AND ASSOCIATED EQUIPMENT ARE DESIGNED FULLY IN ACCORDANCE WITH THE 2018 EDITION OF INTERNATIONAL FIRE CODE AND THE 2018 EDITION OF NFPA 33.

APPLICABLE ELECTRICAL CODES:

NOTE: PROJECT IS DESIGNED IN COMPLIANCE WITH THE FOLLOWING CODES. THIS IS NOT AN EXHAUSTIVE LIST. PROJECT SHALL COMPLY WITH ALL APPLICABLE CODES, STANDARDS AND LOCAL REQUIREMENTS. REFER TO THE SPECIFICATIONS FOR ADDITIONAL REQUIREMENTS.

ELECTRICAL CODE: 2020 NATIONAL ELECTRIC CODE

BUILDING CODE: 2018 INTERNATIONAL BUILDING CODE

ENERGY CODE: 2018 INTERNATIONAL ENERGY CODE

THE RESPONSE GROUP, INC.
An Electrical Engineering Corporation
6705 Academy N.E. Suite B
Albuquerque, New Mexico 87109
Phone:(505) 323-7629 Fax:(505) 323-7594
E-mail: theresponsegroup@trg-inc.net

100% CDs

MODULUS ARCHITECTS AND LAND USE PLANNING
8220 SAN PEDRO DR NE
SUITE 520
ALBUQUERQUE, NEW MEXICO 87113
PHONE (505) 338-1499
FAX (505) 338-1498

COLORADO LICENSED
THOMAS F. RUEHL
63540
PROFESSIONAL ENGINEER
2/13/2024
23303

PROJECT TITLE

TESLA COLLISION CENTER

6951
S.BLACKHAWK
STREET,
BUILDING 1,
CENTENIAL. CO
80112

PROJECT MANAGER

DRAWN BY:

ISSUE / REVISION

SHEET TITLE

ELECTRICAL GENERAL NOTES

SCALE:

JOB NO.

SHEET NUMBER

E0.01

COPYRIGHT 2021 MODULUS ARCHITECTS

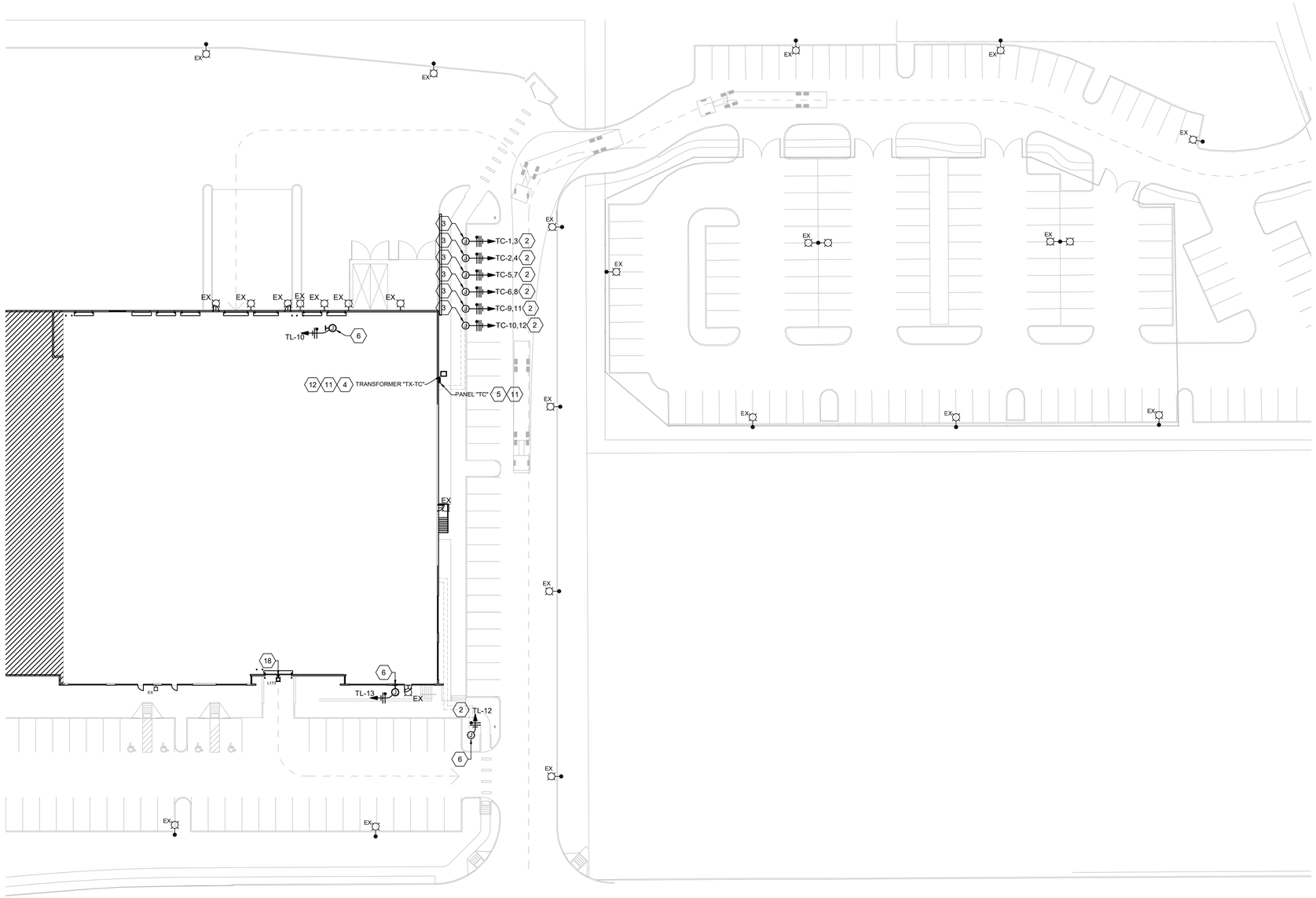

A1 ELECTRICAL SITE PLAN

0 15' 30' 60'
SCALE: 1" = 30'-0"

GENERAL NOTES

1. ALL CIRCUITING/CONDUIT/CONDUCTORS INDICATED ON PLAN SHALL BE CONSIDERED A GRAPHIC REPRESENTATION. CONTRACTOR SHALL DETERMINE ALL ROUTING OF CONDUITS IN FIELD. EXACT ROUTING & STUB-UP LOCATIONS SHALL BE COORDINATED IN FIELD WITH OWNER/CONSTRUCTION MANAGER (AND UTILITY COMPANY WHEN APPLICABLE).
2. ANY CONDUCTOR SIZES NOTED ON ELECTRICAL SITE PLAN, BASED ON ESTIMATED LENGTHS OF CONDUIT RUNS & CALCULATED LOADS, THROUGHOUT THE PROPOSED CIRCUITING INDICATED ON PLAN. CONDUIT/CONDUCTOR SIZES SHOWN ON PLAN SHALL BE CONSIDERED THE MINIMUM SIZE REQUIREMENTS, CONTRACTOR TO ADJUST WIRE SIZES (AND CONDUIT SIZES, AS REQUIRED) TO ACCOUNT FOR VOLTAGE DROP BASED ON ACTUAL ROUTING OF CONDUIT/CONDUCTORS DETERMINED IN FIELD.
3. CONTRACTOR TO FIELD VERIFY ALL UTILITIES IN AREA OF WORK PRIOR TO ANY TRENCHING/BORING.
4. COORDINATE ROUTING OF CONDUITS WITH ALL OTHER DISCIPLINES IN FIELD.
5. WHEN POSSIBLE ALL CONDUITS SHALL BE INSTALLED PRIOR TO PARKING LOT/SIDEWALK CONSTRUCTION. CONTRACTOR TO PATCH & REPAIR ANY CONCRETE/PAVEMENT DISTURBED DURING CONSTRUCTION/ROUTING OF CONDUITS, IN A MANNER APPROVED BY OWNER/CONSTRUCTION MANAGER.
6. ALL CONDUITS, CONDUCTORS & JUNCTION BOXES INSTALLED UNDERGROUND SHALL BE WET LOCATION RATED. PROVIDE TRAFFIC RATED JUNCTION BOXES, AS NEED, BASED ON INSTALLATION LOCATION.
7. ALL UNDERGROUND CONDUITS SHALL BE INSTALLED IN COMPLIANCE WITH SECTION 300.5 OF THE N.E.C..
8. CONDUIT BENDS - NUMBER OF BENDS IN ONE RUN. THERE SHALL NOT BE MORE THAN THE EQUIVALENT OF FOUR QUARTER BENDS (360 DEGREES TOTAL) BETWEEN PULL POINTS (I.E. JUNCTION BOX) CONTRACTOR TO PROVIDE ADDITIONAL JUNCTION BOXES AS NEEDED. (NOTE: ALL JUNCTION BOXES SHALL BE RATED (PER CODE) FOR THE LOCATION FOR WHICH THEY ARE INSTALLED I.E. W.P. &OR TRAFFIC-RATED.)
9. SIGNAGE LOCATION SHOWN FOR ELECTRICAL PURPOSES ONLY. REFERENCE TENANT'S DRAWINGS FOR EXACT SIGNAGE LOCATION AND INFORMATION.
10. REFER TO CIVIL AND ARCHITECTURAL DRAWING FOR ADDITIONAL INFORMATION/REQUIREMENTS.
11. PROVIDE NEW TYPEWRITTEN PANEL BOARD DIRECTORIES WITH COMPLETE BRANCH CIRCUIT DESCRIPTIONS FOR PANELS MODIFIED IN THE SCOPE OF THIS WORK.
12. REFER TO E0.01 FOR ADDITIONAL GENERAL NOTES.
13. EXISTING CONDITIONS AND BRANCH CIRCUITING ARE BASED ON BEST AVAILABLE EXISTING INFORMATION AND SURVEY OBSERVATIONS AND ARE NOT GUARANTEED TO BE ACCURATE. FIELD VERIFY EXACT LOCATIONS AND ELECTRICAL INFORMATION PRIOR TO START OF WORK. NOTIFY TESLA PROJECT REP. IMMEDIATELY OF ANY DISCREPANCY AFFECTING THE INTENT OF THE DESIGN CONVEYED HEREIN.
14. GC SHALL VERIFY FULL SCOPE OF WORK WITH LANDLORD WORK LETTER PRIOR TO BID. NO EXTRAS OR CHANGE ORDERS SHALL BE GIVEN FOR THE GC'S FAILURE TO FULLY UNDERSTAND SCOPE.

NOTE

NOTE:
CONTRACTOR FIELD VERIFY EXACT MOUNTING LOCATION OF ALL PROPOSED EQUIPMENT (CHARGING EQUIPMENT, PANEL, TRANSFORMER ETC.) PRIOR TO START OF WORK. FIELD VERIFY ALL UNDERGROUND UTILITIES PRIOR TO START OF WORK. ALL TRENCHING SHOWN ON THIS PLAN SHALL BE CONSIDERED A GRAPHICAL REPRESENTATION. ALL TRENCHING & ROUTING OF CONDUITS SHALL BE DETERMINED/VERIFIED BY THE CONTRACTOR IN FIELD. COORDINATE ALL TRENCHING WITH LANDLORD, UTILITY COMPANY & TESLA'S CONSTRUCTION MANAGER TO AVOID CONFLICTS/DAMAGE. COORDINATE RESPONSIBILITIES OF PATCHING/REPAIRING PARKING LOT WITH LANDLORD & TESLA'S CONSTRUCTION MANAGER.

KEYED NOTES

1. CONTRACTOR TO EXTEND POWER TO NEW MONUMENT SIGN LOCATION. EXTEND (1) SET 2#10 & 1#10G IN 1"C (BASED ON ESTIMATE VOLTAGE DROP CALCULATION, ADJUST AS REQUIRED) FOR MONUMENT SIGN POWER. VERIFY ROUTING OF CONDUIT & STUB-UP LOCATION IN FIELD (VERIFY ALL UTILITIES IN AREA PRIOR TO TRENCHING/ BORING). COORDINATE POWER REQUIREMENTS FOR MONUMENT SIGN WITH SIGNAGE VENDOR PRIOR ROUTING OF CONDUIT. MONUMENT SIGN CIRCUIT SHALL BE CONTROLLED/PROGRAMMED VIA LIGHTING CONTROL SYSTEM FOR AUTOMATIC ON/OFF CONTROL (REFER TO SHEETS E2.00, E2.00A & E2.01 FOR ADDITIONAL INFORMATION.) PROVIDE LOCAL DISCONNECT SWITCH AT BASE SIGNAGE FOR MONUMENT SIGN AS REQUIRED BY CODE. ALL CONDUIT/CONDUCTORS/ DEVICES SHALL BE LISTED FOR THE ENVIRONMENT IN WHICH THE ARE INSTALLED. PROVIDE ALL NECESSARY DEVICES & COORDINATE INSTALLATIONS WITH SIGNAGE INSTALLER CONNECTIONS. ALL UNDERGROUND CONDUITS SHALL BE INSTALLED IN ACCORDANCE WITH N.E.C. 300.5. (NOTE: COORDINATE & FIELD VERIFY EXACT SIGN LOCATION WITH SIGN VENDOR & TESLA PROJECT MANAGER PRIOR TO START OF WORK.)
2. CONTRACTOR TO DETERMINE CONDUIT ROUTING IN FIELD. VERIFY ALL UNDERGROUND UTILITIES PRIOR TO START OF WORK. COORDINATE INSTALLATION WITH TESLA CONSTRUCTION MANAGER.
3. WALL OR POST MOUNTED CHARGING STATION: WALL CONNECTOR FURNISHED BY TESLA, TO BE INSTALLED BY CONTRACTOR. PROVIDE JUNCTION BOX FOR POWER CONNECTION TO CHARGING STATION LOCAL DISCONNECT NOT REQUIRED PER N.E.C. 625.43. INSTALL PER MANUFACTURER'S SPECIFICATIONS. FIELD VERIFY EXACT LOCATION OF ALL EQUIPMENT WITH TESLA PRIOR TO ROUGH-IN. SEE ARCHITECTURAL ELEVATIONS FOR EXACT MOUNTING HEIGHTS.
4. NEW EXTERIOR RATED (NEMA 3R), PAD MOUNTED, STEP-DOWN TRANSFORMER. CONTRACTOR TO FIELD VERIFY EXACT LOCATION OF TRANSFORMER/ TRANSFORMER PAD WITH TESLA CONSTRUCTION MANAGER, PRIOR TO START OF WORK. (NOTE: ROUTING OF FEEDER, FROM SERVING EQUIPMENT TO TRANSFORMER, SHALL BE DETERMINED IN FIELD. COORDINATE ROUTING WITH TESLA'S CONSTRUCTION MANAGER PRIOR TO INSTALLATION. SEE ONE-LINE SHEET E4.00 FOR ADDITIONAL INFORMATION/REQUIREMENTS.)
5. NEW PANEL "TC". VERIFY EXACT MOUNTING LOCATION IN FIELD. SEE ONE-DIAGRAM, SHEET E4.00 FOR FEEDER INFORMATION.
6. APPROXIMATE LOCATION OF EXTERIOR BUILDING SIGN. REFER TO SHEETS E2.00, E2.00A & E2.01 FOR CIRCUIT INFORMATION & ADDITIONAL REQUIREMENTS.
7. NOT USED.
8. NOT USED.
9. NOT USED.
10. NOT USED.
11. PROVIDE & MAINTAIN REQUIRED WORK CLEARANCE AROUND/IN FRONT OF ELECTRICAL EQUIPMENT.
12. CONTRACTOR TO PROVIDE CONCRETE PAD AT EQUIPMENT. CONCRETE PAD SHALL BE 6" THICK (MINIMUM), A MINIMUM OF 2" ABOVE GRADE, & SHALL EXTEND 6" BEYOND FACE OF EQUIPMENT. VERIFY ADDITIONAL REQUIREMENTS WITH EQUIPMENT INSTALLED.
13. NOT USED.
14. NOT USED.
15. NOT USED.
16. NOT USED.
17. NOT USED.
18. SEE ELECTRICAL LIGHTING PLANS, SHEETS E2.00 & E2.00A FOR ALL EXTERIOR WALL MOUNTED LIGHTING SCOPE OF WORK.
19. NOT USED.
20. NOT USED.
21. NOT USED.

THE RESPONSE GROUP, INC.
An Electrical Engineering Corporation
6705 Academy N.E. Suite B
Albuquerque, New Mexico 87109
Phone:(505) 323-7629 Fax:(505) 323-7594
E-mail: theresponsegroup@trg-inc.net

100% CDs

MODULUS ARCHITECTS
AND LAND USE PLANNING
8220 SAN PEDRO DR NE
SUITE 520
ALBUQUERQUE, NEW MEXICO 87113
PHONE (505) 338-1499
FAX (505) 338-1498

COLORADO LICENSED
THOMAS F. RUEHLE
63540
PROFESSIONAL ENGINEER
2/13/2024
23303

PROJECT TITLE

TESLA COLLISION CENTER

6951
S.BLACKHAWK
STREET,
BUILDING 1,
CENTENIAL. CO
80112

PROJECT MANAGER

DRAWN BY:

ISSUE / REVISION

SHEET TITLE

ELECTRICAL SITE PLAN

SCALE:

JOB NO.

SHEET NUMBER

E1.00

COPYRIGHT 2021 MODULUS ARCHITECTS

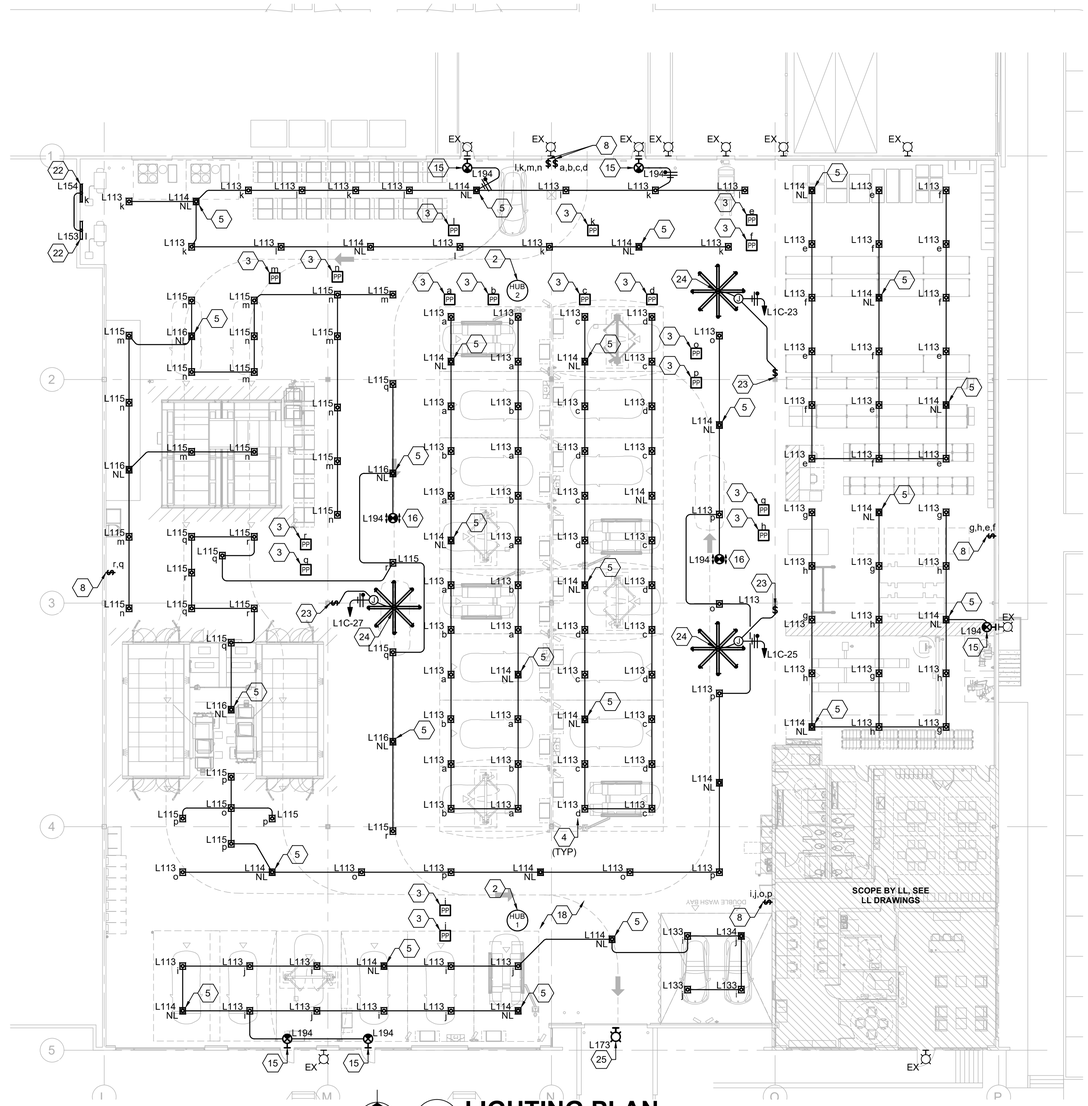

N 1 **LIGHTING PLAN**
SCALE: **1/16" = 1'-0"**

GENERAL NOTES

A. REFER TO SHEET E0.01 FOR ADDITIONAL GENERAL NOTES.

B. REFER TO LIGHTING DESIGNER'S LIGHT FIXTURE PACKAGE FOR LIGHT FIXTURE INFORMATION. LIGHT FIXTURE SCHEDULE LOCATED ON SHEET E2.01 FOR REFERENCE ONLY.

C. PROVIDE ALL OCCUPANCY SENSORS, DAYLIGHT SENSORS AND POWPAKS AS REQUIRED TO PROVIDE A COMPLETE AND OPERATING SYSTEM.

D. IF REQUIRED, PROVIDE ADDITIONAL EMERGENCY EGRESS LIGHTING WITHIN THE TENANT SPACE PER A.H.J. REQUIREMENTS AND TO MEET 1.0 FOOT-CANDLE AVERAGE, 0.1 FOOT-CANDLE MINIMUM AND A 40:1 MAXIMUM/MINIMUM RATIO ALONG THE ARCHITECT'S PATH OF EGRESS.

E. PROVIDE NEUTRAL CONDUCTOR TO EACH WALL LIGHT SWITCH LOCATION. IF NEUTRAL TERMINATION IS NOT REQUIRED CAP CONDUCTOR AND TAG AS "NEUTRAL FOR FUTURE USE."

F. PROVIDE LOW VOLTAGE CONDUCTORS AS REQUIRED FOR LOW VOLTAGE DIMMING.

G. EMERGENCY LIGHTS AND EXIT SIGNS WITH INTEGRAL BATTERY BACK-UP SHALL BE CONNECTED TO A SEPARATE UNSWITCHED CONDUCTOR BYPASSING ALL OTHER CONTROLS AND CONTACTORS, UNLESS NOTED OTHERWISE. EXIT SIGNS SHALL NOT BE SWITCHED. REFER TO MANUFACTURER'S WRITTEN INSTRUCTIONS FOR PROPER INSTALLATION AND TESTING. ALLOW BATTERY TO CHARGE FOR A MINIMUM OF 48 HOURS BEFORE LIGHT LEVEL TESTING. IN ORDER TO PREVENT BATTERY DAMAGE, DO NOT TURN OFF POWER FOR EXTENDED PERIODS OF TIME AFTER EMERGENCY LIGHT HAS BEEN POWERED.

H. (E) DENOTED AS EXISTING TO REMAIN.

I. (R) DENOTED AS RELOCATED LIGHT FIXTURE.

J. WHERE APPLICABLE, NEW LIGHT FIXTURES SHALL BE CONNECTED TO EXISTING BRANCH CIRCUIT OF LIGHT FIXTURES PREVIOUS DEMOLISHED IN THE SAME AREA. CIRCUITS SHOWN ARE BASED ON BEST AVAILABLE INFORMATION, FIELD VERIFY.

K. ALL UNDERGROUND CONDUITS SHALL BE INSTALLED IN ACCORDANCE WITH N.E.C. 300.5.

L. ALL NEW SERVICE AREA HIGHBAY FIXTURES SHALL BE MOUNTED AT 14'-0" A.F.F. TYPICAL (UNLESS NOTED OR DIRECTED OTHERWISE). PROVIDE UNISTRUT & SUPPORT CABLING (AS REQUIRED) TO SUSPEND/ SUPPORT FIXTURES. FIELD VERIFY FIXTURE MOUNTING HEIGHTS IN AREAS DIRECTLY OVER LIFTS, SHELVING AND RACKING PRIOR TO INSTALLATION. CONTRACTOR TO COORDINATE MOUNTING CONFLICTS WITH TESLA PROJECT MANAGER IN FIELD PRIOR TO INSTALLATION.

KEYED NOTES

1. PROVIDE AND CONNECT ALL LIGHTING CONTROL DEVICES FOR LIGHTING CONTROL SYSTEM AS INDICATED. (NOTE: LOWER CASE LETTER NEXT TO LIGHTING FIXTURES, CONTROLLED BY CONTROL DEVICES (I.E. POWPAKS, PICO SWITCHES, OCCUPANCY SENSORS,) WITH THE SAME LOWER CASE LETTER GROUP DESIGNATION. REFERENCE THE "LIGHTING CONTROL SCHEDULE" AND "LIGHTING CONTROL DEVICE SCHEDULE" ON SHEET E2.01 FOR MORE INFORMATION.
2. VIVE HUB. VERIFY EXACT MOUNTING LOCATION IN FIELD AND PROVIDE ALL NECESSARY MOUNTING DEVICES. INSTALL PER MANUFACTURER'S SPECIFICATIONS. SEE SHEET E2.01 FOR FOR THE FOLLOWING INFORMATION: SEE "VIVE HUB DEVICE SCHEDULE" FOR HUB MODEL SELECTION FOR EACH HUB LOCATION, SEE "LIGHTING CONTROL SCHEDULE" FOR DEVICE/CONTROL INFORMATION AND "LIGHTING CONTROL DEVICE SCHEDULE" FOR DEVICES CONNECTED TO EACH HUB LOCATION. (NOTE: ALL MAIN CONTROL DEVICES (I.E. POWPAKS & MAESTRO WIRELESS SENSORS) CONNECTED TO HUB MUST BE INSTALLED WITHIN A 71' RADIUS OF THE HUB. HUB SHALL NOT BE MOUNTED WITHIN 12" OF METAL OR METAL BACKED CEILING TILES.)
3. VIVE POWPAK. SEE "LIGHTING CONTROL DEVICE SCHEDULE", SHEET E2.01, FOR POWPAK DEVICE SELECTION FOR EACH POWPAK LOCATION. VERIFY EXACT MOUNTING LOCATION IN FIELD & INSTALL PER MANUFACTURER'S SPECIFICATIONS. SEE "LIGHTING CONTROL DEVICE SCHEDULE" ON SHEET E2.01 FOR ADDITIONAL DEVICE INFORMATION (NOTE: POWPAK LOCATIONS SHALL BE CONSIDERED A GRAPHICAL REPRESENTATIONS AND THE CONTRACTOR TO INSTALL POWPAKS IN LOCATIONS WITHIN MANUFACTURER'S RECOMMENDED DISTANCES FROM SERVING HUB AND WIRELESS CONTROL DEVICES TO ENSURE PROPER OPERATION. POWPAK MUST BE INSTALLED WITHIN 71' OF SERVING VIVE HUB. ALL WIRELESS SENSORS AND CONTROLS MUST BE LOCATED WITHIN 60' LINE OF SITE, OR 30' THROUGH WALLS, OF THE ASSOCIATED CONTROL MODULE (POWPAK). EACH POWPAK CAN CONNECT UP TO: (10) WIRELESS PICO REMOTE CONTROLS, (10) RADIO POWR SAVR OCCUPANCY SENSORS, (1) RADIO POWR SAVR DAYLIGHT SENSORS (MAXIMUM). POWPAK SHALL BE MOUNTED OUTSIDE OF JUNCTION BOX AND WAY FROM METAL OBSTRUCTIONS.)
4. CONNECT LIGHTING TO CONTROL DEVICES (I.E. POWPAKS, PICO SWITCH, SENSORS) INDICATED WITH THE SAME LOWERCASE LETTER GROUP DESIGNATION.
5. PROVIDE HOT, UNSWITCHED CONDUCTOR TO NIGHT LIGHT (NL) TO RENDER FIXTURE OPERATIONAL 24 HRS A DAY.
6. NOT USED.
7. MAESTRO WIRELESS SENSOR (WALL SWITCH). SEE "LIGHTING CONTROL DEVICE SCHEDULE", SHEET E2.01, FOR DEVICE SELECTION AT EACH SWITCH LOCATION. SEE "LIGHTING CONTROL DEVICE SCHEDULE", SHEET E2.01, FOR ADDITIONAL DEVICE INFORMATION (NOTE: MAESTRO WIRELESS SENSOR MUST BE INSTALLED WITHIN 71' OF SERVING VIVE HUB. CONNECT ALL ASSOCIATED WIRELESS CONTROLS/SENSOR (SHOWN ON PLAN) TO MAESTRO WALL SWITCH. PROVIDE ADDITIONAL WIRELESS SENSORS AS NEED FOR FULL ROOM COVERAGE. HARDWIRED CONNECTION BETWEEN WALL SWITCH AND LIGHTING REQUIRED.)
8. WIRELESS PICO CONTROLLER(S). VERIFY EXACT MOUNTING LOCATION IN FIELD AND PROVIDE ALL MOUNTING ACCESSORIES. SEE SHEET E5 FOR ADDITIONAL DEVICE/CONTROL INFORMATION. (REFER TO "MULTI-BUTTON SWITCH (PICO) SCHEDULE", SHEET E2.01 FOR ALL MULTI BUTTON PICO CONTROLLERS).
9. NOT USED.
10. NOT USED.
11. NOT USED.
12. NOT USED.
13. NOT USED.
14. NEW EXTERIOR WALL PACK FIXTURE. SEE ARCHITECTURAL ELEVATIONS FOR MOUNTING LOCATIONS. PROVIDE VIVE POWPAK (SEE "LIGHTING CONTROL SCHEDULE", SHEET E2.01, FOR POWPAK DEVICE SELECTION) TO CONNECT EXTERIOR LIGHTING TO VIVE LIGHTING CONTROL SYSTEM AND SET AUTOMATIC ON/OFF CONTROL SCHEDULE.
15. NEW EMERGENCY EGRESS FIXTURE. PROVIDE HOT, UNSWITCHED CONDUCTOR, AHEAD OF ALL SWITCHING AND LIGHTING CONTROLS, ON NEW LOCAL AREA CIRCUIT. (PROVIDE ADDITIONAL EMERGENCY EGRESS FIXTURES AS REQUIRED BY AHJ.)
16. SUSPENDED NEW EMERGENCY EGRESS EXIT FIXTURE. PROVIDE HOT, UNSWITCHED CONDUCTOR, AHEAD OF ALL SWITCHING AND LIGHTING CONTROLS, ON NEW OR EXISTING LOCAL AREA CIRCUIT. SUSPEND EXIT FIXTURE FROM STRUCTURE ABOVE (USING CHAINS OR OTHER TESLA APPROVED MOUNTING METHOD) AND MOUNT FIXTURE AT APPROXIMATELY 14' A.F.F., BOTTOM OF FIXTURE (VERIFY MOUNTING HEIGHT REQUIREMENTS/ RESTRICTIONS WITH TESLA'S CONSTRUCTION MANAGER AND A.H.J. IN FIELD, PRIOR TO INSTALLATION). CONDUIT/CONDUCTORS SHALL BE PROVIDE FROM STRUCTURE, TO CONNECTION AT FIXTURE USING FLEXIBLE METAL CONDUIT. (PROVIDE ADDITIONAL EXIT FIXTURES AS REQUIRED BY AHJ.) SEE LIGHTING FIXTURE SCHEDULE, SHEET E2.01 FOR FIXTURE INFORMATION.
17. NOT USED.
18. CONTRACTOR TO ROUTE CONDUITS & MOUNT JUNCTION BOXES TIGHT TO STRUCTURE (I.E., IN JOIST SPACE AND MOUNTED TO BAR JOIST, TYPICAL) TO PROVIDE CONNECTION TO SHOP & PARTS AREA LIGHTING (AND ALL OTHER HIGH CEILING AREA LIGHTING). CONTRACTOR TO FIELD VERIFY REQUIRED WHIP LENGTH NECESSARY TO MOUNT HIGHBAY FIXTURES AT 14'-0" A.F.F. (TYPICAL, UNLESS NOTED OR DIRECTED OTHERWISE), BASED ON CEILING HEIGHT/JUNCTION BOX MOUNTING LOCATION (AT EACH FIXTURE). AS REQUIRED, CONTRACTOR SHALL PROVIDE HIGH CEILING MOUNTING HARDWARE ACCESSORY KITS, WITH REQUIRED WHIP LENGTH, ORDERED THROUGH TESLA APPROVED LIGHTING VENDOR. SEE LIGHTING FIXTURE SCHEDULE SHEET E2.01 FOR ADDITIONAL INFORMATION.
19. NOT USED.
20. CONTRACTOR TO COORDINATE EXACT PLACEMENT OF LIGHTING IN THIS AREA, TO AVOID CONFLICTS WITH OVERHEAD DOOR/DOOR TRACKS. VERIFY EXACT MOUNTING LOCATIONS IN FIELD.
21. NOT USED.
22. SURFACE WALL MOUNTED STRIP LIGHT, MOUNTED AT 7'-6" A.F.F. OF FIXTURES (OR MOUNTED JUST ABOVE DOOR FRAME, WHEN APPLICABLE). PROVIDE ALL NECESSARY MOUNTING ACCESSORIES.
23. PROVIDE AND INSTALL WALL MOUNTED REMOTE CONTROLLER WITH CEILING FAN. REMOTE CONTROLLER SHALL CONTROL FAN AS INDICATED ON PLANS.
24. NEW FAN SHALL BE MOUNTED TO STRUCTURE AND MOUNTED SO THAT THE BOTTOM OF THE FAN IS 14'-0" ABOVE FINISHED FLOOR.
25. NEW WALL PACK TO BE LOCATED AT 21'-0" ABOVE FINISHED FLOOR.

MODULUS ARCHITECTS
AND LAND USE PLANNING
8220 SAN PEDRO DR NE
SUITE 520
ALBUQUERQUE, NEW MEXICO 87113
PHONE (505) 338-1499
FAX (505) 338-1498

COLORADO LICENSED
THOMAS F. RUEGG
63540
PROFESSIONAL ENGINEER
2/13/2024
23303

PROJECT TITLE

TESLA COLLISION CENTER

6951
S.BLACKHAWK
STREET,
BUILDING 1,
CENTENIAL. CO
80112

PROJECT MANAGER

DRAWN BY:

ISSUE / REVISION

1	11-29-23	CITY COMMENTS

SHEET TITLE

LIGHTING PLAN

SCALE:

JOB NO.

SHEET NUMBER

E2.00

100% CDs

THE RESPONSE GROUP, INC.
An Electrical Engineering Corporation
6705 Academy N.E. Suite B
Albuquerque, New Mexico 87109
Phone:(505) 323-7629 Fax:(505) 323-7594
E-mail: theresponsegroup@trg-inc.net

COPYRIGHT 2021 MODULUS ARCHITECTS

LIGHTING CONTROL SEQUENCE OF OPERATIONS

A. HOURS OF OPERATION
GENERAL NOTE: CONFIRM ALL "TIMECLOCK" SCHEDULES & SENSOR TIME DELAYS WITH OWNER PRIOR TO FINAL PROGRAMMING.

OCCUPIED HOURS: MON-FRI 9:00 AM - 10:00 PM, SAT 9:00 AM - 8:00 PM, SUN 10:00 AM - 7:00 PM (VERIFY OCCUPIED HOURS WITH OWNER IN FIELD PRIOR TO PROGRAMING.)
BUSINESS HOURS: MON-FRI 9:45 AM - 9:15 PM, SAT 9:45 AM - 7:15 PM, SUN 10:45 AM - 6:15 PM

B. GENERAL REQUIREMENTS
1. EMERGENCY EGRESS LIGHTING IS POWERED FROM EMERGENCY BATTERY BALLASTS & DRIVERS INTEGRAL TO FIXTURES DESIGNATED AS EMERGENCY. UPON LOSS OF POWER, ALL LIGHTS DESIGNATED AS EMERGENCY SHALL TURN ON AT FULL EMERGENCY BATTERY BACK-UP OUTPUT.

C. CUSTOMER AREA
1. TIMECLOCK: VIBE HUB SYSTEM CONTROLLED.
2. DAYLIGHTING: GENERAL LIGHTING WITHIN THE DAYLIGHT ZONE SHALL BE CONTINUOUSLY DIMMED AUTOMATICALLY. SETPOINT: THE LOWEST LIGHT LEVEL PERMITTED SHALL BE MEASURED AT THE TASK PLANE WITH ONLY ELECTRIC LIGHT CONTRIBUTIONS. FIXTURES SHALL NOT DIM BELOW 20% AS DETERMINED BY OWNER.
3. MANUAL CONTROL: WIRELESS SWITCH(ES) FOR LOCAL CONTROL.

D. BREAK ROOM
1. MANUAL CONTROL: OCCUPANT CAN MANUALLY CONTROL LIGHTS VIA LOCAL SWITCH(ES).
2. OCCUPANCY: OCCUPANT MUST MANUALLY TURN ON LIGHTS
3. VACANCY: AFTER 20 MINUTES, ALL CONTROLLED LOADS SHALL TURN OFF.

E. OFFICE
1. MANUAL CONTROL: OCCUPANT CAN MANUALLY CONTROL LIGHTS VIA LOCAL SWITCH(ES).
2. OCCUPANCY: OCCUPANT MUST MANUALLY TURN ON LIGHTS.
3. VACANCY: AFTER 20 MIN, ALL CONTROLLED LOADS SHALL TURN OFF.

F. RESTROOM
1. MANUAL CONTROL: OCCUPANT CAN MANUALLY CONTROL LIGHTS VIA LOCAL SWITCH(ES)
2. OCCUPANCY: ALL CONTROLLED LOADS SHALL AUTOMATICALLY TURN ON.
3. VACANCY: AFTER 20 MINUTES, ALL CONTROLLED LOADS SHALL TURN OFF.

G. SERVICE AREA
1. TIMECLOCK: VIVE HUB SYSTEM CONTROLLED.
2. MANUAL CONTROL: WIRELESS SWITCH(ES) FOR LOCAL CONTROL..
3. OCCUPANCY: LIGHTS SHALL TURN ON AUTOMATICALLY BASED ON TIMECLOCK SCHEDULE, UNLESS NOTED OTHERWISE.

   VACANCY: LIGHTS SHALL TURN OFF AUTOMATICALLY BASED ON TIMECLOCK SCHEDULE. REFER TO OCCUPANCY SECTION ABOVE FOR OPERATION SCHEDULE.

H. EXTERIOR BUILDING MOUNTED
1. TIMECLOCK: VIBE HUB SYSTEM CONTROLLED.
2. OCCUPANCY: LIGHTS SHALL TURN ON AUTOMATICALLY AS A FUNCTION OF AVAILABLE DAYLIGHT, BASED ON TIMECLOCK SCHEDULE UNLESS NOTED OTHERWISE.

   VACANCY: LIGHTS SHALL TURN OFF AUTOMATICALLY BASED ON TIMECLOCK SCHEDULE. REFER TO OCCUPANCY SECTION ABOVE FOR OPERATION SCHEDULE.

I. LOUNGE
1. TIMECLOCK: VIBE HUB SYSTEM CONTROLLED.
2. MANUAL CONTROL: OCCUPANT CAN MANUALLY CONTROL LIGHTS VIA LOCAL SWITCH(ES).
3. OCCUPANCY: OCCUPANT MUST MANUALLY TURN ON LIGHTS
4. VACANCY: AFTER 20 MINUTES, ALL CONTROLLED LOADS SHALL TURN OFF..

J. EXTERIOR BUILDING SIGNAGE/MONUMENT SIGNAGE
1. TIMECLOCK: VIBE HUB SYSTEM CONTROLLED.
2. OCCUPANCY: SIGNAGE SHALL TURN ON AUTOMATICALLY AS A FUNCTION OF AVAILABLE DAYLIGHT (DUSK), BASED ON TIMECLOCK SCHEDULE UNLESS NOTED OTHERWISE.
3. VACANCY: SIGNAGE SHALL TURN OFF AUTOMATICALLY BASED ON TIMECLOCK SCHEDULE. REFER TO OCCUPANCY SECTION ABOVE FOR OPERATION SCHEDULE.

UNOCCUPIED HOURS
CONTRACTOR PROGRAM A "SWEEPING OFF EVENT" THAT TURNS OFF ALL CONTROLLED INTERIOR LIGHTING NO MORE THAN 30 MINUTES AFTER THE LATEST NORMALLY OCCUPIED TIME, OF EACH DAY (BASED DAILY OCCUPIED HOURS). CONTRACTOR TO THEN PROGRAM ADDITIONAL "SWEEPING OFF EVENTS" EVERY TWO HOURS THROUGHOUT THE NIGHT, UNTIL TWO HOURS (OR LESS) BEFORE THE EARLIEST SCHEDULED, NORMALLY OCCUPIED TIME (EVENT) OF THE THE FOLLOWING DAY. CONTRACTOR SHALL REPEAT THIS PROCESS FOR ALL 7 DAYS OF THE WEEK, SCHEDULING SWEEPING OFF EVENTS IN INTERVALS OF NOT GREATER THAN 2 HOURS APART, DURING ALL NORMALLY UNOCCUPIED HOURS.

NOTE
CONTRACTOR RESPONSIBLE FOR SETUP & PROGRAMING OF VIVE LIGHTING CONTROLS SYSTEM. COORDINATE SCHEDULING REQUIREMENTS WITH OWNER/ TESLA OPERATIONS MANAGER.

UPON COMPLETION OF VIVE SYSTEM PROGRAMING, CONTRACTOR TO PROVIDE OWNER/TESLA OPERATIONS MANAGER, A OPERATIONS MANUAL FOR THE VIVE LIGHTING CONTROL SYSTEM. THIS OPERATIONS MANUAL SHALL PROVIDE THE USER WITH A OVERVIEW OF THE SYSTEM INSTALLED AS WELL AS DETAILED STEPS REQUIRED TO PERFORM BASIC COMMANDS/ FUNCTIONS OF THE SYSTEM (I.E. HOW AND WHERE TO ACCESS TO VIVE CONTROL SYSTEM INSTALLED, VIEW SCHEDULED TIME SETTINGS (EVENTS) PROGRAMMED WITHIN THE SYSTEM, ADJUST PROGRAMMED EVENTS FOR INDIVIDUAL DEVICES AS WELL AS SYSTEM WIDE SCHEDULED EVENTS, HOW TO A NEW SCHEDULE NEW EVENTS, HOW TO ADJUST TIME SETTINGS FOR DAYLIGHT SAVINGS TIME CHANGE EVENTS, ETC.....)

LIGHTING FIXTURE SCHEDULE GENERAL NOTES:
A. VERIFY CEILING CONDITIONS & COORDINATE LIGHT FIXTURE MOUNTING HARDWARE & TRIMS NEEDED TO SUIT CEILING CONDITIONS PRIOR TO ORDERING.

B. VERIFY QUANTITIES, MODEL NUMBERS & DESCRIPTIONS WITH MANUFACTURER PRIOR TO PLACING ORDER.

C. VERIFY FINISH & COLOR WITH ARCHITECT PRIOR TO PLACING ORDER.

D. REFER TO ARCHITECTURAL DRAWINGS & DETAILS FOR EXACT LOCATIONS & ADDITIONAL MOUNTING INFORMATION CONTACT ARCHITECT IMMEDIATELY IF THERE ARE DISCREPANCIES BETWEEN THE ARCHITECTURAL & ELECTRICAL LIGHTING PLANS.

E. REFER TO DIVISION 26 SPECIFICATIONS FOR ACCEPTABLE LAMP & BALLAST MANUFACTURERS & ADDITIONAL INFORMATION.

F. THE LIGHT FIXTURES WATTAGE VALUES LISTED ABOVE ARE THE TOTAL INPUT WATTS PER LIGHT FIXTURE INCLUDING ALL LOSSES & BALLAST FACTORS.

G. FOR DIMMABLE LIGHT FIXTURES, REFER TO DIVISION 26 SPECIFICATIONS FOR MORE INFORMATION REGARDING CONTROL WIRING & COMPATIBILITY.

H. CONTRACTOR SHALL PROVIDE ADDITIONAL SURGE PROTECTION PER MANUFACTURER'S RECOMMENDATIONS. DO NOT SHARE NEUTRALS - EC TO CONFIRM MINIMUM DIMMER LOAD REQUIREMENTS ARE MET.

I. CONTRACTOR TO PROVIDE ALL PROGRAMING AS NEED FOR A FULLY OPERATIONAL LIGHTING SYSTEM.

J. CONTRACTOR TO FIELD VERIFY REQUIRED WHIP LENGTH NECESSARY TO MOUNT HIGHBAY FIXTURES AT 14'-0" A.F.F. (TYPICAL, UNLESS NOTED OR DIRECTED OTHERWISE), BASED ON CEILING HEIGHT/JUNCTION BOX MOUNTING LOCATION (AT EACH FIXTURE). AS REQUIRED, CONTRACTOR SHALL PROVIDE HIGH CEILING MOUNTING HARDWARE ACCESSORY KITS, WITH REQUIRED WHIP LENGTH, ORDERED THROUGH TESLA APPROVED LIGHTING VENDOR. SEE LIGHTING FIXTURE SCHEDULE THIS SHEET FOR STANDARD WHIP LENGTHS & OPTIONAL WHIP ACCESSORY OPTIONS. (NOTE: KEYSTONE HIGHBAY FIXTURE WHIP LENGTH INDICATED BY "X" IN "NPXD" PORTION OF THE ITEM NUMBER. CONTRACTOR TO VERIFY WHIP SELECTION WITH AT EACH FIXTURE. VERIFY WHIP LENGTH OPTIONS WITH LIGHTING VENDOR.)

LIGHTING CONTROL DEVICE SCHEDULE

VIVE HUB DEVICES

TYPE	MANUFACTURER/ MODEL/SERIES	DEVICE DESCRIPTION	VOLTAGE	NOTES
HUB-0	LUTRON (VIVE)/HU5-0	"STARTER" VIVE WIRELESS HUB, SUPPORTS UP TO 75 LUTRON WIRELESS DEVICES. AVAILABLE WITH FLUSH MOUNT ADAPTER (ONLY, VERIFY WITH LIGHTING VENDOR) AND POWER SUPPLY. STAND ALONE UNIT OR CONNECT UP TO 64 HUBS TO CREATE A NETWORK.	120/277	PROVIDE MOUNTED ADAPTER BASED ON INSTALL LOCATION (FM = FLUSH MOUNT, SM = SURFACE MOUNT). REQUIRES A HARDWIRED POWER CONNECTION. HUB SHALL BE MOUNTED A MINIMUM OF 12" AWAY FROM METAL OBJECTS. COORDINATE HUB DATA SETUP/CONNECTION WITH CLIENT'S I.T. CONTRACTOR. HARDWIRED EHTERNET CONNECTIONS TO I.T. CABINET ARE PROHIBITED.
HUB-1	LUTRON (VIVE)/HU5-1	"BASIC" VIVE WIRELESS HUB, SUPPORTS UP TO 700 LUTRON WIRELESS DEVICES. AVAILABLE WITH FLUSH MOUNT ADAPTER (ONLY, VERIFY WITH LIGHTING VENDOR) AND POWER SUPPLY. STAND ALONE UNIT OR CONNECT UP TO 64 HUBS TO CREATE A NETWORK.	120/277	PROVIDE MOUNTED ADAPTER BASED ON INSTALL LOCATION (FM = FLUSH MOUNT, SM = SURFACE MOUNT). REQUIRES A HARDWIRED POWER CONNECTION. HUB SHALL BE MOUNTED A MINIMUM OF 12" AWAY FROM METAL OBJECTS. COORDINATE HUB DATA SETUP/CONNECTION WITH CLIENT'S I.T. CONTRACTOR. HARDWIRED EHTERNET CONNECTIONS TO I.T. CABINET ARE PROHIBITED.
HUB-2	LUTRON (VIVE)/HU5-2	"PREMIUM" VIVE WIRELESS HUB, SUPPORTS UP TO 700 LUTRON WIRELESS DEVICES BACnet. AVAILABLE WITH FLUSH MOUNT ADAPTER (ONLY, VERIFY WITH LIGHTING VENDOR) AND POWER SUPPLY. STAND ALONE UNIT OR CONNECT UP TO 64 HUBS TO CREATE A NETWORK.	120/277	PROVIDE MOUNTED ADAPTER BASED ON INSTALL LOCATION (FM = FLUSH MOUNT, SM = SURFACE MOUNT). REQUIRES A HARDWIRED POWER CONNECTION. HUB SHALL BE MOUNTED A MINIMUM OF 12" AWAY FROM METAL OBJECTS. COORDINATE HUB DATA SETUP/CONNECTION WITH CLIENT'S I.T. CONTRACTOR. HARDWIRED EHTERNET CONNECTIONS TO I.T. CABINET ARE PROHIBITED.

VIVE POWPAK DEVICES

TYPE	MANUFACTURER/ MODEL/SERIES	DEVICE DESCRIPTION	VOLTAGE	NOTES
PP-S5	LUTRON (VIVE)/RMJS-5R-DV-B	POWPAK RELAY MODULE WITH SOFTSWITCH, 5 AMP LIGHTING CONTROL (120 OR 277), OF LIGHTING, FLYING LEADS.	120/277	REQUIRES HARDWIRED POWER CONNECTION.
PP-16S	LUTRON (VIVE)/RMJS-16R-DV-B	POWPAK RELAY MODULE WITH SOFTSWITCH, 16 AMP LIGHTING CONTROL (120 OR 277) OF LIGHTING,	120/277	REQUIRES HARDWIRED POWER CONNECTION.
PP-8TN	LUTRON (VIVE)/RMJS-8TN-DV-B	POWPAK DIMMING MODULE WITH 0-10V CONTROL, SWITCHES UP TO 8 AMP (120 OR 277), OF LIGHTING,	120/277	REQUIRES HARDWIRED POWER CONNECTION.
PP-1T	LUTRON (VIVE)/FCJS-010	POWPAK WIRELESS FIXTURE CONTROL, THAT CONTROLS A SINGLE 0-10V FIXTURE AND CAN BE WIRED TO A POWPAK FIXTURE SENSOR	120/277	REQUIRES HARDWIRED POWER CONNECTION.

VIVE MAESTRO WIRELESS DIMMER SENSOR (WALL SWITCH/POWPAK)

TYPE	MANUFACTURER/ MODEL/SERIES	DEVICE DESCRIPTION	VOLTAGE	NOTES
OS-MW	LUTRON (VIVE)/MRF25-8SD010	MAESRO WIRELESS 0-10V DIMMER/SENSOR/WALL SWITCH, SWITCHES UP TO 8 AMPS (120 OR 277) OCCUPANCY/VACANCY SENSOR/CONTROL	120/200	REQUIRES HAEDWIRED POWER CONNECTION. PROVIDE ADDITIONAL WIRELESS CONTROL DEVICES AND ADDITIONAL CONTROL POINTS AS REQUIRED.

VIVE MAESTRO WIRELESS DIMMER SENSOR (WALL SWITCH/POWPAK)

TYPE	MANUFACTURER/ MODEL/SERIES	DEVICE DESCRIPTION	VOLTAGE	NOTES
OC (CEILING)	LUTRON (VIVE) LRF2-OCR2B-P-WH	RADIO POWER SAVER WIRELESS CEILING MOUNT OCCUPANCY SENSOR	120/277	CERIFY EXACT MOUNTING LOCATION IN FIELD. PROVIDE ADDITIONAL SESORS AS REQUIRED FOR FULL COVERAGE OF SPACES CONTROLLED.
DL (CEILING)	LUTRON (VIVE)/LRF2-DCRB-WH	RADIO POWER SAVER WIRELESS CEILING MOUNT DAYLIGHT SENSOR	120/277	VERIFY EXACT MOUNTING LOCATION IN FIELD.

VIVE PICO DEVICES

TYPE	MANUFACTURER/ MODEL/SERIES	DEVICE DESCRIPTION	VOLTAGE	NOTES
P2	LUTRON (VIVE)/PJ2-2B-GWH-L01	2 BUTTON, WITH LIGHT ICON ON PICO KEY PAD	120/277	COORDINATE SWITCH LOCATION(S) WITH TESLA PROJECT MANAGER IN FIELD.
P2RL	LUTRON (VIVE)/PJ2-2BRL-GWH-L01	2 BUTTON, WITH RAISE/LOWER AND LIGHT ICON ON PICO KEY PAD	120/277	COORDINATE SWITCH LOCATION(S) WITH TESLA PROJECT MANAGER IN FIELD.
P4	LUTRON (VIVE)/PJ2-4B-GWH-L21	4 BUTTON GROUP, WITH LIGHT ICON ON PICO KEY PAD	120/277	COORDINATE SWITCH LOCATION(S) WITH TESLA PROJECT MANAGER IN FIELD.
P4S	LUTRON (VIVE)/PJ2-4B-GWH-L31	4 BUTTON SCENE, WITH LIGHT ICON ON PICO KEY PAD	120/277	COORDINATE SWITCH LOCATION(S) WITH TESLA PROJECT MANAGER IN FIELD.
P4RL	LUTRON (VIVE)/PJ2-4B-GWH-L01	4 BUTTON RAISE/LOWER, WITH LIGHT ICON ON PICO KEY PAD	120/277	COORDINATE SWITCH LOCATION(S) WITH TESLA PROJECT MANAGER IN FIELD.

HARDWIRED OCCUPANCY CONTROLS

TYPE	MANUFACTURER/ MODEL/SERIES	DEVICE DESCRIPTION	VOLTAGE	NOTES
OS-MW	LUTRON/MS-A102	MAESRO DUAL TECHNOLOGY SENSOR SWITCH. SWITCHES UP TO 6 AMPS (120 OR 277) OF LIGHTINGF. OCCUPANCY AND VACANCY SENSOR, NO NEUTRAL WIRE SINGLE POLE.	120/277	REQUIRES HARDWIRED POWER CONNECTION. USED AS A STAND ALONE OCCUPANCY SWITCH.

GENERAL NOTES:

A. PROVIDE AND INSTALL ADDITIONAL OCCUPANCY SENSOR DEVICES AS REQUIRED FOR FULL AREA COVERAGE.

B. PROVIDE SHOP DRAWINGS FOR ENGINEER AND ARCHITECT REVIEW, WITH PRODUCT CUTSHEETS AND PROJECT-SPECIFIC LAYOUTS. LAYOUTS MUST INCLUDE SENSOR LOCATIONS, HEIGHTS, ORIENTATION AND COVERAGE AREAS.

C. LIGHTING CONTROLS PRICING SHALL BE COMPLETELY SEPARATE ID FORM LIGHT FIXTURE PRICING.

D. VERIFY COLOR(S) FOR ALL WALL AND CEILING MOUNTED DEVICES WITH ARCHITECT/OWNER.

E. ALL WALL SWITCH AND CEILING SENSORS SHALL HAVE AN ADJUSTABLE TIME DELAY RANGE OF 0 - 20 MIN, UNLESS NOTED OTHERWISE. CONFIRM SENSOR SETTING WITH SEQUENCE OF OPERATIONS AND OWNER PRIOR TO SYSTEM COMMISSIONING.

F. PROVIDE COPIES OF OPERATION AND MAINTENANCE INSTRUCTIONS FOR ALL DEVICES TO OWNER.

G. PROVIDE AND INSTALL NEUTRAL CONDUCTOR ON LOAD SIDE OF DIMMERS.

H. DO NOT SHARE NEUTRAL CONDUCTOR ON LOAD SIDE OF DIMMERS.

I. REFER TO MANUFACTURER'S CUTSHEETS/WEBSITE FOR FULL LIST OF VIVE SYSTEM/HUB COMPATIBLE CONTROL DEVICES AND ACCESSORIES.

J. COORDINATE VIVE SYSTEM CONTROL AND AUTOMATIC SCHEDULE SETTINGS WITH CLIENT'S PROJECT MANAGER AND OWNER PRIOR TO COMMISIONING.

NOTES:

1. OWNER TO VERIFY MANUFACTURER. SELECTED MANUFACTURER ARE FOR BASIS OF DESIGN PURPOSE.

Contact Person: Michael Switalski
Contact Detail: 510 206 9139
mswitalski@tesla.com

Project: Tesla Collision Center Prototype
Date: 2/13/2024

	L101	Keystone	KT-BPLED40-24-835-VDIM	2X4 Led flat panel, 4,400 lumens, 835K, 0-10V DIM
	L102	Keystone	KT-BPLED40-24-835-VDIM EMRG-5	Same as type "L102", only with 90 min EM battery backup
	L103	Keystone	KT-BPLED40-22-835-VDIM	2X2 Led flat panel, 3,300 lumens, 835K, with 0-10V DIM
	L104	Keystone	KT-BPLED40-22-835-VDIM EM5	Same as L103 with 90 min EM battery backup
	L113	Cooper	HB-18-W-UNV-LO-CD-10-U	125w 18,000 lm Highbay 85CRI with 10' Cord
	L114	Cooper	HB-18-W-UNV-LO-EL20W-REM-CD-10-U	Same as L113 with 90 min EM battery backup
	L115	Cooper	HB-18-W-UNV-HI-CDC10-U	125w 18,000 lm Highbay 95CRI with 10' Cord
	L116	Cooper	HB-18-W-UNV-HI-EL20W-REM-CD-10-U	Same as L115 with 90 min EM battery backup
	L133	Brilliant	WWFHBLED150DMVCL50 AC120YHOOK cs205w	Vaportight Highbay 16500lm, 0-10V DIM with Hook and Power Cord
	L134	Brilliant	WWFHBLED150DMVCL50EM AC120YHOOK cs206w	Same as L133 with Hook, Power Cord and 90 min EM battery backup
	L141	Green Creative	NYXNC6RD/ S935-5S/ DUALDIM/ MD/ CW	6" downlight 2000 lumens
	L142	Green Creative	NYXNC6RD/ S935-5S/ DUALDIM/ MD/ CWEM5	6" downlight 2000 lumens EM
	L153	TCP	GPS4UZDSW4CCT	4' Led strip 4200 lumens 0-10v DIM
	L154	TCP	GPS4UZDSW4CCTEB	Same as L153 with 90 min EM battery backup
	L173	Acuity	ARC2 LED P3 40K MVOLT-xxxx (Finish)	Architectural wallpack 3000lm LOW mount application
	L174	Acuity	ARC2 LED P3 40K MVOLT-E4WH-xxxx (Finish)	Architectural wallpack 3000lm LOW mount application EM battery backup
	L191	Brilliant	TPZTEU1REM	Single face UNV mount die-cast aluminum exit red battery backup
	L192	Brilliant	TPZTEU2REM	Double face UNV mount die-cast aluminum exit red battery backup
	L193	Brilliant	EGSU1RCWEM	Single face edgelit UNV mount exit clear white red battery backup
	L193	Brilliant	EGSU2RMWEM	Double face edgelit UNV mount exit mirrored white red battery backup
	L194	Brilliant	TPU2RWEM	Thermoplastic exit EM battery backup

MULTI-BUTTON SWITCH (PICO)
NOTE: PROVIDE FACTORY BUTTON ENGRAVING FOR ALL MULTI-BUTTON SWITCHES WITH MORE THAN ONE BUTTON UNLESS NOTED OTHERWISE. REFER TO BUTTON LABEL COLUMN FOR TEXT.

CONTROL SYMBOL	BUTTON	POWPAK DEVICE/CONTROL GROUP DESIGNATION	BUTTON OPERATION
P4	1	a,b	ON
	2	a,b	OFF
	3	c,d	ON
	4	c,d	OFF
P4	1	e,f	ON
	2	e,f	OFF
	3	g,h	ON
	4	g,h	OFF
P4	1	l,k	ON
	2	l,k	OFF
	3	m,n	ON
	4	m,n	OFF
P4	1	i,j	ON
	2	i,j	OFF
	3	o,p	ON
	4	o,p	OFF
P2	1	Y	ON
	2	Y	OFF

VIVE HUB DEVICE SCHEDULE

HUB NUMBER	MOUNTING/CONTROL LOCATION	HUB TYPE
1	BUILDING - SERVICE AREA	HUB-0
2	BUILDING - SERVICE AREA	HUB-0
3	BUILDING - SERVICE AREA	HUB-0
4	BUILDING - SERVICE AREA	HUB-0
5	BUILDING - SERVICE AREA	HUB-0
6	BUILDING - FRONT OF HOUSE	HUB-0

GENERAL NOTES:
1. REFER TO LIGHTING CONTROL DEVICE SCHEDULE FOR HUB INFORMATION.
2. REFER TO LIGHTING PLANS FOR PROPOSED HUB MOUNTING LOCATION(S) VERIFY EXACT HUB MOUNTING LOCATIONS IN FIELD.
3. ALL CONTROL DEVICES CONNECT TO EACH HUB SHALL BE INSTALLED IN THE MANUFACTURER'S RECOMMENDED MOUNTING RANGE.
4. PAIR/CONNECT CONTROLS DEVICES WITH HUB PER MANUFACTURER'S SPECIFICATIONS.

LIGHTING CONTROL SCHEDULE

CIRCUIT	CONTROLLED LIGHTING GROUP (AREA/LOAD/DEVICE) DESIGNATION	CIRCUIT VOLTAGE	AREA/LOAD CONTROLLED	MAIN CONTROL DEVICE: POWPAK SELECTION	MAIN CONTROL DEVICE: MAESTRO WIRELESS SENSOR (WALL SWITCH)	MAIN CONTROL DEVICE AMPERAGE RATING	POWPAK CONTROL TYPE	CONNECTED TO HUB NUMBER	ADDITIONAL WIRELESS CONTROLS: PICO CONTROLLED	ADDITIONAL WIRELESS CONTROLS: OCCUPANCY SENSOR CONTROLLED	ADDITIONAL WIRELESS CONTROLS: DAYLIGHT SENSOR CONTROLLED	CONNECTED LOAD (WATTS)
TL-1	a	277V-1ø	SERVICE AREA 1/2 GENERAL LIGHTING	PP-16S	-	16A	SWITCHING	1	X			1500
TL-1	b	277V-1ø	SERVICE AREA 1/2 GENERAL LIGHTING	PP-16S	-	16A	SWITCHING	1	X			1125
TL-2	c	277V-1ø	SERVICE AREA 1/2 GENERAL LIGHTING	PP-16S	-	16A	SWITCHING	2	X			1375
TL-2	d	277V-1ø	SERVICE AREA 1/2 GENERAL LIGHTING	PP-16S	-	16A	SWITCHING	2	X			1125
TL-3	e	277V-1ø	SERVICE AREA 1/2 GENERAL LIGHTING	PP-16S	-	16A	SWITCHING	2	X			1000
TL-3	f	277V-1ø	SERVICE AREA 1/2 GENERAL LIGHTING	PP-16S	-	16A	SWITCHING	2	X			875
TL-4	g	277V-1ø	SERVICE AREA 1/2 GENERAL LIGHTING	PP-16S	-	16A	SWITCHING	1	X			750
TL-4	h	277V-1ø	SERVICE AREA 1/2 GENERAL LIGHTING	PP-16S	-	16A	SWITCHING	1	X			750
TL-5	i	277V-1ø	SERVICE AREA 1/2 GENERAL LIGHTING	PP-16S	-	16A	SWITCHING	3	X			1035
TL-5	j	277V-1ø	SERVICE AREA 1/2 GENERAL LIGHTING	PP-16S	-	16A	SWITCHING	3	X			910
TL-6	k	277V-1ø	SERVICE AREA 1/2 GENERAL LIGHTING	PP-16S	-	16A	SWITCHING	2	X			875
TL-6	l	277V-1ø	SERVICE AREA 1/2 GENERAL LIGHTING	PP-16S	-	16A	SWITCHING	2	X			750
TL-7	m	277V-1ø	SERVICE AREA 1/2 GENERAL LIGHTING	PP-16S	-	16A	SWITCHING	3	X			1000
TL-7	n	277V-1ø	SERVICE AREA 1/2 GENERAL LIGHTING	PP-16S	-	16A	SWITCHING	3	X			1125
TL-8	o	277V-1ø	SERVICE AREA 1/2 GENERAL LIGHTING	PP-16S	-	16A	SWITCHING	4	X			750
TL-8	p	277V-1ø	SERVICE AREA 1/2 GENERAL LIGHTING	PP-16S	-	16A	SWITCHING	4	X			1000
TL-9	q	277V-1ø	SERVICE AREA 1/2 GENERAL LIGHTING	PP-16S	-	16A	SWITCHING	5	X			750
TL-9	r	277V-1ø	SERVICE AREA 1/2 GENERAL LIGHTING	PP-16S	-	16A	SWITCHING	5	X			625
TL-11	s	277V-1ø	WALL PACK LIGHTING	PP-S5	-	5A	SWITCHING	6				144
TL-13	mm	277V-1ø	FAÇADE SIGNAGE	PP-16S	-	16A	SWITCHING	6				1200
TL-14	NN	277V-1ø	FAÇADE SIGNAGE	PP-16S	-	16A	SWITCHING	6				1200

THE RESPONSE GROUP, INC.
An Electrical Engineering Corporation
6705 Academy N.E. Suite B
Albuquerque, New Mexico 87109
Phone:(505) 323-7629 Fax:(505) 323-7594
E-mail: theresponsegroup@trg-inc.net

100% CDs

MODULUS ARCHITECTS AND LAND USE PLANNING
8220 SAN PEDRO DR NE
SUITE 520
ALBUQUERQUE, NEW MEXICO 87113
PHONE (505) 338-1499
FAX (505) 338-1498

COLORADO LICENSED
THOMAS F. RUEHLE
63540
PROFESSIONAL ENGINEER
2/13/2024
23303

PROJECT TITLE

TESLA COLLISION CENTER

6951
S.BLACKHAWK
STREET,
BUILDING 1,
CENTENIAL. CO
80112

PROJECT MANAGER

DRAWN BY:

ISSUE / REVISION

SHEET TITLE

LIGHTING SCHEDULES

SCALE:

JOB NO.

SHEET NUMBER

E2.01

All wireless devices to be associated to the Vive hub must be within 71 ft (22 m) of the Vive hub and must be on the same floor as the Vive hub.

Note: Vive hubs should be mounted greater than 10 ft (3 m) apart on the same floor.

Note: A corporate Wi-Fi network can interfere with the Wi-Fi on the Vive hub. Where a corporate Wi-Fi network exists, it is recommended to do the following:

- Connect the Vive hub to the corporate network using the Ethernet connection on the hub and disable Wi-Fi on the hub.

Note: Vive hubs should be mounted greater than 10 ft (3 m) from a Wi-Fi router or access point.

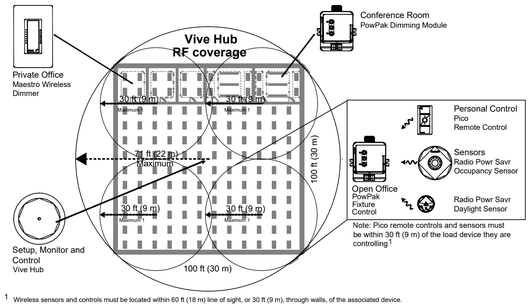

[1] Wireless sensors and controls must be located within 60 ft (18 m) line of sight, or 30 ft (9 m), through walls, of the associated device.

Range with multiple Vive hubs

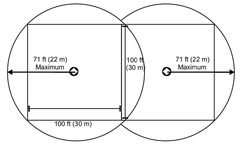

1 VIVE WIRELESS HUB RANGE DIAGRAMS (HJS-0, HJS-1, HJS-2)
NO SCALE

Product Overview
(Flush-mount adapter)

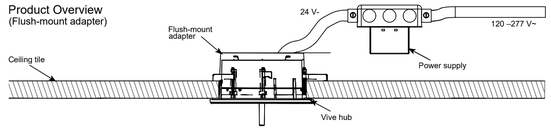

See Lutron Application Note #628 (P/N 048628) at www.lutron.com for information on wiring Emergency Lighting with a Vive System.

Product Overview
(Surface-mount adapter)

Note: For Chicago plenum space applications the power supply has a metal enclosure and can be mounted in the plenum space. The Vive hub cannot be mounted in the plenum space and needs to be mounted outside the plenum space on the surface of the ceiling.

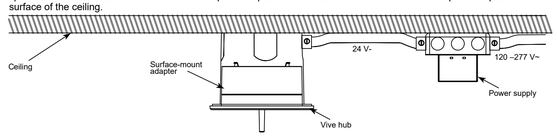

Vive Hub

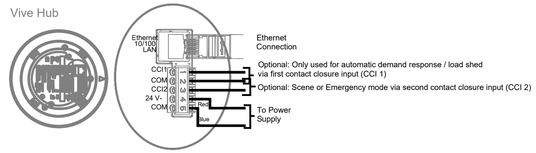

2 VIVE WIRELESS HUB -WRING (HJS-0, HJS-1, HJS-2)
NO SCALE

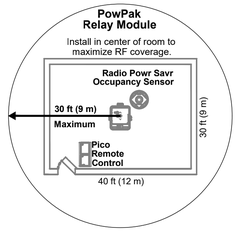

- Contact Lutron first for applications using foil-backed or metallic ceiling tiles.

NOTE: Wireless sensors and controls must be located within 60 ft (18 m) line of sight, or 30 ft (9 m), through walls, of the associated control module. The 60 ft (18 m) range is not reduced by a ceiling tile obstruction.

3 VIVE POWPAK RELAY MODULE W/ SOFTSWITCH - RANGE DIAGRAM
NO SCALE

System Diagram

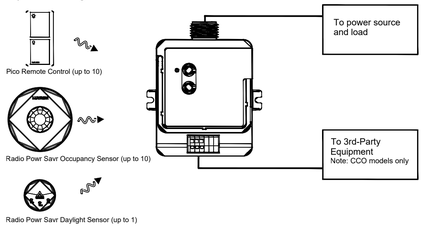

WIRING DIAGRAM (RMJS- AND URMJS- MODELS)

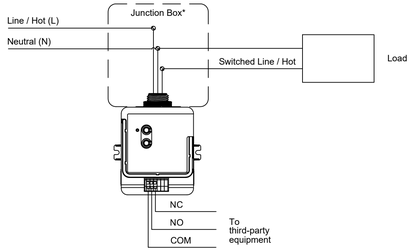

* NOTE: The control module mounts to the exterior of a U.S.-style junction box.

4 VIVE POWPAK RELAY MODULE W/ SOFTSWITCH - SYSTEM AND WIRING DIAGRAMS
NO SCALE

System Diagram

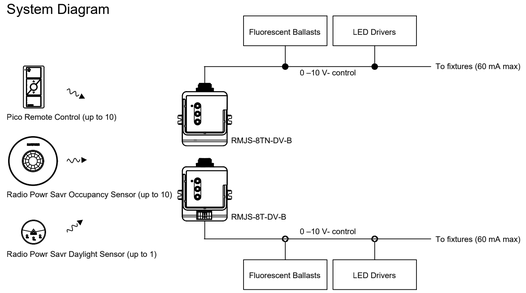

Wiring Schematic

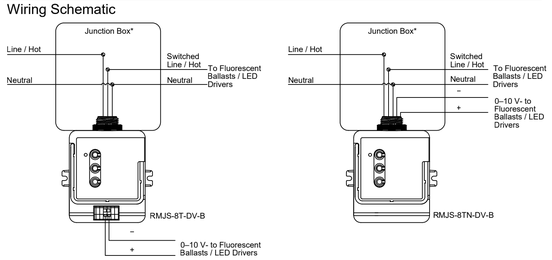

* NOTE: The control module mounts to the exterior of a U.S.-style junction box.

5 VIVE POWPAK DIMMING MODULE - SYSTEM AND WIRING DIAGRAMS
NO SCALE

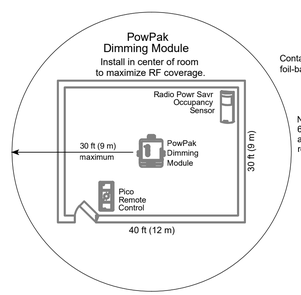

Contact Lutron first for applications using foil-backed or metallic ceiling tiles.

NOTE: Wireless sensors and controls must be located within 60 ft (18 m) line of sight, or 30 ft (9 m), through walls, of the associated control module. The 60 ft (18 m) range is not reduced by a ceiling tile obstruction.

6 VIVE POWPAK DIMMING MODULE - RANGE DIAGRAM
NO SCALE

COPYRIGHT 2021 MODULUS ARCHITECTS

MODULUS
ARCHITECTS
AND LAND USE
PLANNING
8220 SAN PEDRO DR NE
SUITE 520
ALBUQUERQUE, NEW
MEXICO 87113
PHONE (505) 338-1499
FAX (505) 338-1498

COLORADO LICENSED
THOMAS F. RUESKE
63540
PROFESSIONAL ENGINEER
2/13/2024
23303

PROJECT TITLE

TESLA COLLISION CENTER

6951
S.BLACKHAWK
STREET,
BUILDING 1,
CENTENIAL. CO
80112

PROJECT MANAGER

DRAWN BY:

ISSUE / REVISION

SHEET TITLE

LIGHTING DETAILS

SCALE:

JOB NO.

SHEET NUMBER

E2.02

100% CDs

THE RESPONSE GROUP, INC.
An Electrical Engineering Corporation
6705 Academy N.E. Suite B
Albuquerque, New Mexico 87109
Phone:(505) 323-7629 Fax:(505) 323-7594
E-mail: theresponsegroup@trg-inc.net

COPYRIGHT 2021 MODULUS ARCHITECTS

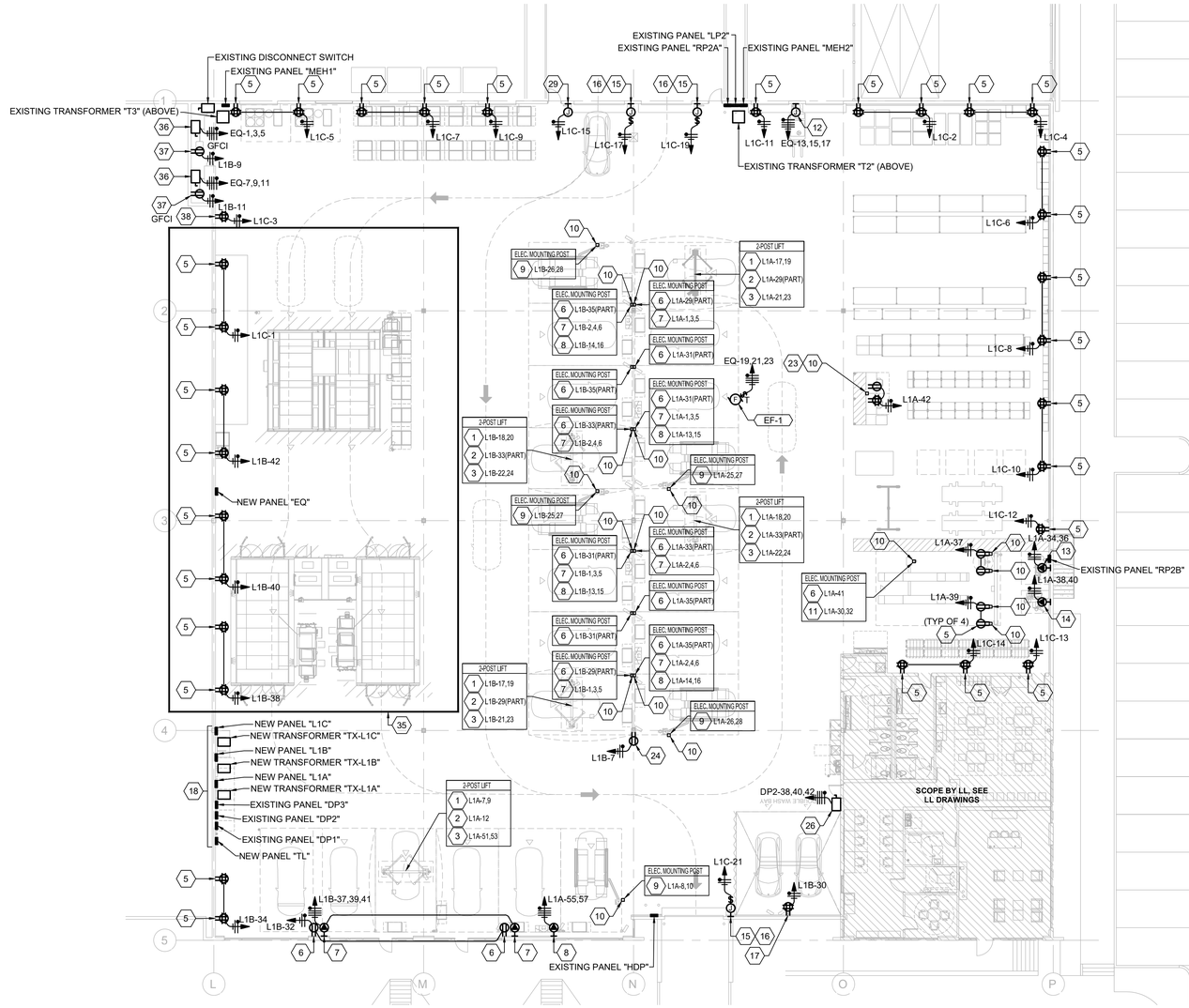

1 POWER PLAN

SCALE: **1/16" = 1'-0"**

GENERAL NOTES

A. REFER TO E0.01 FOR ADDITIONAL GENERAL NOTES.

B. FIELD VERIFY EXACT LOCATION & ELECTRICAL REQUIREMENTS OF ALL HVAC EQUIPMENT WITH MECHANICAL CONTRACTOR PRIOR TO ORDERING RELATED ELECTRICAL EQUIPMENT.

C. COORDINATE ALL ROOF PENETRATIONS WITH THE LANDLORD. WRITTEN PERMISSION FROM THE LANDLORD SHALL BE RECEIVED PRIOR TO ANY WORK BEING PERFORMED. ALL ROOF PENETRATIONS TO BE BY LANDLORD'S CONTRACTOR AT TENANT'S ELECTRICAL CONTRACTOR'S EXPENSE.

D. ANY BRANCH CIRCUIT THAT SERVE NEW AIR COMPRESSORS, SHALL HAVE A "FULL SIZED" NEUTRAL CONDUCTOR (MATCHING THE CONDUCTOR SIZE OF THE CURRENT CARRYING CONDUCTORS INSTALLED).

E. RECEPTACLES IN AUTO SERVICE AREAS (AND OTHER APPLICABLE AREAS IDENTIFIED BY ARTICLE 210.8) SHALL BE PROTECTED W/ GFCI DEVICES (RECEPTACLE OR BREAKER), IN ACCORDANCE WITH THE CURRENT ADOPTED VERSION OF N.E.C. CODE & ANY LOCAL AMENDMENTS . SEE GENERAL NOTES ON SHEET E0.01 FOR ADDITIONAL INFORMATION/ REQUIREMENTS.

F. ALL UNDERGROUND CONDUITS SHALL BE INSTALLED IN ACCORDANCE WITH N.E.C. 300.5.

G. ANY PROPOSED TRENCHING FOR ELECTRICAL CONDUITS SHOWN PLANS SHALL BE CONSIDERED AS SUGGESTED TRENCH ROUTING - CONTRACTOR TO ADJUST AS REQUIRED DUE TO SITE CONDITIONS. COORDINATE ROUTING OF ALL UNDERGROUND CONDUITS WITH TESLA CONSTRUCTION MANAGER PRIOR TO TRENCHING.

H. WHEN ROUTING CONDUITS, HORIZONTAL RACEWAYS CAN BE INSTALLED AT A MINIMUM OF 15'-0"A.F.F.. HORIZONTAL RACEWAYS SHALL BE SUPPORTED/BRACED/TRAPEZE MOUNTED DIRECTLY FROM STRUCTURE IN ACCORDANCE WITH THE CURRENT LOCALLY ADOPTED VERSION OF THE N.E.C. (PROVIDE ALL NECESSARY BRACING AS REQUIRED). ROUTING OF HORIZONTAL RACEWAYS (NOT INSTALLED TIGHT TO STRUCTURE OR ALONG EXTERIOR WALLS) SHALL BE APPROVED BY TESLA'S CONSTRUCTION MANAGER, ESPECIALLY OVER WORK BAY AREAS. (NOTE RACEWAYS NEAR UNDERSIDE OF ROOF DECK SHALL BE INSTALLED WITH CLEARANCE AS REQUIRED BY ARTICLE 300.4)

I. USE OF SUSPENDED FLEXIBLE CORDS (SO CORDS) IS NOT THE PREFERRED METHOD FOR PROVIDING CONNECTION/ EXTENDING CONDUCTORS FROM STRUCTURE ABOVE TO EQUIPMENT/ELECTRICAL DEVICES BELOW AND USE OF SUSPENDED FLEXIBLE CORDS, IS PROHIBITED UNLESS APPROVED, IN WRITING, BY TESLA'S CONSTRUCTION MANAGER. ALL (VERTICAL) CONDUCTORS SHALL BE INSTALLED IN RACEWAYS (EMT, IMT, GRC, RMC, OR OTHER TESLA APPROVED) FROM STRUCTURE ABOVE TO EQUIPMENT/ELECTRICAL DEVICES BELOW. CONDUITS SHALL BE INSTALLED AND SUPPORTED IN ACCORDANCE WITH CURRENT LOCALLY ADOPTED ELECTRICAL CODE, INCLUDING ALL LOCAL AMENDMENTS.

KEYED NOTES

1. NEMA 14-50 RECEPTACLE WITH 4 SQ. INDUSTRIAL RAISED COVER. MOUNT THE OUTLET ON THE SIDE (OUTSIDE FACE) OF THE (LEFT) LIFT VERTICAL POST AT APPROXIMATELY 48" AFF TO TOP OF THE BOX (MOUNTED UNDER LIFT "IDLER BOX". VERIFY EXACT MOUNTING LOCATION IN FIELD.). RECEPTACLE SHALL BE INSTALLED SUCH THAT GROUNDING TO BE ON TOP.
2. NEMA 5-20 QUAD BOX 20A, 120V WITH 4 SQ INDUSTRIAL RAISED COVER. MOUNT THE OUTLET ON THE SIDE (OUTSIDE FACE) OF THE (RIGHT) LIFT VERTICAL POST AT APPROXIMATELY 42" AFF TO TOP OF THE BOX (MAXIMUM, MOUNTED UNDER THE LIFT "POWER BOX" AND BELOW 2-POST LIFT MANUAL MOTOR STARTER SWITCH. VERIFY EXACT MOUNTING LOCATION IN FIELD).
3. 30A, 208V,1PH, MANUAL MOTOR STARTER (EATON 3032W OR EQUAL) FOR TWO-POST LIFT POWER (CHALLENGER LIFT #VLE08, #LE10, #VLE10 OR EQUIVALENT). MOUNT THE MOTOR STARTER SWITCH ON THE SIDE (OUTSIDE FACE) OF THE (RIGHT) LIFT VERTICAL POST AT 48" AFF TO TOP OF THE BOX (MAXIMUM, MOUNTED UNDER THE LIFT "POWER BOX"-VERIFY EXACT MOUNTING LOCATION IN FIELD).
4. NOT USED.
5. GENERAL PURPOSE (NEMA 5-20R) QUADPLEX RECEPTACLES IN SERVICE AREA, TO BE LOCATED EVERY 15' O.C. (AND AS SHOWN IN PARTS AREAS), MOUNTED AT 18" A.F.F..
6. WORK BAY/TOOL RECEPTACLE: PROVIDE (1) NEMA 5-20R QUADPLEX RECEPTACLE. SURFACE MOUNTED ON WALL/ELECTRICAL MOUNTING POST AT 44" A.F.F..
7. WELDING RECEPTACLE: PROVIDE (1) NEMA 15-60R RECEPTACLE. SURFACE MOUNTED ON WALL/ELECTRICAL MOUNTING POST, AT 44" A.F.F.. FIELD VERIFY LOCATION WITH TESLA'S CONSTRUCTION MANAGER PRIOR TO INSTALLATION.
8. NEMA 14-50 RECEPTACLE WITH 4 SQ. INDUSTRIAL RAISED COVER. SURFACE MOUNTED ON WALL/ELECTRICAL MOUNTING POST, AT 44" A.F.F.. FIELD VERIFY LOCATION WITH TESLA'S CONSTRUCTION MANAGER PRIOR TO INSTALLATION.
9. SCISSOR LIFT CONSOLE (POWER UNIT): PROVIDE A 30A, 208V,1PH, MANUAL MOTOR STARTER (EATON 3032W OR EQUAL) FOR SCISSOR LIFT, MOUNTED TO ELECTRICAL MOUNTING POST AT 48" TOP OF BOX VERIFY EXACT MOUNTING LOCATION & REQUIREMENTS WITH TESLA REP. PRIOR TO ROUGH-IN.
10. ELECTRICAL MOUNTING POST (UNISTRUT OR APPROVED EQUAL). COORDINATE FINAL PLACEMENT OF ELECTRICAL MOUNTING POST WITH TESLA CONSTRUCTION MANAGER, IN FIELD, PRIOR TO INSTALLATION. CONTRACTOR TO INSTALL ELECTRICAL DEVICES SHOWN/NOTED AT EACH ELECTRICAL MOUNTING POST LOCATION. SEE "TYPICAL ELECTRICAL MOUNTING POST - ELECTRICAL LAYOUT DETAILS", SHEET E3.04, FOR EXAMPLES OF ELECTRICAL DEVICE PLACEMENT AND ADDITIONAL REQUIREMENTS. CIRCUIT DEVICES AS INDICATED. WHEN APPLICABLE, REFER LISTED KEYED NOTES FOR ADDITIONAL MOUNTING AND DEVICE REQUIREMENTS. ROUTE CONDUIT(S) FROM CEILING/JOIST SPACE ABOVE. PROVIDE CODE COMPLIANT BRACING/MOUNTING HARDWARE FOR ELECTRICAL MOUNTING POST, ELECTRICAL DEVICES AND CONDUITS BEING INSTALLED. REFER TO ARCHITECTURAL AND STRUCTURAL PLANS FOR ADDITIONAL REQUIREMENTS.
11. PROVIDE POWER CONNECTION TO ALIGNMENT LIFT, COORDINATE ALL REQUIREMENTS WITH TESLA PROJECT MANAGER. PROVIDE JUNCTION BOX AND HARDWIRE CONNECTION TO LIFT CONSOLE (PER MANUFACTURER'S SPECIFICATIONS) AND PROVIDE A LOCK-OUT/TAG-OUT DEVICE ON SERVING CIRCUIT BREAKER IN PANEL (OR LOCAL DISCONNECT SWITCH IF REQUIRED BY AHJ). VERIFY EXACT MOUNTING LOCATION & REQUIREMENTS WITH TESLA REP. PRIOR TO ROUGH-IN.
12. PROVIDE HARDWIRED CONNECTION FOR FORKLIFT CHARGER. COORDINATE EXACT VOLTAGE REQUIREMENT, AND LOCATION WITH TESLA CONSTRUCTION MANAGER PRIOR TO ROUGH-IN. (NOTE: LOCK-OUT/ TAG-OUT DEVICE MUST BE INSTALLED ON CIRCUIT BREAKER IN SERVING PANEL.)
13. NEMA L6-20 RECEPTACLE WITH 4 SQ. INDUSTRIAL RAISED COVER FOR WHEEL BALANCER. MOUNT THE OUTLET ON THE WALL/MOUNTING POST AT 48" A.F.F., TO TOP OF THE BOX. VERIFY CORD AND EXACT RECEPTACLE TYPE AND REQUIREMENTS WITH EQUIPMENT BEING INSTALLED - ADJUST CIRCUIT BREAKER AND WIRING ACCORDINGLY.)
14. NEMA L6-20 RECEPTACLE WITH 4 SQ. INDUSTRIAL RAISED COVER FOR TIRE CHANGER. MOUNT THE OUTLET ON THE WALL/MOUNTING POST AT 48" A.F.F., TO TOP OF THE BOX. (NOTE: VERIFY CORD AND EXACT RECEPTACLE TYPE AND REQUIREMENTS WITH EQUIPMENT BEING INSTALLED - ADJUST CIRCUIT BREAKER AND WIRING ACCORDINGLY.)
15. 20A, 120V, SPST MOTOR RATED SWITCH FOR THE MOTORIZED ROLL-UP DOOR. MOUNT THE SWITCH AT APPROX. 10' AFF, NEXT TO THE MOTOR.
16. UP/DOWN CONTROLLER FOR THE ROLL-UP DOOR. MOUNT THE CONTROLLER AT 48" A.F.F., TO THE TOP OF THE BOX. SEE MANUFACTURER'S CONTROL DIAGRAM & WIRING INSTRUCTIONS. COORDINATE ADDITIONAL REQUIREMENTS WITH OVERHEAD DOOR INSTALLER/EQUIPMENT BEING INSTALLED. SEE DATA PLANS, E6.XX SERIES SHEETS, FOR ADDITIONAL INFORMATION/REQUIREMENTS.
17. WASH BAY RECEPTACLE: PROVIDE QUAD NEMA 5-20R WEATHER RESISTANT (WR) RECEPTACLE WITH WEATHER PROOF IN-USE COVER & PROVIDE GFCI PROTECTION IN PANEL. FIELD VERIFY EXACT MOUNTING LOCATION WITH TESLA CONSTRUCTION MANAGER.
18. PROVIDE & MAINTAIN REQUIRED WORK CLEARANCE AROUND/IN FRONT OF ELECTRICAL EQUIPMENT.
19. NOT USED.
20. NOT USED.)
21. NOT USED.
22. PROVIDE A DUPLEX NEMA 5-20R WEATHER RESISTANT (WR) RECEPTACLE WITH WEATHER PROOF IN-USE COVER & PROVIDE GFCI PROTECTION IN PANEL.
23. CONTRACTOR FIELD VERIFY EXACT MOUNTING LOCATIONS OF ALL DESK, POWER AND DATA RECEPTACLES (REFER TO ELECTRICAL SPECIAL SYSTEMS PLANS, FOR DATA RECEPTACLE REQUIREMENTS). (NOTE: POWER AND DATA WIRING SHALL BE ROUTED IN SEPARATE CONDUITS FROM CEILING/JOIST SPACE ABOVE). COORDINATE EXACT MOUNTING HEIGHT OF OUTLETS WITH TESLA CONSTRUCTION MANAGER (NOTE: POWER OR DATA OUTLETS SHALL MOUNTED/RACKED AT 44" A.F.F. UNLESS DIRECTED OTHERWISE.) PROVIDE ALL NECESSARY DEVICES/BRACING FOR A COMPLETE AND CODE COMPLIANT INSTALLATION.
24. PROVIDE POWER RECEPTACLE FOR SHOP MONITOR. CONFIRM MOUNTING HEIGHT OF MONITOR AND RECEPTACLES WITH ARCHITECTURAL DETAILS. (NOTE: WHEN MONITOR IS SUSPENDED FROM STRUCTURE, PROVIDE FLEXIBLE CONDUIT FROM JUNCTION BOX AT CEILING STRUCTURE, TO SURFACE MOUNTED RECEPTACLES BEHIND MONITOR. PROVIDE ALL NECESSARY BRACING. REFER TO ELECTRICAL LOW VOLTAGE PLANS, E6.XX SERIES SHEETS FOR DATA RECEPTACLE REQUIREMENTS. COORDINATE POWER AND DATA RECEPTACLE MOUNTING LOCATIONS IN FIELD.)
25. SURFACE MOUNTED DUPLEX (NEMA 5-20R) COLUMN RECEPTACLE. MOUNT RECEPTACLE 4'-3" A.F.F (CENTER OF BOX). CONTRACTOR TO DETERMINE ROUTING IN FIELD AND ADJUST FEEDER (CONDUIT/CONDUCTORS) FOR VOLTAGE DROP AS REQUIRED. CIRCUIT AS INDICATED.
26. CONTRACTOR TO PROVIDE A JUNCTION BOX & LOCAL DISCONNECT (PER MANUFACTURER'S SPECIFICATIONS) FOR HARDWIRE CONNECTION TO WATER HEATER. FIELD VERIFY EXACT MOUNTING HEIGHT/LOCATION OF ELECTRICAL DEVICES WITH PLUMBING INSTALLER PRIOR ROUGH-IN. PROVIDE ALL NECESSARY DEVICES FOR A CODE COMPLIANT INSTALLATION.
27. NOT USED.
28. NOT USED.
29. CONTRACTOR TO PROVIDE A HARDWIRED CONNECTION TO RECEIVING DOOR, DOOR BELL EQUIPMENT (LOW VOLTAGE TRANSFORMER). VERIFY EXACT MOUNTING LOCATION WITH EQUIPMENT BEING INSTALLED.
30. NOT USED.
31. NOT USED..
32. NOT USED.
33. NOT USED.
34. REFER TO "ENLARGED POWER PLAN" ON SHEET E3.00A FOR ADDITIONAL INFORMATION WITHIN THIS AREA.
35. REFER TO "ENLARGED POWER PLAN" ON SHEET E3.01 FOR ADDITIONAL INFORMATION WITHIN THIS AREA.
36. NEMA 1, 480V, 3P, 60A, DISCONNECT FOR THE COMPRESSOR. PROVIDE HARD WIRE & FLEXIBLE CONNECTION TO THE EQUIPMENT MOUNT THE SWITCH ON WALL AT 60" AFF TO TOP OF THE BOX.
37. PROVIDE RECEPTACLE FOR AIR DRYER. COORDINATE EXACT REQUIREMENTS & LOCATION WITH TESLA PROJECT MANAGER PRIOR TO ROUGH-IN.
38. COORDINATE EXACT MOUNTING LOCATION OF AIR COMPRESSOR WALL CONTROL WITH EQUIPMENT INSTALLER PRIOR TO ROUGH-IN. FIELD VERIFY ADDITIONAL REQUIREMENTS. (NOTE: IF UNIT INSTALLED, NOT PROVIDED WITH WALL CONTROL, CONTRACTOR SHALL STILL INSTALL RECEPTACLE FOR EQUIPMENT MAINTENANCE. REFER TO ELECTRICAL LOW VOLTAGE PLANS, E6.XX SERIES SHEETS FOR DATA RECEPTACLE REQUIREMENTS. COORDINATE POWER AND DATA RECEPTACLE MOUNTING LOCATIONS IN FIELD.)

MODULUS ARCHITECTS
AND LAND USE PLANNING
8220 SAN PEDRO DR NE
SUITE 520
ALBUQUERQUE, NEW MEXICO 87113
PHONE (505) 338-1499
FAX (505) 338-1498

COLORADO LICENSED
THOMAS F. RUEHLE
63540
PROFESSIONAL ENGINEER
2/13/2024
23303

PROJECT TITLE

TESLA COLLISION CENTER

6951
S.BLACKHAWK
STREET,
BUILDING 1,
CENTENIAL. CO
80112

PROJECT MANAGER

DRAWN BY:

ISSUE / REVISION

SHEET TITLE

POWER PLAN

SCALE:

JOB NO.

SHEET NUMBER

E3.00

THE RESPONSE GROUP, INC.
An Electrical Engineering Corporation
6705 Academy N.E. Suite B
Albuquerque, New Mexico 87109
Phone:(505) 323-7629 Fax:(505) 323-7594
E-mail: theresponsegroup@trg-inc.net

100% CDs

COPYRIGHT 2021 MODULUS ARCHITECTS

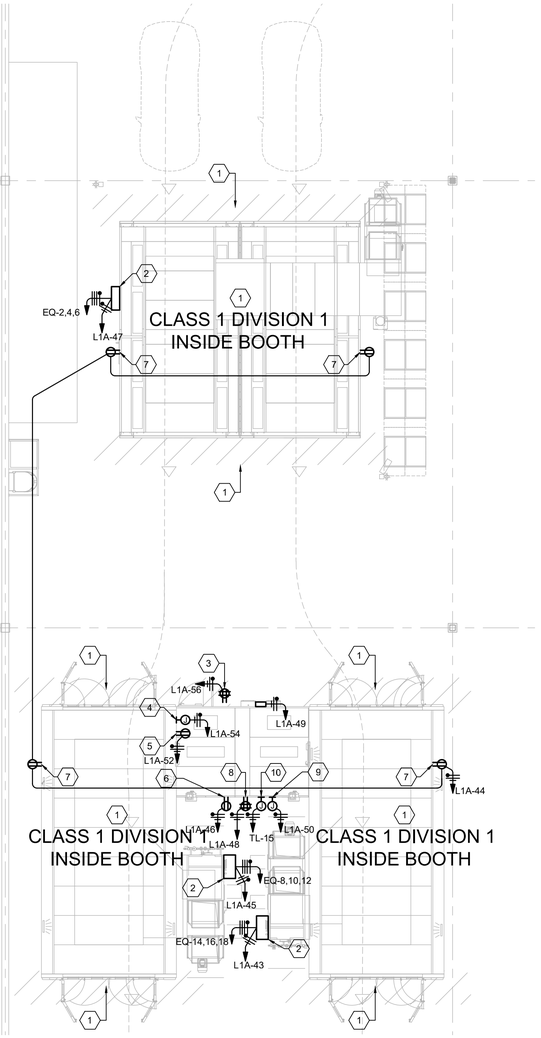

1 ENLARGED POWER PLAN - PAINT BOOTH

SCALE: **1/8" = 1'-0"**

GENERAL NOTES

A. REFER TO SHEET E0.01 & E3.00 FOR ADDITIONAL GENERAL NOTES.

B. VERIFY WITH TESLA PROJECT REP. IF MIXING ROOM AND PAINT/ SPRAY BOOTHS ARE CLASSIFIED AS A HAZARDOUS OR NON- HAZARDOUS LOCATION AND PROVIDE ALL WIRING, WIRING DEVICES / CONDUIT / CONDUIT SEAL(S) AS APPROPRIATE AND REQUIRED PER EACH ROOM/BOOTH CLASSIFICATION. THIS NOTE SHALL APPLY TO ALL BRANCH CIRCUITING AND CONNECTIONS EXTENDED TO THE MIXING ROOM, PAINT BOOTHS OR PREP BOOTH THAT ARE NOT WIRED BY THE MANUFACTURER.

C. IF THE PAINT BOOTHS/PREP BOOTH ARE CLASSIFIED AS A HAZARDOUS ELECTRICAL LOCATIONS PER TESLA INFORMATION - CLASS 1, DIV1. ALL WORK IN THE PAINT BOOTHS, PREP BOOTH SHALL BE PER CODE REQUIREMENTS FOR THAT HAZARDOUS RATING.

D. IF THE THE MIXING ROOM/AREAS 3' OUTSIDE BOOTH/MIXING ROOM DOORS OR OPENINGS, ARE CLASSIFIED AS A HAZARDOUS ELECTRICAL LOCATION PER TESLA INFORMATION - CLASS 1, DIV 2. ALL WORK IN MIXING ROOM,PAINT BOOTHS, PREP BOOTH SHALL BE PER CODE REQUIREMENTS FOR THAT HAZARDOUS RATING.

E. INSIDE MIX ROOM: (TYPICAL) INSTALL QTY 2 (TWO), 120V, 20A, 1PH. CIRCUIT, CLASS 1 DIVISION 2 EXPLOSION PROOF DROPS, TO POWER PAINT MIX BANK & PAINT SHAKER. QTY 1 (ONE) OF THESE TO BE HARDWIRED (JUNCTION BOX) FOR THE PAINT MIX BANK & WITH QTY 1 (ONE) RECEPTACLE FOR PAINT SHAKER. TYPICALLY 24" AFF. VERIFY EXACT MOUNTING LOCATION IN FIELD PRIOR TO INSTALLATION.

F. WIRING, EQUIPMENT & LIGHTING LOCATED WITHIN AND DIRECTLY OUTSIDE CLASS 1, DIVISION1 AREAS OR CLASS 1. DIVISION 2 AREAS(AND OTHER APPLICABLE CLASSIFIED AREAS, SPECIFIED IN ARTICLE 516) SHALL CONFIRM TO APPLICABLE PROVISIONS OF ARTICLES 501 AND 516 OF THE LATEST LOCALLY ADOPTED VERSION OF ELECTRIC CODE.

G. TYPICAL EXPLOSION PROOF MATERIAL: HUBBELL-KILLARK, FXB-5, EDS - TYPE, MOUNTING BODIES, BOXES. HUBBELL-KILLARK XS1C TUMBLER SWITCH XS COVER W/ 1P 20A 120/277V OR SIMILAR.

H. WHEN NOT SUPPLIED WITH UNIT, CONTRACTOR TO PROVIDE LIGHT SWITCH(ES), EXTERNAL TO THE BOOTHS/MIX ROOM. SWITCH(ES) SHALL BE INSTALLED GREATER THAN 3' FROM ANY DOOR OR OPENING, TO AVOID CLASSIFIED HAZARDOUS AREAS. (NOTE: ANY SWITCH INSTALLED IN AREA CLASSIFIED HAZARDOUS AREA SHALL BE LISTED FOR THE CLASSIFICATION AREA IT IS INSTALLED)

I. THE MIX ROOM FAN(S) MUST BE PERMANENTLY POWERED, NOT VIA AN OPERATOR-ACCESSIBLE SWITCH.

J. ALL RECEPTACLES AND SWITCHES EXTERNAL TO PAINT BOOTH/PREP BOOTH/MIX ROOM SHALL BE INSTALLED GREATER THAN 3' FROM ANY PAINT BOOTH/MIXING ROOM DOOR OR OPENING, TO AVOID CLASSIFIED HAZARDOUS AREAS. ALL DEVICES SHALL BE LISTED FOR THE CLASSIFIED HAZARDOUS AREA, IN WHICH THEY ARE INSTALLED.

K. PAINT BOOTHS AND PRIME/PREP STATIONS (CTOFS) POWER SUPPLIES AS PER THE PAINT BOOTH VENDORS DOCUMENTATION PACKAGE (CONTRACTOR PACKAGE AND/OR SPECIFIC DRAWINGS). THIS WILL INCLUDE THE MAIN FAN MOTORS, LIGHTS, CONTROLLER(S), ETC. INCLUDING THE PAINT MIX ROOM REQUIREMENTS (FANS PERMANENTLY ON AND LIGHTS (INCLUDING LIGHT SWITCH LESS THAN 3 FEET FROM ANY OPENING).

L. ALL PAINT BOOTHS, CTOFS AND MIX ROOM (MOTOR POWER FEEDS, LIGHTS, FANS, ETC.), SHALL BE INSTALLED PER THE VENDOR DRAWINGS AND IN COMPLIANCE WITH THE CURRENT LOCALLY ADOPTED ELECTRICAL CODE.

M. CO MONITOR(S): QTY 1 (ONE) DUPLEX 120V (NEMA 5-20R) POWER OUTLET AT EACH AIR FILTER LOCATION. RECEPTACLES WILL BE REQUIRED WITHIN 3' OF THE TRIPLE-STAGE FILTER (TYPICALLY SATA 484 UNITS) AND CO MONITOR (TYPICALLY SATA UNITS). ONE FILTER IS PROVIDED IN THE AIR SYSTEM FOR EACH CTOF (OR PAIR) AND FOR EACH PAINT BOOTH (OR PAIR). CO MONITORS TYPICALLY LOCATED ON THE MIDDLE OF THE EXTERNAL SIDE WALL OF THE BOOTHS, BETWEEN THE TWO BOOTHS THEY ARE FEEDING (WHERE TWO ARE INSTALLED OR WILL BE INSTALLED). FILTER SAMPLE TUBE TO BE TAPPED OFF FROM THE TRIPLE FILTER OUTPUT PIPE, NOT FROM THE THIRD FILTER MANIFOLD. CO MONITORS SHALL POWERED FROM A DEDICATED CIRCUIT. EACH CO MONITOR HAS A NEMA 5-15 TO IEC320 C13 CORD, APPROX. 3' LONG

N. COORDINATE INSTALLATION AND FIELD VERIFY ALL ELECTRICAL REQUIREMENTS FOR VENTILATION SYSTEM WITH PAINT BOOTH/ PREP-STATION SUPPLIER AND MECHANICAL CONTRACTOR. (NOTE: ROOF (OR WALL) PENETRATIONS WILL BE NECESSARY FOR THE INLET AND EXHAUST DUCTWORK FROM EACH BOOTH OR PREP-STATION (CTOF OR LFW). THE PAINT BOOTH SUPPLIER OR INSTALLER (OR THEIR SUBCONTRACTORS) WILL SUPPLY AND STACK ALL MAJOR DUCTWORK. THE MIX ROOM WILL ALSO REQUIRE A VENTILATION DUCT AND SOMETIMES A CHIMNEY (THIS WILL DEPEND UPON THE TYPE OF BOOTH DEPLOYED IN EACH CASE).)

O. WHEN ROUTING CONDUITS, HORIZONTAL RACEWAYS CAN BE INSTALLED AT A MINIMUM OF 15'-0" A.F.F., HORIZONTAL RACEWAYS SHALL BE SUPPORTED/BRACED/TRAPEZE MOUNTED DIRECTLY FROM STRUCTURE IN ACCORDANCE WITH THE CURRENT LOCALLY ADOPTED VERSION OF THE N.E.C. (PROVIDE ALL NECESSARY BRACING AS REQUIRED). ROUTING OF HORIZONTAL RACEWAYS (NOT INSTALLED TIGHT TO STRUCTURE OR ALONG EXTERIOR WALLS) SHALL BE APPROVED BY TESLA'S CONSTRUCTION MANAGER, ESPECIALLY OVER WORK BAY AREAS. (NOTE RACEWAYS NEAR UNDERSIDE OF ROOF DECK SHALL BE INSTALLED WITH CLEARANCE AS REQUIRED BY ARTICLE 300.4).

P. REFER TO SHEET E3.00 FOR LOCATIONS OF PANELBOARDS.

KEYED NOTES

1. BOUNDARY OF ELECTRICALLY HAZARDOUS/CLASSIFIED HAZARDOUS AREAS. CLASS 1, DIV. 1 AREA INCLUDES THE INTERIOR OF THE BOOTHS. THE AREA 3 FEET OUTSIDE OF ANY BOOTH/MIXING ROOM DOOR OR OPENING (INDICATED BY HATCHING ON PLAN) AND THE INTERIOR OF THE MIXING ROOM, ARE CLASS 1 DIVISION 2 AREAS. VERIFY BOUNDARY OF HAZARDOUS AREAS WITH OWNER'S PROJECT REP AND / OR BOOTH MANUFACTURER / SHOP DRAWINGS. PROVIDE EQUIPMENT/DEVICES LISTED FOR USE IN HAZARDOUS AREAS AS NEEDED. LOCATE ALL ELECTRICAL EQUIPMENT/DEVICES (POWER DEVICES, DATA DEVICES, AND LIGHTING CONTROL DEVICES), OUTSIDE CLASSIFIED HAZARDOUS AREAS, IF POSSIBLE. PAINT BOOTH VENDOR TO PROVIDE CUTSHEETS FOR LISTED EQUIPMENT TO INCLUDE IN SUBMITTAL.

2. NEW SPRAY/PREP BOOTH/MIXING ROOM CONTROL PANEL SUPPLIED WITH UNIT AND INSTALLED IN FIELD. CONTRACTOR TO COORDINATE EXACT MOUNTING LOCATION OF CONTROL PANEL WITH TESLA'S CONSTRUCTION MANAGER PRIOR TO INSTALLATION. PROVIDE ALL CONDUIT, WIRING, AND CONNECTIONS FOR EXHAUST FANS, POWER, LIGHTING, AND CONTROLS TO COMPLETE INSTALLATION OF SPRAY/PREP BOOTH/MIXING ROOM PER MANUFACTURER'S SPECIFICATIONS AND THAT THE UNIT IS FULLY OPERATIONAL. FIELD VERIFY CONNECTION POINTS. VERIFY AND COORDINATE ALL REQUIREMENTS WITH PAINT BOOTH VENDOR AND TESLA REPRESENTATIVE. CONTROL PANELS MUST BE LOCATED OUTSIDE ANY AREA CLASSIFIED AS A HAZARDOUS ZONE (SEE KEYED NOTE #1 FOR ADDITIONAL INFORMATION/REQUIREMENTS). NO "SPARKING DEVICES" SHALL BE INSTALLED HATCHED AREA SHOWN IN FRONT CONTROL PANEL. SEE PAINT BOOTH GENERAL NOTES FOR ADDITIONAL INFORMATION/REQUIREMENTS.) PROVIDE A LOCK-OUT/TAG-OUT DEVICE ON SERVING CIRCUIT BREAKER IN PANEL (OR LOCAL DISCONNECT SWITCH AT CONTROL PANEL, IF REQUIRED BY AHJ).

3. PROVIDE 20A, 120V/1P, (NEMA 5-20) QUADPLEX RECEPTACLE WITH BRANCH CIRCUIT TO LOCATION OUTSIDE MIXING ROOM FOR "AXALTA" COMPUTER. COORDINATE FINAL LOCATION AND EXACT REQUIREMENT WITH TESLA REP AND PROVIDE ALL CONDUIT, WIRING AND CONNECTIONS TO COMPLETE INSTALLATION. (NOTE: WHEN POSSIBLE, INSTALL ELECTRICAL DEVICES GREATER THAN 3' FROM ANY PAINT BOOTH/PREP BOOTH DOOR OR OPENING, TO AVOID CLASSIFIED HAZARDOUS AREAS. ALL ELECTRICAL DEVICES SHALL BE LISTED FOR THE CLASSIFIED HAZARDOUS AREA, IN WHICH THEY ARE INSTALLED. SEE KEY NOTE #1, FOR ADDITIONAL INFORMATION.)

4. PROVIDE 20A, 120V/1P JUNCTION BOX WITH BRANCH CIRCUIT TO LOCATION INSIDE MIXING ROOM FOR PAINT MIX BANK. COORDINATE FINAL LOCATION AND EXACT REQUIREMENT WITH TESLA REP. AND PROVIDE ALL CONDUIT, WIRING AND CONNECTIONS TO COMPLETE INSTALLATION. (NOTE: ALL ELECTRICAL DEVICES SHALL BE LISTED FOR THE CLASSIFIED HAZARDOUS AREA, IN WHICH THEY ARE INSTALLED. SEE KEY NOTE #1, FOR ADDITIONAL INFORMATION.)

5. PROVIDE 20A, 120V/1P (NEMA 5-20) DUPLEX RECEPTACLE WITH BRANCH CIRCUIT TO LOCATION INSIDE MIXING ROOM FOR PAINT SHAKER. COORDINATE FINAL LOCATION AND EXACT REQUIREMENT WITH TESLA REP. AND PROVIDE ALL CONDUIT, WIRING AND CONNECTIONS TO COMPLETE INSTALLATION. (NOTE: ALL ELECTRICAL DEVICES SHALL BE LISTED FOR THE CLASSIFIED HAZARDOUS AREA, IN WHICH THEY ARE INSTALLED. SEE KEY NOTE #1, FOR ADDITIONAL INFORMATION.)

6. PROVIDE (NEMA 5-20) DUPLEX RECEPTACLE WITH BRANCH CIRCUIT TO LOCATION OF EXPLOSION PROOF DRYER. COORDINATE FINAL LOCATION AND EXACT REQUIREMENTS WITH TESLA REP. AND PROVIDE ALL CONDUIT, WIRING AND CONNECTIONS TO COMPLETE INSTALLATION. (NOTE: RECEPTACLE FOR EXPLOSION PROOF DRYER SHALL BE INSTALLED OUTSIDE MIXING ROOM, MOUNTED ON EXTERIOR WALL OF PAINT BOOTH. (WHEN POSSIBLE) INSTALL ELECTRICAL DEVICES GREATER THAN 3' FROM ANY PAINT BOOTH/PREP BOOTH DOOR OR OPENING, TO AVOID CLASSIFIED HAZARDOUS AREAS. ALL ELECTRICAL DEVICES SHALL BE LISTED FOR THE CLASSIFIED HAZARDOUS AREA, IN WHICH THEY ARE INSTALLED. SEE KEY NOTE #1, FOR ADDITIONAL INFORMATION.)

7. PROVIDE (NEMA 5-20) DUPLEX RECEPTACLE AND BRANCH CIRCUIT TO LOCATION OF CO MONITOR. COORDINATE FINAL LOCATION WITH TESLA REP. AND PROVIDE ALL REQUIRED CONDUIT, WIRING AND CONNECTIONS TO COMPLETE INSTALLATION. SEE PAINT BOOTH GENERAL NOTES AND PAINT BOOTH SHOP DRAWINGS FOR ADDITIONAL REQUIREMENTS/INFORMATION. (NOTE: LOCATION OF RECEPTACLE BASED ON LOCATION OF AIR FILTER. (WHEN POSSIBLE) INSTALL ELECTRICAL DEVICES GREATER THAN 3' FROM ANY PAINT BOOTH/PREP BOOTH DOOR OR OPENING, TO AVOID CLASSIFIED HAZARDOUS AREAS. ALL ELECTRICAL DEVICES SHALL BE LISTED FOR THE CLASSIFIED HAZARDOUS AREA, IN WHICH THEY ARE INSTALLED. SEE KEY NOTE #1, FOR ADDITIONAL INFORMATION.)

8. PROVIDE (NEMA 5-20R) QUADPLEX RECEPTACLE WITH BRANCH CIRCUIT OUTSIDE OF MIX ROOM. FIELD VERIFY FINAL LOCATION AND EXACT REQUIREMENTS WITH TESLA REP. PRIOR TO START OF ROUGH-IN. PROVIDE ALL CONDUIT, WIRING AND CONNECTIONS TO COMPLETE INSTALLATION. SEE PAINT BOOTH GENERAL NOTES AND PAINT BOOTH SHOP DRAWINGS FOR ADDITIONAL REQUIREMENTS/INFORMATION. (NOTE: (WHEN POSSIBLE) INSTALL ELECTRICAL DEVICES GREATER THAN 3' FROM ANY PAINT BOOTH/PREP BOOTH DOOR OR OPENING, TO AVOID CLASSIFIED HAZARDOUS AREAS. ALL ELECTRICAL DEVICES SHALL BE LISTED FOR THE CLASSIFIED HAZARDOUS AREA, IN WHICH THEY ARE INSTALLED. SEE KEY NOTE #1, FOR ADDITIONAL INFORMATION.)

9. JUNCTION BOX FOR POWER TO MIXING ROOM FANS, MOTORS AND CONTROLS. PROVIDE ALL CONDUIT, WIRING, AND CONNECTIONS TO COMPLETE INSTALLATION OF MIXING ROOM PER MANUFACTURERS SPECIFICATIONS AND ENSURE THAT THE UNIT IS FULLY OPERATIONAL. FIELD VERIFY CONNECTION POINTS. VERIFY AND COORDINATE ALL REQUIREMENTS WITH PAINT BOOTH VENDOR AND TESLA REPRESENTATIVE. (NOTE: RACEWAY, JUNCTION BOX AND WIRING FOR MIXING ROOM FAN SHALL BE INSTALLED OUTSIDE MIXING ROOM/HAZARDOUS AREA, MOUNTED ON EXTERIOR WALL OR ON TOP OF MIXING ROOM ROOF STRUCTURE. (WHEN POSSIBLE) INSTALL ELECTRICAL DEVICES GREATER THAN 3' FROM ANY PAINT BOOTH/PREP BOOTH DOOR OR OPENING, TO AVOID CLASSIFIED HAZARDOUS AREAS. ALL ELECTRICAL DEVICES SHALL BE LISTED FOR THE CLASSIFIED HAZARDOUS AREA, IN WHICH THEY ARE INSTALLED. SEE KEY NOTE #1, FOR ADDITIONAL INFORMATION.)

10. JUNCTION BOX FOR POWER TO MIXING ROOM LIGHT FIXTURES. PROVIDE ALL CONDUIT, WIRING, AND CONNECTIONS TO COMPLETE INSTALLATION PER MANUFACTURERS SPECIFICATIONS. FIELD VERIFY CONNECTION POINTS. VERIFY AND COORDINATE ALL REQUIREMENTS WITH PAINT BOOTH VENDOR AND TESLA REPRESENTATIVE. (NOTE: JUNCTION BOX FOR MIXING ROOM LIGHTING SHALL BE INSTALLED OUTSIDE MIXING ROOM, MOUNTED ON EXTERIOR WALL OR ON TOP OF MIXING ROOM ROOF STRUCTURE. (WHEN POSSIBLE) INSTALL ELECTRICAL DEVICES GREATER THAN 3' FROM ANY PAINT BOOTH/PREP BOOTH DOOR OR OPENING, TO AVOID CLASSIFIED HAZARDOUS AREAS. ALL ELECTRICAL DEVICES SHALL BE LISTED FOR THE CLASSIFIED HAZARDOUS AREA, IN WHICH THEY ARE INSTALLED. SEE KEY NOTE #1, FOR ADDITIONAL INFORMATION.)

11. NOT USED.

12. NOT USED.

13. NOT USED.

14. NOT USED.

THE RESPONSE GROUP, INC.
An Electrical Engineering Corporation
6705 Academy N.E. Suite B
Albuquerque, New Mexico 87109
Phone:(505) 323-7629 Fax:(505) 323-7594
E-mail: theresponsegroup@trg-inc.net

100% CDs

MODULUS
ARCHITECTS
AND LAND USE
PLANNING
8220 SAN PEDRO DR NE
SUITE 520
ALBUQUERQUE, NEW
MEXICO 87113
PHONE (505) 338-1499
FAX (505) 338-1498

COLORADO LICENSED
THOMAS F. RUEHLE
63540
PROFESSIONAL ENGINEER
2/13/2024
23303

PROJECT TITLE

TESLA COLLISION CENTER

6951
S.BLACKHAWK
STREET,
BUILDING 1,
CENTENIAL. CO
80112

PROJECT MANAGER

DRAWN BY:

ISSUE / REVISION

SHEET TITLE

ENLARGED POWER PLAN

SCALE:

JOB NO.

SHEET NUMBER

E3.01

COPYRIGHT 2021 MODULUS ARCHITECTS

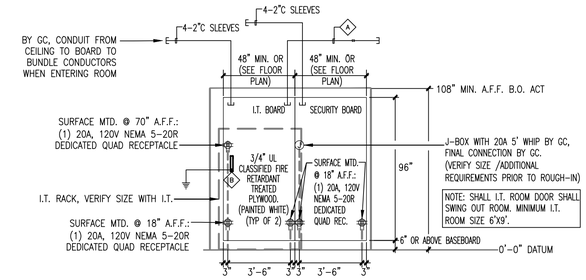

1 TELECOM AND SECURITY TERMINATION BOARDS
NTS

NOTES:
1. ALL METAL CONDUITS STUBS SHALL BE BONDED TO THE TELECOM BUS BAR USING #6 CU AND UL LISTED GROUND CLAMP. PROVIDE PULLSTRINGS AND PLASTIC BUSHING IN ALL CONDUIT STUBS.
2. COORDINATE WORK WITH TELECOM DRAWINGS.
3. EACH RECEPTACLE ON DEDICATED CIRCUIT

DETAIL KEYED NOTES:

A 2" SERVICE CONDUIT. SEE FLOOR PLAN FOR EXACT QUANTITY, SIZE AND ROUTING.

B GROUND BUS BAR. PROVIDE #6CU CONNECTION TO THE MAIN SERVICE GROUND BUS BAR.

GENERAL NOTES:
1. BOARDS CAN BE ON SEPARATE WALLS. SIDE BY SIDE IS PREFERRED.
2. RETAIL MALL LOCATIONS: (1) 4'X8' IS SUFFICIENT.
3. ALL OTHER PROJECT TYPES (TESLA CENTERS/COLLISION CENTERS): REQUIRE (2) 4'X8', (1) FOR I.T. AND (1) FOR SECURITY.
4. 50K TESLA CENTERS SSD/100K MEGA CENTERS: MDF MAIN DISTRIBUTION FRAME FOR ALL. IDF INDEPENDENT DISTRIBUTION FRAME ROOM NEEDED FOR RUNS EXCEEDING 300'.

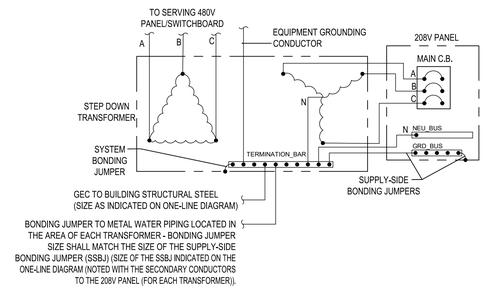

NOTES:
- REFER TO ONE-LINE DIAGRAM FOR PRIMARY AND SECONDARY CONDUCTOR SIZES (FOR EACH TRANSFORMER).
- PROVIDE GROUNDING ELECTRODE CONDUCTOR SIZED AS INDICATED ON ONE-LINE DIAGRAM (FOR EACH TRANSFORMER).
- CONTRACTOR TO PROVIDE AND INSTALL SYSTEM BONDING JUMPER, SUPPLY-SIDE BONDING JUMPERS TO ENCLOSURES, GROUNDING ELECTRODE CONDUCTOR, GROUNDING ELECTRODES IN COMPLIANCE WITH N.E.C SECTION 250.30.
- SYSTEM BONDING JUMPER/SUPPLY-SIDE BONDING JUMPER SHALL MATCH THE SIZE OF THE SSBJ INDICATED ON THE ONE-LINE DIAGRAM (NOTED WITH THE SECONDARY CONDUCTORS TO THE 208V PANEL (FOR EACH TRANSFORMER)).
- ALL GROUNDING CONDUCTORS SHALL BE COPPER.

2 TYPICAL INTERIOR STEP-DOWN XFMR GROUNDING DETAIL
NO SCALE

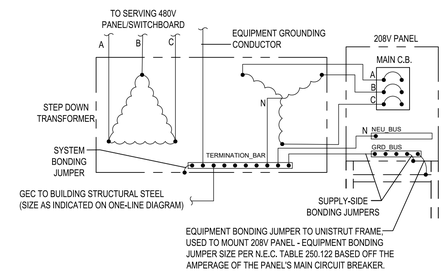

NOTES:
- REFER TO ONE-LINE DIAGRAM FOR PRIMARY AND SECONDARY CONDUCTOR SIZES (FOR EACH TRANSFORMER).
- PROVIDE GROUNDING ELECTRODE CONDUCTOR SIZED AS INDICATED ON ONE-LINE DIAGRAM (FOR EACH TRANSFORMER).
- CONTRACTOR TO PROVIDE AND INSTALL SYSTEM BONDING JUMPER, SUPPLY-SIDE BONDING JUMPERS TO ENCLOSURES, GROUNDING ELECTRODE CONDUCTOR, GROUNDING ELECTRODES IN COMPLIANCE WITH N.E.C SECTION 250.30.
- SYSTEM BONDING JUMPER/SUPPLY-SIDE BONDING JUMPER SHALL MATCH THE SIZE OF THE SSBJ INDICATED ON THE ONE-LINE DIAGRAM (NOTED WITH THE SECONDARY CONDUCTORS TO THE 208V PANEL (FOR EACH TRANSFORMER)).
- ALL GROUNDING CONDUCTORS SHALL BE COPPER.

3 TYPICAL EXTERIOR STEP-DOWN XFMR GROUNDING DETAIL
NO SCALE

MODULUS ARCHITECTS
AND LAND USE PLANNING
8220 SAN PEDRO DR NE
SUITE 520
ALBUQUERQUE, NEW MEXICO 87113
PHONE (505) 338-1499
FAX (505) 338-1498

COLORADO LICENSED
THOMAS F. RUEHLE
63540
PROFESSIONAL ENGINEER
2/15/2024
23303

PROJECT TITLE

TESLA COLLISION CENTER

6951
S.BLACKHAWK
STREET,
BUILDING 1,
CENTENIAL. CO
80112

PROJECT MANAGER

DRAWN BY:

ISSUE / REVISION

SHEET TITLE

POWER DETAILS

SCALE:

JOB NO.

SHEET NUMBER

E3.02

THE RESPONSE GROUP, INC.
An Electrical Engineering Corporation
6705 Academy N.E. Suite B
Albuquerque, New Mexico 87109
Phone:(505) 323-7629 Fax:(505) 323-7594
E-mail: theresponsegroup@trg-inc.net

100% CDs

COPYRIGHT 2021 MODULUS ARCHITECTS

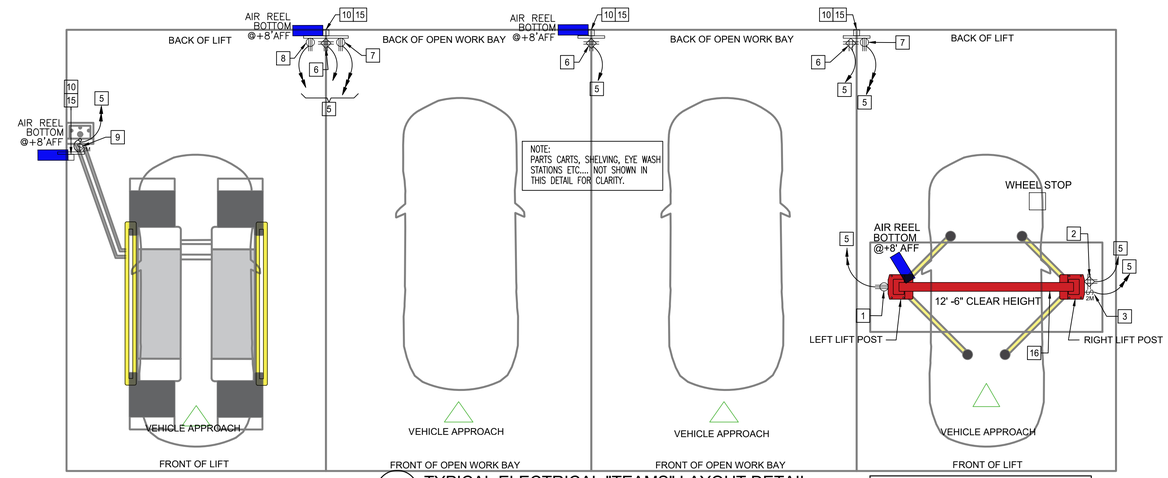

1 TYPICAL ELECTRICAL "TEAMS" LAYOUT DETAIL
N.T.S.

TYPICAL 2-POST LIFT ELECTRICAL LAYOUT

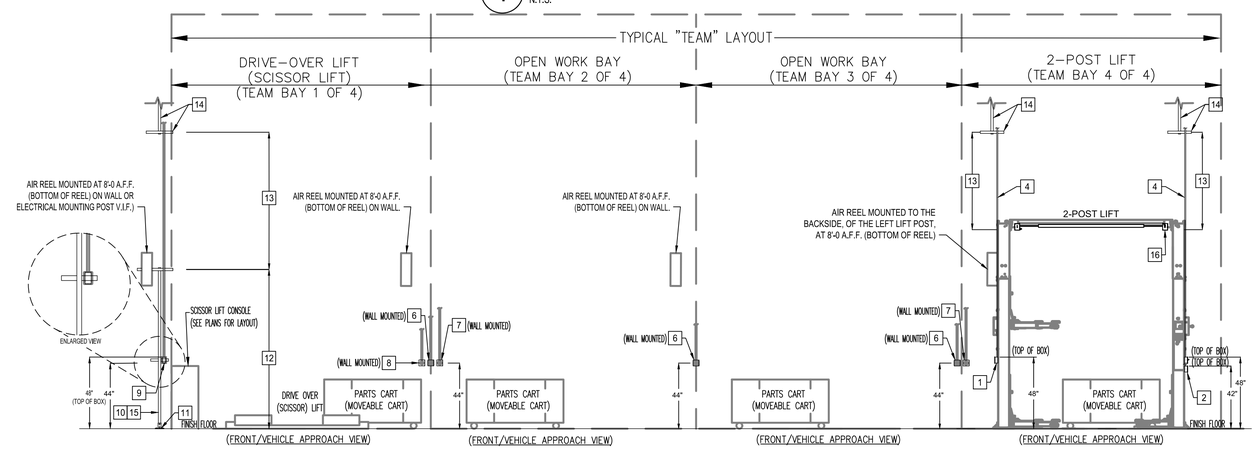

TYPICAL "TEAMS" LAYOUT WITH WALL/ELECTRICAL MOUNTING POST, MOUNTED DEVICES- ELEVATION

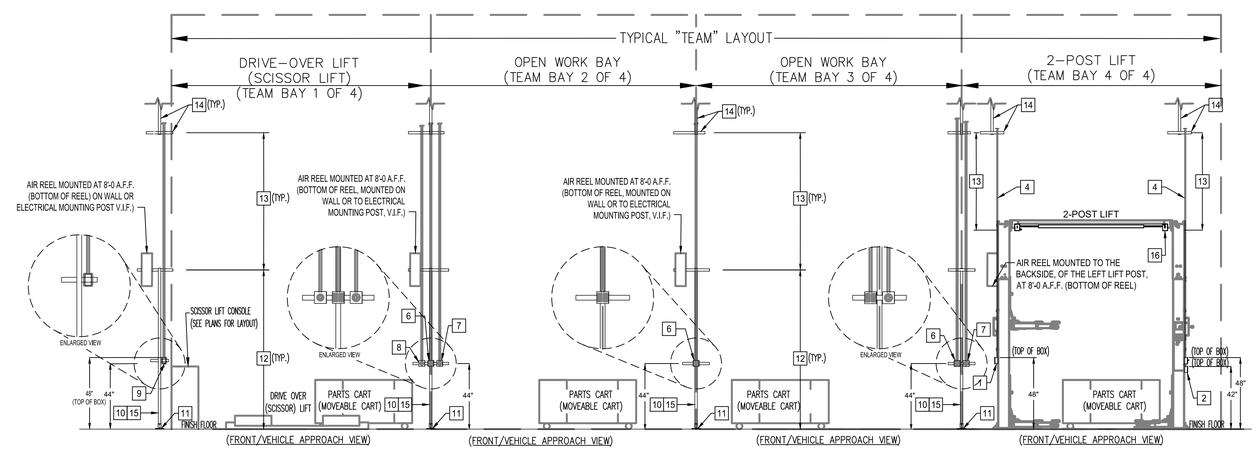

TYPICAL "TEAMS" LAYOUT WITH ELECTRICAL MOUNTING POST, MOUNTED DEVICES - ELEVATION

2 TYPICAL ELECTRICAL TEAMS ELEVATION DETAILS
NTS

100% CDs

THE RESPONSE GROUP, INC.
An Electrical Engineering Corporation
6705 Academy N.E. Suite B
Albuquerque, New Mexico 87109
Phone:(505) 323-7629 Fax:(505) 323-7594
E-mail: theresponsegroup@trg-inc.net

MODULUS ARCHITECTS
AND LAND USE PLANNING
8220 SAN PEDRO DR NE
SUITE 520
ALBUQUERQUE, NEW MEXICO 87113
PHONE (505) 338-1499
FAX (505) 338-1498

COLORADO LICENSED
THOMAS F. RUEGG
63540
PROFESSIONAL ENGINEER
2/13/2024
23303

PROJECT TITLE

TESLA COLLISION CENTER

6951 S.BLACKHAWK STREET, BUILDING 1, CENTENIAL. CO 80112

PROJECT MANAGER

DRAWN BY:

ISSUE / REVISION

SHEET TITLE

POWER DETAILS

SCALE:

JOB NO.

SHEET NUMBER

E3.03

COPYRIGHT 2021 MODULUS ARCHITECTS

GENERAL NOTES (SECURITY ACCESS DOOR ROUGH-IN DETAILS)

A. WHERE IDENTIFIED ON THESE DRAWINGS, MOUNTING HEIGHTS ARE REFERENCED FROM THE FINISHED FLOOR TO THE CENTERLINE OF THE DEVICE OR OUTLET.

B. ROUTE PATHWAYS PERPENDICULAR OR PARALLEL TO BUILDING LINES (NOT REQUIRED FOR CABLE HANGERS ABOVE ACCESSIBLE CEILINGS).

C. REFER TO ARCHITECTURAL HARDWARE GROUPS (SHEET A9.02) FOR DOOR HARDWARE REQUIREMENTS.

D. DASHED LINES INDICATE SUBSURFACE ELEMENTS.

E. REFER TO ARCHITECTURAL DRAWINGS FOR CEILING TYPES.

F. CARD READERS AND INTERCOMS LOCATED ON UNSECURE SIDE OF DOOR. JUNCTION BOX LOCATED ON SECURE SIDE OF DOOR (WHEN NOT RECESSED INSIDE OF WALLS).

G. REFERENCE FLOOR PLAN FOR CARD READER TYPES.

H. HALF-TONE LINES INDICATE FUTURE ELEMENTS.

GENERAL CONSUMABLES (SECURITY ACCESS DOOR ROUGH-IN DETAILS

1. 3/4" CHASE NIPPLES
2. 3/4" RIGID COUPLER
3. 3/4" SEAL TIGHT 90
4. BOX CONNECTOR
5. 1-1/4" POP-ON BUSHING

KEY NOTES (SECURITY ACCESS DOOR ROUGH-IN DETAILS)

1. NOT USED.
2. NOT USED.
3. 2' X 2' ACCESS HATCH (AT INACCESSIBLE CEILINGS)
4. CONNECT TO JUNCTION BOX.
5. DOOR FRAME MOUNTED 2-1/8" DEEP, JUNCTION BOX.
6. ELECTRIFIED PIVOT WITH PIGTALE (VERIFY WITH ARCHITECTURAL DOOR HARDWARE SPECIFICATIONS. OPTIONAL ELECTRIFIED HINGES MAY BE USED WITH TESLA SECURITY/PROJECT MANAGER APPROVAL).
7. 3/4" LIQUID-TIGHT FLEX.
8. 3/4" EMT CONDUIT.
9. NOT USED.
10. 4" SQUARE, 2-1/8"D BACKBOX WITH SINGLE GANG RING.
11. FACTORY-DRILLED BORE THROUGH DOOR FOR LOCK WIRE.
12. 4" SQUARE, 2-1/8"D BACKBOX WITH 5/8" RAISED 4" SQUARE, SINGLE GANG RING.
13. BACKOX TO ENCROACH ON DOOR FRAME BY (2) INCHES.
14. (2) 3/4" LIQUID-TIGHT FLEX PATHWAYS CONNECT THE 4-SQUARE BOX TO JUNCTION BOX.
15. EXTEND CONDUIT TO SPACE ABOVE ACCESSIBLE CEILING, ABOVE/NEAR DOORWAY.

NOTES:

- COORDINATE INSTALLATION/ROUGH-IN OF ALL ASSOCIATED SECURITY ACCESS DOOR DEVICES/JUNCTION BOXES/CONDUITS WITH TESLA'S LOW VOLTAGE AND SECURITY SYSTEM INSTALLERS IN FIELD, PRIOR TO START OF WORK.
- FIELD VERIFY WHICH SECURITY ACCESS ROUGH-IN DETAIL APPLIES TO EACH ACCESS DOOR.
- CONTRACTOR TO COORDINATE INSTALLATION OF ALL ELECTRICAL DEVICES TO BE INSTALLED AT EACH SECURITY ACCESS DOOR. PROVIDE ALL NECESSARY DEVICES/JUNCTION BOXES/CONDUITS FOR A FULLY OPERATIONAL SECURITY DOOR SYSTEM. SEE ELECTRICAL LOW VOLTAGE/DATA PLANS, E6.XX SERIES SHEETS FOR ADDITIONAL INFORMATION.
- VERIFY EXACT MOUNTING LOCATION OF SECURITY ACCESS (CTE) CONTROLLER AND LOW VOLTAGE TRANSFORMER/POWER SUPPLY CABINET (FOR SECURITY ACCESS (CTE) CONTROLLER) TYPICALLY MOUNTED IN I.T. ROOM. SEE ELECTRICAL ENLARGED LOW VOLTAGE/DATA PLAN, SHEET E6.00A FOR ADDITIONAL INFORMATION.
- REFER TO ARCHITECTURAL PLANS FOR DOOR HARDWARE SPECIFICATIONS.
- ALL LOW VOLTAGE WIRING SHALL BE PROVIDED AND INSTALL BY TESLA'S LOW VOLTAGE CONTRACTORS.
- CONNECTION TO ELECTRIFIED DOOR LOCK REQUIRES LOW VOLTAGE CONNECTION AT HANDLE IN DOOR. FACTORY DOOR BORING REQUIRED (UNLESS HOLLOW METAL DOOR) TO ROUTE LOW VOLTAGE WIRING FROM CONNECTION AT DOOR LOCK TO ELECTRIFIED DOOR HINGE OR PIVOT AND DOOR FRAME MOUNTED JUNCTION BOX. FIELD VERIFY EXACT MOUNTING LOCATIONS OF ELECTRIFIED DOOR HINGE OR PIVOT AND DOOR FRAME MOUNTED JUNCTION BOX.

PLAN VIEW

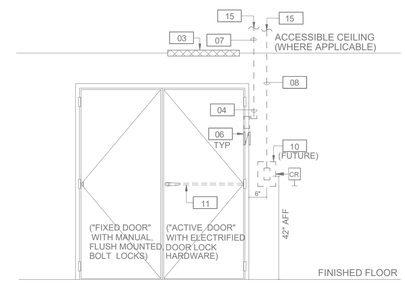

ELEVATION VIEW - SECURE SIDE

THEORY OF OPERATION:
- NORMAL DOOR STATE IS CLOSED.
- DOOR IS LOCKED ON THE UNSECURE SIDE AND UNLOCKED ON THE SECURE SIDE.
- TO OPEN DOOR FROM UNSECURE SIDE, AUTHORIZED CARD MUST BE PRESENTED TO UNLOCK DOOR.
- HARDWARE INTEGRATED REQUEST TO EXIT SWITCH SHUNTS DOOR CONTACT ALARM THUS ALLOWING VALID EXIT.
- LOCK IS POWERED CENTRALLY FROM SECURITY EQUIPMENT LOCATION.

DOUBLE DOOR - ELECTRIC LOCK W/ INTERNAL REX, LATCH MONITOR, CARD READER - RECESSED MOUNT INFRASTRUCTURE

SCALE: N.T.S.

PLAN VIEW

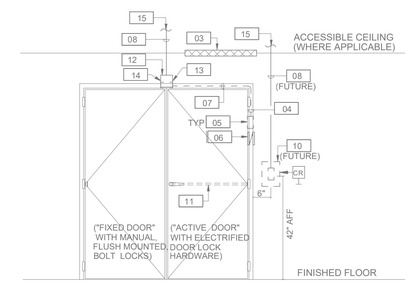

ELEVATION VIEW - SECURE SIDE

THEORY OF OPERATION:
- NORMAL DOOR STATE IS CLOSED.
- DOOR IS LOCKED ON THE UNSECURE SIDE AND UNLOCKED ON THE SECURE SIDE.
- TO OPEN DOOR FROM UNSECURE SIDE, AUTHORIZED CARD MUST BE PRESENTED TO UNLOCK DOOR.
- HARDWARE INTEGRATED REQUEST TO EXIT SWITCH SHUNTS DOOR CONTACT ALARM THUS ALLOWING VALID EXIT.
- LOCK IS POWERED CENTRALLY FROM SECURITY EQUIPMENT LOCATION.

DOUBLE DOOR - ELECTRIC LOCK W/ INTERNAL REX, LATCH MONITOR, CARD READER - SURFACE MOUNT INFRASTRUCTURE

SCALE: N.T.S.

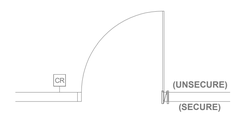

PLAN VIEW

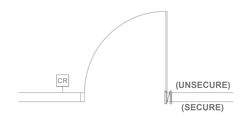

PLAN VIEW

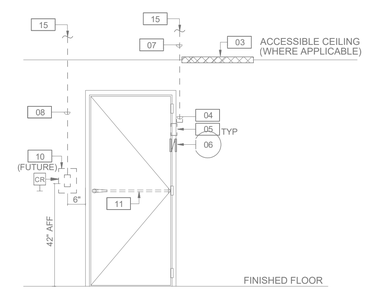

ELEVATION VIEW - SECURE SIDE

THEORY OF OPERATION:
- NORMAL DOOR STATE IS CLOSED.
- DOOR IS LOCKED ON THE UNSECURE SIDE AND UNLOCKED ON THE SECURE SIDE.
- TO OPEN DOOR FROM UNSECURE SIDE, AUTHORIZED CARD MUST BE PRESENTED TO UNLOCK DOOR.

- HARDWARE INTEGRATED REQUEST TO EXIT BYPASSES ALARM ON EXIT.
- LOCK IS POWERED CENTRALLY FROM SECURITY EQUIPMENT LOCATION.

SINGLE DOOR - ELECTRIC LOCK W/ INTERNAL REX, LATCH MONITOR, CARD READER - RECESSED MOUNT INFRASTRUCTURE

SCALE: N.T.S.

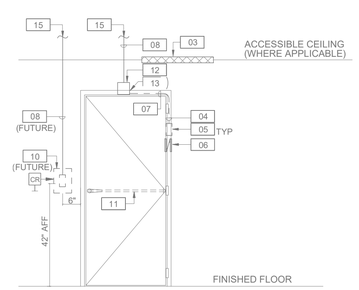

ELEVATION VIEW - SECURE SIDE

THEORY OF OPERATION:
- NORMAL DOOR STATE IS CLOSED.
- DOOR IS LOCKED ON THE UNSECURE SIDE AND UNLOCKED ON THE SECURE SIDE.
- TO OPEN DOOR FROM UNSECURE SIDE, AUTHORIZED CARD MUST BE PRESENTED TO UNLOCK DOOR.
- HARDWARE INTEGRATED REQUEST TO EXIT BYPASSES ALARM ON EXIT.
- LOCK IS POWERED CENTRALLY FROM SECURITY EQUIPMENT LOCATION.

SINGLE DOOR - ELECTRIC LOCK W/ INTERNAL REX, LATCH MONITOR CARD READER - SURFACE MOUNT INFRASTRUCTURE

SCALE: N.T.S.

MODULUS ARCHITECTS AND LAND USE PLANNING
8220 SAN PEDRO DR NE
SUITE 520
ALBUQUERQUE, NEW MEXICO 87113
PHONE (505) 338-1499
FAX (505) 338-1498

COLORADO LICENSED
THOMAS F. RUEHLE
63540
PROFESSIONAL ENGINEER
2/13/2024
23303

PROJECT TITLE
TESLA COLLISION CENTER

TESLA COLLISION CENTER

6951
S.BLACKHAWK
STREET,
BUILDING 1,
CENTENIAL. CO
80112

PROJECT MANAGER

DRAWN BY:

ISSUE / REVISION

SHEET TITLE

POWER DETAILS

SCALE:

JOB NO.

SHEET NUMBER

E3.04

THE RESPONSE GROUP, INC.
An Electrical Engineering Corporation
6705 Academy N.E. Suite B
Albuquerque, New Mexico 87109
Phone:(505) 323-7629 Fax:(505) 323-7594
E-mail: theresponsegroup@trg-inc.net

100% CDs

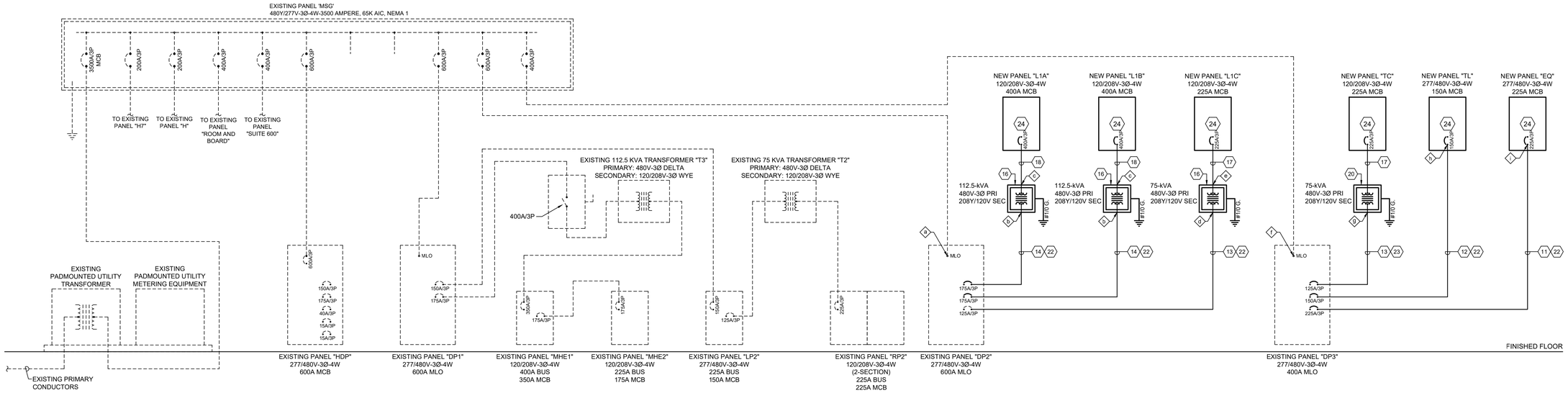

EXISTING POWER RISER DIAGRAM

SHORT CIRCUIT CALCULATIONS ◇

a. PER EXISTING DRAWINGS, AVAILABLE FAULT CURRENT AT EXISTING PANEL "DP2" IS APPROXIMATELY 14,275 AMPERES.

b. APPROXIMATELY 10' OF 2/0 Cu CONDUCTORS LIMIT SHORT CIRCUIT CURRENT TO APPROXIMATELY 13,510 AMPERES.

c. 112.5 KVA TRANSFORMER WITH AN ASSUMED IMPEDANCE OF 3.7% LIMITS SHORT CIRCUIT CURRENT TO APPROXIMATELY 2,881 AMPERES AT SECONDARY SIDE OF TRANSFORMER. THEREFORE DOWNSTREAM PANEL "L1A" AND "L1B" SHALL HAVE A MINIMUM RATING OF 10K AIC.

d. APPROXIMATELY 10' OF 1 Cu CONDUCTORS LIMIT SHORT CIRCUIT CURRENT TO APPROXIMATELY 13,151 AMPERES.

e. 75 KVA TRANSFORMER WITH AN ASSUMED IMPEDANCE OF 2.5% LIMITS SHORT CIRCUIT CURRENT TO APPROXIMATELY 2,834 AMPERES AT SECONDARY SIDE OF TRANSFORMER. THEREFORE DOWNSTREAM PANEL "L1C" SHALL HAVE A MINIMUM RATING OF 10K AIC.

f. PER EXISTING DRAWINGS, AVAILABLE FAULT CURRENT AT EXISTING PANEL "DP3" IS APPROXIMATELY 10,155 AMPERES.

g. APPROXIMATELY 260' OF 2/0 Cu CONDUCTORS LIMIT SHORT CIRCUIT CURRENT TO APPROXIMATELY 4,961 AMPERES AT PRIMARY SIDE OF TRANSFORMER. THEREFORE DOWNSTREAM PANEL "TP" SHALL HAVE A MINIMUM RATING OF 10K AIC.

h. APPROXIMATELY 20' OF 1/0 Cu CONDUCTORS LIMIT SHORT CIRCUIT CURRENT TO APPROXIMATELY 9,248. THEREFOR PANEL "TL" SHALL HAVE A MINIMUM RATING OF 22K AIC.

i. APPROXIMATELY 20' OF 4/0 Cu CONDUCTORS LIMIT SHORT CIRCUIT CURRENT TO APPROXIMATELY 9,629. THEREFOR PANEL "EQ" SHALL HAVE A MINIMUM RATING OF 22K AIC.

GRAPHIC KEY

- NEW CONDUIT or EQUIPMENT
- R — EXISTING CONDUIT or EQUIPMENT TO BE DEMOLISHED AS INDICATED
- EXISTING CONDUIT OR EQUIPMENT

GENERAL NOTES

A. THE ELECTRICAL CONTRACTOR SHALL PROVIDE AND INSTALL ALL ELECTRICAL FACILITIES IN ACCORDANCE WITH THE FOLLOWING SPECIFICATIONS, PLANS AND ASSOCIATED NOTES, NATIONAL ELECTRICAL CODE, STATE AND LOCAL CODES AND IN A NEAT AND WORKMANLIKE MANNER.

B. ALL UNFORESEEN CONDITIONS THAT MAY AFFECT SCOPE OF WORK / CODE VIOLATIONS, DISCOVERED DURING DEMOLITION / CONSTRUCTION, SHALL IMMEDIATELY BE BROUGHT TO THE ATTENTION OF THE ARCHITECT / OWNER / ENGINEER.

C. THE ELECTRICAL CONTRACTOR SHALL INCLUDE IN HIS BID THE COST OF ALL PERMITS, TESTS AND INSPECTIONS, AND VISIT THE SITE OF WORK PRIOR TO SUBMITTING BID.

D. THE ELECTRICAL CONTRACTOR SHALL GUARANTEE ALL WORK AND MATERIAL FOR A PERIOD OF ONE YEAR AFTER DATE OF ACCEPTANCE.

E. A SET OF MARKED UP PRINTS SHALL BE PREPARED SHOWING ALL CHANGES MADE DURING CONSTRUCTION AND TURNED OVER TO THE OWNER AT THE END OF THE CONSTRUCTION. ALL CHANGES MUST HAVE THE OWNER'S APPROVAL.

F. INTERRUPTION OF ANY ELECTRICAL SERVICES SHALL BE COORDINATED WITH THE OWNER AT LEAST 7 DAYS PRIOR TO THE INTENDED OUTAGE AND SHALL BE REQUESTED IN WRITING WITH A COPY TO THE ARCHITECT AND OWNER.

G. MAINTAIN THE SAME COLOR CODING FOR 120/208V-3Ø-4W CIRCUITS THROUGHOUT PROJECT (RED-BLUE-BLACK, GREEN, WHITE).

G. MAINTAIN THE SAME COLOR CODING FOR 277/480V-3Ø-4W CIRCUITS THROUGHOUT PROJECT (BROWN, ORANGE, YELLOW, GREEN/YELLOW, GREY).

H. ALL FIRE WALL PENETRATIONS SHALL BE SEALED IN ORDER TO MAINTAIN FIRE WALL RATING.

I. ELECTRICAL CONTRACTOR SHALL PROVIDE AND INSTALL LABELING AND FIELD MARKINGS ON ELECTRICAL EQUIPMENT PER NEC ARTICLE 110.16, 110.21, 110.24 and 408.4.

J. CONTRACTOR TO WORK WITH TESLA ELECTRICAL CONSULTANT, ASSIGNED BY TESLA PROJECT MANAGER, TO PROVIDE AN OVERCURRENT PROTECTIVE DEVICE COORDINATION STUDY. CONTRACTOR PROVIDE ALL NECESSARY INFORMATION REQUIRED FOR COMPLETION OF THE STUDY TO THE CONSULTANT PREPARING THE STUDY (INCLUDING ALL AS-BUILT INFORMATION).THE COORDINATION STUDY SHALL BE PROVIDED FOR ALL ADJUSTABLE CIRCUIT BREAKERS, WHETHER THEY ARE NEW OR EXISTING, SHOWING SETTINGS REQUIRED TO ASSURE THAT BREAKERS RESPOND TO ANY TRIP-INITIATING CONDITION IN THE LEAST DISRUPTIVE SEQUENCE. STUDY SHALL TAKE INTO CONSIDERATION CONDITIONS THAT MAY CAUSE TRIPPING DUE TO ANY SETTING OF THE ADJUSTABLE BREAKER(S) AND CONTRACTOR SHALL ADJUST BREAKER(S) AS SUGGESTED BY THE STUDY UNLESS INSTRUCTED OTHERWISE. STUDY SHALL BE SUBMITTED TO OWNER AND ARCHITECT / ENGINEER FOR REVIEW BEFORE ADJUSTMENTS ARE MADE TO THE INSTALLED BREAKER(S). ANY COST FOR COORDINATION STUDY SHALL BE PAID BY CONTRACTOR

KEYED NOTES ⬡

1. NOT USED.
2. NOT USED.
3. NOT USED.
4. NOT USED.
5. NOT USED.
6. NOT USED.
7. NOT USED.
8. NOT USED.
9. NOT USED.
10. NOT USED.
11. (4) 4/0 (CU), #4 (CU) GROUND IN 2-1/2"C. (VERIFY ROUTING IN FIELD).
12. (4) #1/0(CU), (1) #6G (CU), 2" C (VERIFY ROUTING IN FIELD).
13. (3) #1(CU), (1) #6 (CU), 1-1/2" C (VERIFY ROUTING IN FIELD).
14. (3) #2/0 (CU), (1) #6 (CU), 2" C (VERIFY ROUTING IN FIELD).
15. NOT USED.
16. NEW INTERIOR STEP-DOWN TRANSFORMER, SEE ELECTRICAL POWER PLAN, SHEET E3.00 FOR PROPOSED LOCATION. REFER TO "TYPICAL INTERIOR STEP-DOWN XFMR GROUNDING DETAIL ", DETAIL 2, SHEET E3.03 FOR ADDITIONAL INFORMATION/REQUIREMENTS. CONTRACTOR TO PROVIDE LABEL ON TRANSFORMER IDENTIFYING THE LOCATION OF THE PRIMARY DISCONNECT AS REQUIRED BY NEC ARTICLE 450.14.
17. (4) #4/0 (CU), #2(CU) GROUND, #2(CU) SSBJ IN 2-1/2"C. (CONDUCTORS SHALL BE ROUTED TO NOT EXCEED 10 L.F. TERMINATION TO TERMINATION.)
18. (4) 600 KCMIL (CU), #1/0 (CU) GROUND, #1/0 (CU) SSBJ IN 3-1/2"C. (CONDUCTORS SHALL BE ROUTED TO NOT EXCEED 10 L.F. TERMINATION TO TERMINATION.)
19. NOT USED.
20. NEW EXTERIOR (NEMA-3R RATED) STEP-DOWN TRANSFORMER, SEE SHEET ELECTRICAL SITE PLAN, SHEET E1.00 FOR PROPOSED LOCATION. REFER TO "TYPICAL EXTERIOR STEP-DOWN XFMR GROUNDING DETAIL ", DETAIL 3, SHEET E3.03, FOR ADDITIONAL INFORMATION/REQUIREMENTS. CONTRACTOR TO PROVIDE LABEL ON TRANSFORMER IDENTIFYING THE LOCATION OF THE PRIMARY DISCONNECT AS REQUIRED BY NEC ARTICLE 450.14.
21. NOT USED.
22. ROUTE CONDUIT/CONDUCTORS FROM SERVING EQUIPMENT, UP TO JOIST SPACE, OR HIGH UP ALONG THE EXTERIOR WALL (INSIDE THE BUILDING) TO TRANSFORMER/PANEL/EQUIPMENT(VERIFY ROUTING IN FIELD).
23. ROUTE CONDUIT/CONDUCTORS FROM SERVING EQUIPMENT, UP TO JOIST SPACE OR HIGH UP ALONG THE EXTERIOR WALL (INSIDE THE BUILDING), PRIOR TO STUBBING OUT OF THE BUILDING AT/NEAR EXTERIOR TRANSFORMER (VERIFY ROUTING IN FIELD).
24. SEE PANEL SCHEDULES, E4.0X SERIES SHEETS FOR ADDITIONAL INFORMATION/ REQUIREMENTS.

MODULUS ARCHITECTS
AND LAND USE PLANNING
8220 SAN PEDRO DR NE
SUITE 520
ALBUQUERQUE, NEW MEXICO 87113
PHONE (505) 338-1499
FAX (505) 338-1498

COLORADO LICENSED
THOMAS F. RUEHLE
63540
PROFESSIONAL ENGINEER
2/13/2024
23303

PROJECT TITLE

TESLA COLLISION CENTER

6951
S.BLACKHAWK
STREET,
BUILDING 1,
CENTENIAL. CO
80112

PROJECT MANAGER

DRAWN BY:

ISSUE / REVISION

SHEET TITLE

POWER RISER DIAGRAM

SCALE:

JOB NO.

SHEET NUMBER

E4.00

THE RESPONSE GROUP, INC.
An Electrical Engineering Corporation
6705 Academy N.E. Suite B
Albuquerque, New Mexico 87109
Phone:(505) 323-7629 Fax:(505) 323-7594
E-mail: theresponsegroup@trg-inc.net

100% CDs

COPYRIGHT 2021 MODULUS ARCHITECTS

COPYRIGHT 2021 MODULUS ARCHITECTS

PANEL SCHEDULE - NEW PANEL "L1B"

LOCATION: **Building Interior** *VOLTAGE:* **208Y/120V-3Ph, 4Wire** *AMPACITY:* **400A** *Main:* **400A MCB**
FED FROM: **MDP** *ENCLOSURE:* **NEMA 1** *MOUNTING:* **Surface** *AIC:* **22,000**

BKR SIZE	DESCRIPTION	WIRING	DEMAND CODE	LOAD (VA)	Ckt #	LOAD (VA) PHASE A	PHASE B	PHASE C	Ckt #	LOAD (VA)	DEMAND CODE	WIRING	DESCRIPTION	BKR SIZE
60A-3P	WELDER	3#4,1#10G, 1 1/4"C	WELD	4800	1	9600			2	4800	WELD	3#4,1#10G, 1 1/4"C	WELDER	60A-3P
			WELD	4800	3		9600		4	4800	WELD			
			WELD	4800	5			9600	6	4800	WELD			
20A-1P	SHOP MONITOR	2#12, 1#12G,3/4"C	REC	180	7	180			8				SPACE ONLY	1P
20A-1P	AIR DRYER	2#12, 1#12G,3/4"C	REC	180	9		180		10				SPACE ONLY	1P
20A-1P	AIR DRYER	2#12, 1#12G,3/4"C	REC	180	11			180	12				SPACE ONLY	1P
50A-2P	NEMA 14-50R	3#6,1#10G, 1"C	EQP	4160	13	8320			14	4160	EQP	3#6,1#10G, 1"C	NEMA 14-50R	50A-2P
			EQP	4160	15		8320		16	4160	EQP			
50A-2P	NEMA 14-50R	3#6,1#10G, 1"C	EQP	4160	17			8320	18	4160	EQP	3#6,1#10G, 1"C	NEMA 14-50R	50A-2P
			EQP	4160	19	8320			20	4160	EQP			
20A-2P	2 POST LIFT	2#12,1#12G, 3/4"C	EQP	1440	21		2880		22	1440	EQP	2#12,1#12G, 3/4"C	2 POST LIFT	20A-2P
			EQP	1440	23			2880	24	1440	EQP			
30A-2P	SCISSOR LIFT	2#10,1#10G, 3/4"C	EQP	1768	25	3536			26	1768	EQP	2#10,1#10G, 3/4"C	SCISSOR LIFT	30A-2P
			EQP	1768	27		3536		28	1768	EQP			
20A-1P	RECEPTACLES	2#12,1#12G, 3/4"C	REC	720	29			1080	30	360	REC	2#12,1#12G, 3/4"C	RECEPTACLES	20A-1P
20A-1P	RECEPTACLES	2#12,1#12G, 3/4"C	REC	720	31	1080			32	360	REC	2#12,1#12G, 3/4"C	RECEPTACLES	20A-1P
20A-1P	RECEPTACLES	2#12,1#12G, 3/4"C	REC	720	33		1440		34	720	REC	2#12,1#12G, 3/4"C	RECEPTACLES	20A-1P
20A-1P	RECEPTACLES	2#12,1#12G, 3/4"C	REC	720	35			1440	36	720	REC	2#12,1#12G, 3/4"C	RECEPTACLES	20A-1P
60A-3P	WELDER	3#4,1#10G, 1 1/4"C	WELD	4800	37	5520			38	720	REC	2#12,1#12G, 3/4"C	RECEPTACLES	20A-1P
			WELD	4800	39		5520		40	720	REC	2#12,1#12G, 3/4"C	RECEPTACLES	20A-1P
			WELD	4800	41			5160	42	360	REC	2#12,1#12G, 3/4"C	RECEPTACLES	20A-1P
1P	SPACE ONLY				43				44				SPACE ONLY	1P
1P	SPACE ONLY				45				46				SPACE ONLY	1P
1P	SPACE ONLY				47				48				SPACE ONLY	1P
1P	SPACE ONLY				49				50				SPACE ONLY	1P
1P	SPACE ONLY				51				52				SPACE ONLY	1P
1P	SPACE ONLY				53				54				SPACE ONLY	1P
1P	SPACE ONLY				55				56				SPACE ONLY	1P
1P	SPACE ONLY				57				58				SPACE ONLY	1P
1P	SPACE ONLY				59				60				SPACE ONLY	1P
1P	SPACE ONLY				61				62				SPACE ONLY	1P
1P	SPACE ONLY				63				64				SPACE ONLY	1P
1P	SPACE ONLY				65				66				SPACE ONLY	1P
1P	SPACE ONLY				67				68				SPACE ONLY	1P
1P	SPACE ONLY				69				70				SPACE ONLY	1P
1P	SPACE ONLY				71				72				SPACE ONLY	1P
1P	SPACE ONLY				73				74				SPACE ONLY	1P
1P	SPACE ONLY				75				76				SPACE ONLY	1P
1P	SPACE ONLY				77				78				SPACE ONLY	1P
1P	SPACE ONLY				79				80				SPACE ONLY	1P
1P	SPACE ONLY				81				82				SPACE ONLY	1P
1P	SPACE ONLY				83				84				SPACE ONLY	1P

Total Phase Loads (VA):	36,556	31,476	28,660
Total Phase Loads (Amps):	304.6	262.3	238.8
Total Connected Loads (kVA):	96.7		

Notes:
1. **New Panelboard**
2. **84-Circuit (2-Section)**
3. **Copper Neutral and Ground Bus Bars**
4. **Door-in-Door Enclosures.**

LOAD CALCULATIONS - NEW PANEL "L1B"

	Connected (kVA) by Type:		Estimated Demand (kVA) by Type:			
LTG	Lighting:		Lighting at 125% (kVA):		Total Estimated Demand (kVA):	94.6
REC	Receptacles:	7.4	Receptacles:	7.4	Amps at 208Y/120V-3 Phase (Amps):	262.8
			10kVA at 100% (kVA):	7.4	Panel Ampacity (Rating):	400
			Rest at 50% (kVA):	0.0		
EQP	Equipment:	46.1	Eqp at 100% (kVA):	46.1	Spare Capacity:	34.3%
LMECH	Largest Mech:		Largest at 125% (kVA):			
MECH	Mechanical:		Rest at 100% (kVA):			
WELD	Welders:	43.2	Per NEC 630.2B	41.1		

PANEL SCHEDULE - NEW PANEL "L1A"

LOCATION: **Building Interior** *VOLTAGE:* **208Y/120V-3Ph, 4Wire** *AMPACITY:* **400A** *Main:* **400A MCB**
FED FROM: **MDP** *ENCLOSURE:* **NEMA 1** *MOUNTING:* **Surface** *AIC:* **22,000**

BKR SIZE	DESCRIPTION	WIRING	DEMAND CODE	LOAD (VA)	Ckt #	LOAD (VA) PHASE A	PHASE B	PHASE C	Ckt #	LOAD (VA)	DEMAND CODE	WIRING	DESCRIPTION	BKR SIZE
60A-3P	WELDER	3#4,1#10G, 1 1/4"C	WELD	4800	1	9600			2	4800	WELD	3#4,1#10G, 1 1/4"C	WELDER	60A-3P
			WELD	4800	3		9600		4	4800	WELD			
			WELD	4800	5			9600	6	4800	WELD			
50A-2P	NEMA 14-50R	3#6,1#10G, 1"C	EQP	4160	7	5928			8	1768	EQP	2#10,1#10G, 3/4"C	SCISSOR LIFT	30A-2P
			EQP	4160	9		5928		10	1768	EQP			
1P	SPACE ONLY				11			360	12	360	REC	2#12,1#12G,3/4"C	RECEPTACLE	20A-1P
50A-2P	NEMA 14-50R	3#6,1#10G, 1"C	EQP	4160	13	8320			14	4160	EQP	3#6,1#10G, 1"C	NEMA 14-50R	50A-2P
			EQP	4160	15		8320		16	4160	EQP			
50A-2P	NEMA 14-50R	3#6,1#10G, 1"C	EQP	4160	17			8320	18	4160	EQP	3#6,1#10G, 1"C	NEMA 14-50R	50A-2P
			EQP	4160	19	8320			20	4160	EQP			
20A-2P	2 POST LIFT	2#12,1#12G, 3/4"C	EQP	1440	21		2880		22	1440	EQP	2#12,1#12G, 3/4"C	2 POST LIFT	20A-2P
			EQP	1440	23			2880	24	1440	EQP			
30A-2P	SCISSOR LIFT	2#10,1#10G, 3/4"C	EQP	1768	25	3536			26	1768	EQP	2#10,1#10G, 3/4"C	SCISSOR LIFT	30A-2P
			EQP	1768	27		3536		28	1768	EQP			
20A-1P	RECEPTACLES	2#12,1#12G, 3/4"C	REC	720	29			3424	30	2704	EQP	2#10,1#10G, 3/4"C	ALIGNMENT RACK	30A-2P
20A-1P	RECEPTACLES	2#12,1#12G, 3/4"C	REC	720	31	3424			32	2704	EQP			
20A-1P	RECEPTACLES	2#12,1#12G, 3/4"C	REC	720	33		1760		34	1040	EQP	2#12,1#12G,3/4"C	WHEEL BALANCER	20A-2P
20A-1P	RECEPTACLES	2#12,1#12G, 3/4"C	REC	720	35			1760	36	1040	EQP			
20A-1P	RECEPTACLES	2#12,1#12G, 3/4"C	REC	360	37	1920			38	1560	EQP	2#12,1#12G,3/4"C	TIRE CHANGER	20A-2P
20A-1P	RECEPTACLES	2#12,1#12G, 3/4"C	REC	360	39		1920		40	1560	EQP			
20A-1P	RECEPTACLES	2#12,1#12G, 3/4"C	REC	360	41			1080	42	720	REC	2#12,1#12G,3/4"C	REC	20A-1P
30A-1P	PAINT BOOTH	2#10, 1#10G, 3/4"C	EQP	2000	43	2720			44	720	EQP	2#12, 1#12G, 3/4"C	CO MONITORS	20A-1P
30A-1P	PAINT BOOTH	2#10, 1#10G, 3/4"C	EQP	2000	45		2600		46	600	EQP	2#12, 1#12G, 3/4"C	DRYER REC	20A-1P
30A-1P	PREP BOOTH	2#10, 1#10G, 3/4"C	EQP	2000	47			2360	48	360	REC	2#12, 1#12G, 3/4"C	MIXINGROOM REC	20A-1P
20A-1P	MIXING ROOM	2#12, 1#12G, 3/4"C	EQP	600	49	1992			50	1392	LMECH	2#12, 1#12G, 3/4"C	FANS	20A-1P
20A-2P	2 POST LIFT	2#12,1#12G,3/4"C	EQP	1440	51		1640		52	200	EQP	2#12, 1#12G, 3/4"C	SHAKER	20A-1P
			EQP	1440	53			1890	54	450	EQP	2#12, 1#12G, 3/4"C	PAINT MIX BANK	20A-1P
50A-2P	NEMA 14-50R	3#6,1#10G, 1"C	EQP	4160	55	4520			56	360	EQP	2#12, 1#12G, 3/4"C	AXALTA COMPUT	20A-1P
			EQP	4160	57		4160		58				SPACE ONLY	1P
1P	SPACE ONLY				59				60				SPACE ONLY	1P
1P	SPACE ONLY				61				62				SPACE ONLY	1P
1P	SPACE ONLY				63				64				SPACE ONLY	1P
1P	SPACE ONLY				65				66				SPACE ONLY	1P
1P	SPACE ONLY				67				68				SPACE ONLY	1P
1P	SPACE ONLY				69				70				SPACE ONLY	1P
1P	SPACE ONLY				71				72				SPACE ONLY	1P
1P	SPACE ONLY				73				74				SPACE ONLY	1P
1P	SPACE ONLY				75				76				SPACE ONLY	1P
1P	SPACE ONLY				77				78				SPACE ONLY	1P
1P	SPACE ONLY				79				80				SPACE ONLY	1P
1P	SPACE ONLY				81				82				SPACE ONLY	1P
1P	SPACE ONLY				83				84				SPACE ONLY	1P

Total Phase Loads (VA):	50,280	42,344	31,674
Total Phase Loads (Amps):	419.0	352.9	264.0
Total Connected Loads (kVA):	124.3		

Notes:
1. **New Panelboard**
2. **84-Circuit (2-Section)**
3. **Copper Neutral and Ground Bus Bars**
4. **Door-in-Door Enclosures.**

LOAD CALCULATIONS - NEW PANEL "L1A"

	Connected (kVA) by Type:		Estimated Demand (kVA) by Type:			
LTG	Lighting:		Lighting at 125% (kVA):		Total Estimated Demand (kVA):	124.6
REC	Receptacles:	5.4	Receptacles:	5.4	Amps at 208Y/120V-3 Phase (Amps):	346.2
			10kVA at 100% (kVA):	5.4	Panel Ampacity (Rating):	400
			Rest at 50% (kVA):	0.0		
EQP	Equipment:	88.7	Eqp at 100% (kVA):	88.7	Spare Capacity:	13.4%
LMECH	Largest Mech:	1.4	Largest at 125% (kVA):	1.7		
MECH	Mechanical:		Rest at 100% (kVA):			
WELD	Welders:	28.8	Per NEC 630.2B	28.8		

KEYED NOTES

A. CIRCUIT BREAKER INDICATED SHALL BE GFCI TYPE AND LISTED FOR USE IN PANELBOARD.

PANEL SCHEDULE - NEW PANEL "DP2"

LOCATION: **Building Interior** *VOLTAGE:* **480Y/277V-3Ph, 4Wire** *AMPACITY:* **600A** *Main:* **600A MCB**
FED FROM: **MDP** *ENCLOSURE:* **NEMA 1** *MOUNTING:* **Surface** *AIC:* **42,000**

BKR SIZE	DESCRIPTION	WIRING	DEMAND CODE	LOAD (VA)	Ckt #	LOAD (VA) PHASE A	PHASE B	PHASE C	Ckt #	LOAD (VA)	DEMAND CODE	WIRING	DESCRIPTION	BKR SIZE
15A-3P	EMON METER		EQP	50	1	7214			2	7,164	SUB		PANEL "L1C" THOUGH 75 KVA	125A-3P
			EQP	50	3		6314		4	6,264	SUB			
			EQP	50	5			5774	6	5,724	SUB			
175A-3P	PANEL "L1A" THROUGH 112.5KVA		SUB	40,192	7	40192			8				SPARE	125A-3P
			SUB	30,816	9		30816		10					
			SUB	29,874	11			29874	12					
175A-3P	PANEL "L1B" THROUGH 112.5KVA		SUB	41,176	13	41176			14				SPARE	60A-3P
			SUB	36,096	15		36096		16					
			SUB	33,280	17			33280	18					
1P	SPACE ONLY				19				20				SPARE	60A-3P
1P	SPACE ONLY				21				22					
1P	SPACE ONLY				23				24					
1P	SPACE ONLY				25				26				SPARE	45A-3P
1P	SPACE ONLY				27				28					
1P	SPACE ONLY				29				30					
1P	SPACE ONLY				31				32				SPARE	45A-3P
1P	SPACE ONLY				33				34					
1P	SPACE ONLY				35				36					
1P	SPACE ONLY				37	4000			38	4000	EQP		WATER HEATER	20A-3P
1P	SPACE ONLY				39		4000		40	4000	EQP	4#12, 1#12G, 3/4"C		
1P	SPACE ONLY				41			4000	42	4000	EQP			

Total Phase Loads (VA):	92,582	77,226	72,928
Total Phase Loads (Amps):	334.2	278.8	263.3
Total Connected Loads (kVA):	242.7		

Notes:
1. **New Panelboard**
2. **42-Circuit**
3. **Copper Neutral and Ground Bus Bars**
4. **Door-in-Door Enclosures.**

LOAD CALCULATIONS - NEW PANEL "DP2"

	Connected (kVA) by Type:		SUBFEED PANELS		Estimated Demand (kVA) by Type:			
LTG	Lighting:		Lighting:		Lighting at 125% (kVA):		Total Estimated Demand (kVA):	253.7
REC	Receptacles:		Receptacles:	21.2	Receptacles:	21.2	Amps at 480Y/277V-3 Phase (Amps):	305.3
					10kVA at 100% (kVA):	10.0	Panel Ampacity (Rating):	600
					Rest at 50% (kVA):	5.6		
EQP	Equipment:	12.2	Equipment:	111.9	Eqp at 100% (kVA):	124.1	Spare Capacity:	49.1%
LMECH	Largest Mech:		Largest Mech:	2.0	Largest at 125% (kVA):			
MECH	Mechanical:		Mechanical:	9.0	Rest at 100% (kVA):	11.0		
WELD	Welders:	144.0	Welders:	144.0	Per NEC 630.2B	103.0		

PANEL SCHEDULE - NEW PANEL "L1C"

LOCATION: **Building Interior** *VOLTAGE:* **208Y/120V-3Ph, 4Wire** *AMPACITY:* **225A** *Main:* **225A MCB**
FED FROM: **MDP** *ENCLOSURE:* **NEMA 1** *MOUNTING:* **Surface** *AIC:* **65,000**

BKR SIZE	DESCRIPTION	WIRING	DEMAND CODE	LOAD (VA)	Ckt #	LOAD (VA) PHASE A	PHASE B	PHASE C	Ckt #	LOAD (VA)	DEMAND CODE	WIRING	DESCRIPTION	BKR SIZE
20A-1P	RECEPTACLES	2#12,1#12G, 3/4"C	REC	720	1	1440			2	720	REC	2#12,1#12G, 3/4"C	RECEPTACLES	20A-1P
20A-1P	RECEPTACLES	2#12,1#12G, 3/4"C	REC	720	3		1440		4	720	REC	2#12,1#12G, 3/4"C	RECEPTACLES	20A-1P
20A-1P	RECEPTACLES	2#12,1#12G, 3/4"C	REC	720	5			1440	6	720	REC	2#12,1#12G, 3/4"C	RECEPTACLES	20A-1P
20A-1P	RECEPTACLES	2#12,1#12G, 3/4"C	REC	720	7	1440			8	720	REC	2#12,1#12G, 3/4"C	RECEPTACLES	20A-1P
20A-1P	RECEPTACLES	2#12,1#12G, 3/4"C	REC	720	9		1440		10	720	REC	2#12,1#12G, 3/4"C	RECEPTACLES	20A-1P
20A-1P	RECEPTACLES	2#12,1#12G, 3/4"C	REC	360	11			1080	12	720	REC	2#12,1#12G, 3/4"C	RECEPTACLES	20A-1P
20A-1P	RECEPTACLES	2#12,1#12G, 3/4"C	REC	360	13	1080			14	720	REC	2#12,1#12G, 3/4"C	RECEPTACLES	20A-1P
20A-1P	RECEIVING BELL	2#12,1#12G, 3/4"C	EQP	180	15		180		16				SPARE	1P
20A-1P	OVERHEAD DOOR	2#12,1#12G, 3/4"C	LMECH	2004	17			2004	18				SPARE	1P
20A-1P	OVERHEAD DOOR	2#12,1#12G, 3/4"C	MECH	2004	19	2004			20				SPARE	1P
20A-1P	OVERHEAD DOOR	2#12,1#12G, 3/4"C	MECH	2004	21		2004		22				SPARE	1P
20A-1P	CEILING FAN	2#12,1#12G, 3/4"C	MECH	1200	23			1200	24				SPARE	1P
20A-1P	CEILING FAN	2#12,1#12G, 3/4"C	MECH	1200	25	1200			26				SPARE	1P
20A-1P	CEILING FAN	2#12,1#12G, 3/4"C	MECH	1200	27		1200		28				SPARE	1P
1P	SPACE ONLY				29				30				SPARE	1P
1P	SPACE ONLY				31				32				SPARE	1P
1P	SPACE ONLY				33				34				SPARE	1P
1P	SPACE ONLY				35				36				SPARE	1P
1P	SPACE ONLY				37				38				SPARE	1P
1P	SPACE ONLY				39				40				SPARE	1P
1P	SPACE ONLY				41				42				SPARE	1P

Total Phase Loads (VA):	7,164	6,264	5,724
Total Phase Loads (Amps):	59.7	52.2	47.7
Total Connected Loads (kVA):	19.2		

Notes:
1. **New Panelboard**
2. **42-Circuit**
3. **Copper Neutral and Ground Bus Bars**
4. **Door-in-Door Enclosures.**

LOAD CALCULATIONS - NEW PANEL "L1C"

	Connected (kVA) by Type:		Estimated Demand (kVA) by Type:			
LTG	Lighting:		Lighting at 125% (kVA):		Total Estimated Demand (kVA):	19.7
REC	Receptacles:	9.4	Receptacles:	9.4	Amps at 208Y/120V-3 Phase (Amps):	54.6
			10kVA at 100% (kVA):	9.4	Panel Ampacity (Rating):	225
			Rest at 50% (kVA):	0.0		
EQP	Equipment:	0.2	Eqp at 100% (kVA):	0.2	Spare Capacity:	75.7%
LMECH	Largest Mech:	2.0	Largest at 125% (kVA):	2.5		
MECH	Mechanical:	7.6	Rest at 100% (kVA):	7.6		
WELD	Welders:		Per NEC 630.2B			

100% CDs

THE RESPONSE GROUP, INC.
An Electrical Engineering Corporation
6705 Academy N.E. Suite B
Albuquerque, New Mexico 87109
Phone:(505) 323-7629 Fax:(505) 323-7594
E-mail: theresponsegroup@trg-inc.net

MODULUS ARCHITECTS AND LAND USE PLANNING
8220 SAN PEDRO DR NE
SUITE 520
ALBUQUERQUE, NEW MEXICO 87113
PHONE (505) 338-1499
FAX (505) 338-1498

COLORADO LICENSED THOMAS F. RUEGG 63540 PROFESSIONAL ENGINEER 2/13/2024
23303

PROJECT TITLE

TESLA COLLISION CENTER

6951 S.BLACKHAWK STREET, BUILDING 1, CENTENIAL, CO 80112

PROJECT MANAGER

DRAWN BY:

ISSUE / REVISION

1 11-29-23 CITY COMMENTS

SHEET TITLE

PANEL SCHEDULES

SCALE:

JOB NO.

SHEET NUMBER

E4.01

COPYRIGHT 2021 MODULUS ARCHITECTS

PANEL SCHEDULE - NEW PANEL "TL"

LOCATION: **Building Interior** *VOLTAGE:* **480Y/277V-3Ph, 4Wire** *AMPACITY:* **150A** *Main:* **150A MCB**
FED FROM: **MDP** *ENCLOSURE:* **NEMA 1** *MOUNTING:* **Surface** *AIC:* **42,000**

BKR SIZE	DESCRIPTION	WIRING	DEMAND CODE	LOAD (VA)	Ckt #	LOAD (VA) PHASE A	PHASE B	PHASE C	Ckt #	LOAD (VA)	DEMAND CODE	WIRING	DESCRIPTION	BKR SIZE
20A-1P	LIGHTING	2#12,1#12G,3/4"C	LTG	2625	1	5125			2	2500	LTG	2#12,1#12G,3/4"C	LIGHTING	20A-1P
20A-1P	LIGHTING	2#12,1#12G,3/4"C	LTG	1875	3		3375		4	1500	LTG	2#12,1#12G,3/4"C	LIGHTING	20A-1P
20A-1P	LIGHTING	2#12,1#12G,3/4"C	LTG	1945	5			3570	6	1625	LTG	2#12,1#12G,3/4"C	LIGHTING	20A-1P
20A-1P	LIGHTING	2#12,1#12G,3/4"C	LTG	2125	7	3875			8	1750	LTG	2#12,1#12G,3/4"C	LIGHTING	20A-1P
20A-1P	LIGHTING	2#12,1#12G,3/4"C	LTG	1375	9		2575		10	1200	LTG	2#12,1#12G,3/4"C	FAÇA DE SIGNS	20A-1P
20A-1P	EXTERIOR LTG	2#12,1#12G,3/4"C	LTG	144	11			1144	12	1000	LTG	2#10, 1#10G, 1"C	MONUMENT SIGN	20A-1P
20A-1P	FAÇA DE SIGNS	2#12,1#12G,3/4"C	LTG	1200	13	1200			14				SPACE ONLY	1P
20A-1P	MIXING ROOM	2#12, 1#12G, 3/4"C	LTG	640	15		640		16				SPACE ONLY	1P
1P	SPACE ONLY				17				18				SPACE ONLY	1P
1P	SPACE ONLY				19				20				SPACE ONLY	1P
1P	SPACE ONLY				21				22				SPACE ONLY	1P
1P	SPACE ONLY				23				24				SPACE ONLY	1P
1P	SPACE ONLY				25				26				SPACE ONLY	1P
1P	SPACE ONLY				27				28				SPACE ONLY	1P
1P	SPACE ONLY				29				30				SPACE ONLY	1P
1P	SPACE ONLY				31				32				SPACE ONLY	1P
1P	SPACE ONLY				33				34				SPACE ONLY	1P
1P	SPACE ONLY				35				36				SPACE ONLY	1P
1P	SPACE ONLY				37				38				SPACE ONLY	1P
1P	SPACE ONLY				39				40				SPACE ONLY	1P
1P	SPACE ONLY				41				42				SPACE ONLY	1P

	PHASE A	PHASE B	PHASE C
Total Phase Loads (VA):	10,200	6,590	4,714
Total Phase Loads (Amps):	36.8	23.8	17.0
Total Connected Loads (kVA):	21.5		

Notes:
1. **New Panelboard**
2. **42-Circuit**
3. **Copper Neutral and Ground Bus Bars**
4. **Door-in-Door Enclosures.**

LOAD CALCULATIONS - NEW PANEL "TL"

	Connected (kVA) by Type:		Estimated Demand (kVA) by Type:		
LTG	Lighting:	21.5	Lighting at 125% (kVA):	26.9	Total Estimated Demand (kVA): 26.9
REC	Receptacles:		Receptacles:		Amps at 480Y/277V-3 Phase (Amps): 32.3
			10kVA at 100% (kVA):		Panel Ampacity (Rating): 150
			Rest at 50% (kVA):	0.0	
EQP	Equipment:		Eqp at 100% (kVA):		Spare Capacity: 78.4%
LMECH	Largest Mech:		Largest at 125% (kVA):		
MECH	Mechanical:		Rest at 100% (kVA):		

PANEL SCHEDULE - EXISTING PANEL "DP3"

LOCATION: **Building Interior** *VOLTAGE:* **480Y/277V-3Ph, 4Wire** *AMPACITY:* **400A** *Main:* **400A MLO**
FED FROM: **MDP** *ENCLOSURE:* **NEMA 1** *MOUNTING:* **Surface** *AIC:* **65,000**

BKR SIZE	DESCRIPTION	WIRING	DEMAND CODE	LOAD (VA)	Ckt #	LOAD (VA) PHASE A	PHASE B	PHASE C	Ckt #	LOAD (VA)	DEMAND CODE	WIRING	DESCRIPTION	BKR SIZE
15A-3P	EMON METER		EQP	50	1	50			2				SPARE	100A-3P
			EQP	50	3		50		4					
			EQP	50	5			50	6					
125A-3P	PANEL "TC" THROUGH 75KVA TRANSFORMER		SUB	20,000	7	20000			8				SPARE	100A-3P
			SUB	20,000	9		20000		10					
			SUB	20,000	11			20000	12					
150A-3P	PANEL "TL"		SUB	10,200	13	10200			14				SPARE	30A-3P
			SUB	6,590	15		6590		16					
			SUB	4,714	17			4714	18					
225A-3P	PANEL "EQ"		SUB	50,492	19	50492			20				SPARE	30A-3P
			SUB	50,492	21		50492		22					
			SUB	50,492	23			50492	24					
1P	SPACE ONLY				25				26				SPARE	30A-3P
1P	SPACE ONLY				27				28					
1P	SPACE ONLY				29				30					
1P	SPACE ONLY				31				32				SPARE	30A-3P
1P	SPACE ONLY				33				34					
1P	SPACE ONLY				35				36					
1P	SPACE ONLY				37				38				SPACE ONLY	30A-3P
1P	SPACE ONLY				39				40					
1P	SPACE ONLY				41				42					

	PHASE A	PHASE B	PHASE C
Total Phase Loads (VA):	80,742	77,132	75,256
Total Phase Loads (Amps):	291.5	278.5	271.7
Total Connected Loads (kVA):	233.1		

Notes:
1. **New Panelboard**
2. **42-Circuit**
3. **Copper Neutral and Ground Bus Bars**
4. **Door-in-Door Enclosures.**

LOAD CALCULATIONS - EXISTING PANEL "DP3"

	Connected (kVA) by Type:		SUBFEED PANELS		Estimated Demand (kVA) by Type:		
LTG	Lighting:		Lighting:	26.9	Lighting at 125% (kVA):	33.6	Total Estimated Demand (kVA): 245.2
REC	Receptacles:		Receptacles:		Receptacles:		Amps at 480Y/277V-3 Phase (Amps): 295.1
					10kVA at 100% (kVA):		Panel Ampacity (Rating): 400
					Rest at 50% (kVA):	0.0	
EQP	Equipment:	0.2	Equipment:	169.9	Eqp at 100% (kVA):	170.1	Spare Capacity: 26.2%
LMECH	Largest Mech:		Largest Mech:	20.8	Largest at 125% (kVA):		
MECH	Mechanical:		Mechanical:	20.8	Rest at 100% (kVA):	41.6	

PANEL SCHEDULE - NEW PANEL "TC"

LOCATION: **Building Exterior** *VOLTAGE:* **208Y/120V-3Ph, 4Wire** *AMPACITY:* **225A** *Main:* **225A MCB**
FED FROM: **MDP** *ENCLOSURE:* **NEMA 3R** *MOUNTING:* **Surface** *AIC:* **10,000**

BKR SIZE	DESCRIPTION	WIRING	DEMAND CODE	LOAD (VA)	Ckt #	LOAD (VA) PHASE A	PHASE B	PHASE C	Ckt #	LOAD (VA)	DEMAND CODE	WIRING	DESCRIPTION	BKR SIZE
60A-2P	EXTERIOR WALL CHARGER	2#4, 1#10G, 1"C	EQP	5000	1	10000			2	5000	EQP	2#4, 1#10G, 1"C	EXTERIOR WALL CHARGER	60A-2P
			EQP	5000	3		10000		4	5000	EQP			
60A-2P	EXTERIOR WALL CHARGER	2#4, 1#10G, 1"C	EQP	5000	5			10000	6	5000	EQP	2#4, 1#10G, 1"C	EXTERIOR WALL CHARGER	60A-2P
			EQP	5000	7	10000			8	5000	EQP			
60A-2P	EXTERIOR WALL CHARGER	2#4, 1#10G, 1"C	EQP	5000	9		10000		10	5000	EQP	2#4, 1#10G, 1"C	EXTERIOR WALL CHARGER	60A-2P
			EQP	5000	11			10000	12	5000	EQP			
1P	SPACE ONLY				13				14				SPACE ONLY	1P
1P	SPACE ONLY				15				16				SPACE ONLY	1P
1P	SPACE ONLY				17				18				SPACE ONLY	1P
1P	SPACE ONLY				19				20				SPACE ONLY	1P
1P	SPACE ONLY				21				22				SPACE ONLY	1P
1P	SPACE ONLY				23				24				SPACE ONLY	1P
1P	SPACE ONLY				25				26				SPACE ONLY	1P
1P	SPACE ONLY				27				28				SPACE ONLY	1P
1P	SPACE ONLY				29				30				SPACE ONLY	1P
1P	SPACE ONLY				31				32				SPACE ONLY	1P
1P	SPACE ONLY				33				34				SPACE ONLY	1P
1P	SPACE ONLY				35				36				SPACE ONLY	1P
1P	SPACE ONLY				37				38				SPACE ONLY	1P
1P	SPACE ONLY				39				40				SPACE ONLY	1P
1P	SPACE ONLY				41				42				SPACE ONLY	1P

	PHASE A	PHASE B	PHASE C
Total Phase Loads (VA):	20,000	20,000	20,000
Total Phase Loads (Amps):	166.7	166.7	166.7
Total Connected Loads (kVA):	60.0		

Notes:
1. **New Panelboard**
2. **42-Circuit**
3. **Copper Neutral and Ground Bus Bars**
4. **Door-in-Door Enclosures.**

LOAD CALCULATIONS - NEW PANEL "TC"

	Connected (kVA) by Type:		Estimated Demand (kVA) by Type:		
LTG	Lighting:		Lighting at 125% (kVA):		Total Estimated Demand (kVA): 60.0
REC	Receptacles:		Receptacles:		Amps at 208Y/120V-3 Phase (Amps): 166.7
			10kVA at 100% (kVA):		Panel Ampacity (Rating): 225
			Rest at 50% (kVA):	0.0	
EQP	Equipment:	60.0	Eqp at 100% (kVA):	60.0	Spare Capacity: 25.9%
LMECH	Largest Mech:		Largest at 125% (kVA):		
MECH	Mechanical:		Rest at 100% (kVA):		

PANEL SCHEDULE - NEW PANEL "EQ"

LOCATION: **Building Interior** *VOLTAGE:* **480Y/277V-3Ph, 4Wire** *AMPACITY:* **225A** *Main:* **225A MCB**
FED FROM: **MDP** *ENCLOSURE:* **NEMA 1** *MOUNTING:* **Surface** *AIC:* **42,000**

BKR SIZE	DESCRIPTION	WIRING	DEMAND CODE	LOAD (VA)	Ckt #	LOAD (VA) PHASE A	PHASE B	PHASE C	Ckt #	LOAD (VA)	DEMAND CODE	WIRING	DESCRIPTION	BKR SIZE
40A-3P	AIR COMPRESSOR	4#8, 1#10G, 1"C	LMECH	6925	1	17625			2	10700	EQP	3#4, 1#10G, 1 1/4"C	PAINT BOOTH	50A-3P
			LMECH	6925	3		17625		4	10700	EQP			
			LMECH	6925	5			17625	6	10700	EQP			
40A-3P	AIR COMPRESSOR	4#8, 1#10G, 1"C	MECH	6925	7	17625			8	10700	EQP	3#4, 1#10G, 1 1/4"C	PAINT BOOTH	50A-3P
			MECH	6925	9		17625		10	10700	EQP			
			MECH	6925	11			17625	12	10700	EQP			
25A-3P	FORKLIFT	3#10, 1#10G, 1"C	EQP	4542	13	15242			14	10700	EQP	3#4, 1#10G, 1 1/4"C	PREP BOOTH	50A-3P
			EQP	4542	15		15242		16	10700	EQP			
			EQP	4542	17			15242	18	10700	EQP			
20A-3P	EXHAUST FAN	4#12, 1#12G, 3/4"C	MECH	831	19	831			20				SPACE ONLY	1P
			MECH	831	21		831		22				SPACE ONLY	1P
			MECH	831	23			831	24				SPACE ONLY	1P
1P	SPACE ONLY				25				26				SPACE ONLY	1P
1P	SPACE ONLY				27				28				SPACE ONLY	1P
1P	SPACE ONLY				29				30				SPACE ONLY	1P
1P	SPACE ONLY				31				32				SPACE ONLY	1P
1P	SPACE ONLY				33				34				SPACE ONLY	1P
1P	SPACE ONLY				35				36				SPACE ONLY	1P
1P	SPACE ONLY				37				38				SPACE ONLY	1P
1P	SPACE ONLY				39				40				SPACE ONLY	1P
1P	SPACE ONLY				41				42				SPACE ONLY	1P

	PHASE A	PHASE B	PHASE C
Total Phase Loads (VA):	51,323	51,323	51,323
Total Phase Loads (Amps):	185.3	185.3	185.3
Total Connected Loads (kVA):	154.0		

Notes:
1. **New Panelboard**
2. **42-Circuit**
3. **Copper Neutral and Ground Bus Bars**
4. **Door-in-Door Enclosures.**

LOAD CALCULATIONS - NEW PANEL "EQ"

	Connected (kVA) by Type:		Estimated Demand (kVA) by Type:		
LTG	Lighting:		Lighting at 125% (kVA):		Total Estimated Demand (kVA): 159.2
REC	Receptacles:		Receptacles:		Amps at 480Y/277V-3 Phase (Amps): 191.5
			10kVA at 100% (kVA):		Panel Ampacity (Rating): 400
			Rest at 50% (kVA):	0.0	
EQP	Equipment:	109.9	Eqp at 100% (kVA):	109.9	Spare Capacity: 52.1%
LMECH	Largest Mech:	20.8	Largest at 125% (kVA):	26.0	
MECH	Mechanical:	23.3	Rest at 100% (kVA):	23.3	

MODULUS ARCHITECTS AND LAND USE PLANNING
8220 SAN PEDRO DR NE
SUITE 520
ALBUQUERQUE, NEW MEXICO 87113
PHONE (505) 338-1499
FAX (505) 338-1498

COLORADO LICENSED THOMAS F. RUEGG 63540 PROFESSIONAL ENGINEER 2/13/2024
23303

PROJECT TITLE

TESLA COLLISION CENTER

6951
S.BLACKHAWK
STREET,
BUILDING 1,
CENTENIAL, CO
80112

PROJECT MANAGER

DRAWN BY:

ISSUE / REVISION

THE RESPONSE GROUP, INC.
An Electrical Engineering Corporation
6705 Academy N.E. Suite B
Albuquerque, New Mexico 87109
Phone:(505) 323-7629 Fax:(505) 323-7594
E-mail: theresponsegroup@trg-inc.net

100% CDs

SHEET TITLE

PANEL SCHEDULES

SCALE:

JOB NO.

SHEET NUMBER

E4.02

COPYRIGHT 2021 MODULUS ARCHITECTS

Division 26: GENERAL ELECTRICAL REQUIREMENTS

1. GENERAL INSTRUCTIONS

A. GENERAL REQUIREMENTS

All requirements under Division 01 and the general and supplementary conditions of these specifications apply to this section and division. Where the requirements of this section and division exceed those of Division 01, this section and division take precedence. Become thoroughly familiar with all its contents as to requirements that affect this division, section, or both. Work required under this division includes all material, equipment, appliances, transportation, services, and labor required to complete the entire system as required by the drawings and specifications, or reasonably inferred to be necessary to facilitate the function of each system as implied by the design and the equipment specified.

The specifications and drawings for the project are complementary, and any portion of work described in one shall be provided as if described in both. In the event of discrepancies, notify the Engineer and request clarification prior to proceeding with the Work involved.

Drawings are graphic representations of the work upon which the contract is based. They show the materials and their relationship to one another, including sizes, shapes, locations, and connections. They convey the scope of work, indicating the intended general arrangement of the systems without showing all of the exact details as to elevations, offsets, control lines, and other installation requirements. Use the drawings as a guide when laying out the work and to verify that materials and equipment will fit into the designated spaces, and which when installed per manufacturers' requirements, will ensure a complete, coordinated, satisfactory, and properly operating system.

B. DEFINITIONS

Division: References contained in this specification follow the numbering system defined in the Construction Specifications Institute (CSI) MasterFormat 2004 Edition. Specification Divisions 01 through 13 provided with this project may reference the CSI MasterFormat 1995 Edition. The corresponding division references between the 2004 Edition and 1995 Edition are as follows:

2004 Edition		1995 Edition
1.	Division 21 - Fire Suppression	Division 15
2.	Division 22 - Plumbing	Division 15
3.	Division 23 - HVAC	Division 15
4.	Division 26 - Electrical	Division 16
5.	Division 27 - Communications	Division 16
6.	Division 28 - Electronic Safety and Security	Division 16

Furnish: "to supply and deliver to the project site, ready for unloading, unpacking, assembling, installing, and similar operations."

Install: "to perform all operations at the project site including, but not limited to, the actual unloading, unpacking, assembling, erecting, placing, anchoring, applying, working to dimension, finishing, curing, protecting, cleaning, testing, commissioning, starting up and similar operations, complete, and ready for the intended use."

Provide: "to furnish and install."

Furnished by Owner (or Owner-Furnished) or Furnished by Others: "an item furnished by the Owner or under other divisions or contracts, and installed under the requirements of this division, complete, and ready for the intended use, including all items and services incidental to the work necessary for proper installation and operation. Include the installation under the warranty required by this division.

Engineer: Where referenced in this Division, "Engineer" is the Engineer of Record and the Design Professional for the work under this division, and is a consultant to, and an authorized representative of the Architect, as defined in the General and/or Supplementary Conditions. When used in this division, Engineer means increased involvement by and obligations to the Engineer, in addition to involvement by and obligations to the Architect.

AHJ: The local code and/or inspection agency (Authority) Having Jurisdiction over the Work.

CLCATT: Certified Lighting Controls Acceptance Test Technician. A professional certified to perform acceptance tests and complete the documentation required for nonresidential acceptance tests as required by the California Building Energy Efficiency Standards. Technician shall be certified by an authorized lighting controls acceptance test technician certification provider.

NRTL: Nationally Recognized Testing Laboratory, as defined and listed by OSHA in 29 CFR 1910.7 (e.g., UL, ETL, CSA), and acceptable to the AHJ over this project. Nationally recognized testing laboratories and standards listed are used only to represent the characteristics required and are not intended to restrict the use of other NRTLs that are acceptable to the AHJ and standards that meet the specified criteria.

Homerun: That portion of an electrical circuit originating at a junction box, termination box, receptacle, or switch with termination at an electrical panelboard. Note: Where MC cable is utilized for receptacle and/or lighting branch circuiting loads, the originating point of the homerun shall be at the first load in the circuit or at a junction box located in an accessible ceiling space as close as possible to the first load.

Substitution: Changes in products, materials, equipment, and methods of construction from those required by the Contract Documents and proposed by Contractor. Substitutions include Value Engineering proposals.
1. Substitutions for Cause: Changes proposed by Contractor that are required due to changed Project conditions, such as unavailability of product, regulatory changes, or unavailability of required warranty terms.
2. Substitutions for Convenience: Changes proposed by Contractor or Owner that are not required in order to meet other Project requirements but may offer advantage to Contractor or Owner.

The terms "approved equal", "equivalent", or "equal" are used synonymously and shall mean "accepted by or acceptable to the Engineer as equivalent to the item or manufacturer specified". The term "approved" shall mean labeled, listed, certified, or all three, by an NRTL, and acceptable to the AHJ over this project.

C. PRE-BID SITE VISIT

Prior to submitting bid, visit the site of the proposed work and become fully informed as to the conditions under which the work is to be done. Failure to comply with this requirement shall not be considered sufficient justification to request or obtain extra compensation over and above the contract price.

D. MATERIAL AND WORKMANSHIP

Provide new material, equipment, and apparatus under this contract unless otherwise stated herein, of best quality normally used for the purpose in good commercial practice, and free from defects. Model numbers listed in the specifications or shown on the drawings are not necessarily intended to designate the required trim, written descriptions of the trim govern model numbers.

Provide markings or a nameplate for all material and equipment identifying the manufacturer and providing sufficient reference to establish quality, size, and capacity. All workmanship shall be of the finest possible by experienced mechanics of the proper trade. In general, provide the following quality grade(s) for all materials and equipment.

Commercial specification grade:

Provide all hoists, scaffolds, staging, runways, tools, machinery, and equipment required for the performance of the electrical work. Store and maintain material and equipment in clean condition, and protected from weather, moisture, and physical damage.

Furnish only material and equipment that are listed, labeled, certified, or all three, by an NRTL whenever any listing or labeling exists for the types of material and equipment specified.

At a minimum, general work practices for electrical construction shall be in accordance with NECA 1 (latest edition), "Standard Practices for Good Workmanship in Electrical Construction".

E. MANUFACTURERS

In other articles where lists of manufacturers are introduced, subject to compliance with requirements, provide products by one of the manufacturers specified.

Where a list is provided, manufacturers are listed alphabetically and not in accordance with any ranking or preference.

Where manufacturers are not listed, provide products subject to compliance with requirements from manufacturers that have been actively involved in manufacturing the specified product for no less than 5 years.

F. COORDINATION

Coordinate all work with other divisions and trades so that various components of the systems are installed at the proper time, fit the available space, and allow proper service access to those items requiring maintenance. Components which are installed without regard to the above shall be relocated at no additional cost to the Owner.

Unless otherwise indicated, the General Contractor shall provide chases and openings in building construction required for installation of the systems specified herein. Contractor shall furnish the General Contractor with information where chases and openings are required. Contractor shall keep informed as to the work of other trades engaged in the construction of the project and shall execute work in a manner as to not interfere with or delay the work of other trades.

Figured dimensions shall be taken in preference to scale dimensions. Contractor shall take his own measurements at the building, as variations may occur. Contractor shall be held responsible for errors that could have been avoided by proper checking and inspection.

Provide materials with trim that will properly fit the types of ceiling, wall, or floor finishes actually installed. Model numbers listed in the specifications or shown on the drawings are not intended to designate the required trim.

Make all offsets required to clear equipment, beams, and other structural members, and to facilitate concealing raceways in the manner anticipated in the design. Provide materials with trim that will fit properly the types of ceiling, wall, or floor finishes actually installed.

G. ORDINANCES AND CODES

Work performed under this contract shall, at a minimum, be in conformance with applicable national, state and local codes having jurisdiction. Equipment furnished and associated installation work performed under this contract shall be in strict compliance with current applicable codes adopted by the local AHJ, including any amendments and standards as set forth by the following:
1. National Fire Protection Association (NFPA)
2. Underwriters Laboratories (UL)
3. Occupational Safety and Health Administration (OSHA)
4. American National Standards Institute (ANSI)
5. American Society of Testing Materials (ASTM)
6. Rules and regulations of public utilities and municipal departments affected by connection of services.
7. Other national standards and codes where applicable.

Where the contract documents exceed the requirements of the referenced codes, standards, etc., the contract documents shall take precedence. Where conflicts between various codes, ordinances, rules, and regulations exist, comply with the most stringent.

Promptly bring all conflicts observed between codes, ordinances, rules, regulations, referenced standards, and these documents to the attention of the Architect and Engineer for final resolution. Contractor will be held responsible for any violation of the law.

Procure and pay for permits and licenses required for the accomplishment of the work herein described. Where required, obtain, pay for, and furnish certificates of inspection to Owner. Provide all safety lights, guards, and warning signs required for the performance of the work and for the safety of the public.

H. PROTECTION OF EQUIPMENT AND MATERIALS

Store and protect from damage equipment and materials delivered to job site. For materials and equipment susceptible to changing weather conditions, dampness, or temperature variations, store inside in conditioned spaces. For materials and equipment not susceptible to these conditions, cover with waterproof, tear-resistant, heavy tarp or polyethylene plastic as required to protect from plaster, dirt, paint, water, or physical damage. Equipment and material damaged by construction activities shall be rejected, and Contractor shall furnish new equipment and material of a like kind at his own expense.

Keep premises broom clean of foreign material created during work performed under this contract. Conduit, equipment, etc. shall have a neat and clean appearance at the termination of the work.

Plug or cap open ends of conduits while stored and installed during construction when not in use to prevent the entrance of debris into the systems.

I. SUBSTITUTIONS

Materials, products, equipment, and systems described in the Bidding Documents establish a standard of required function, dimension, appearance and quality to be met by the proposed substitution. The base bid shall include only the products from manufacturers specifically named in the drawings and specifications. To request a substitution, request the Substitution Request Form from the Architect or Engineer. Complete and send the Substitution Request Form for each material, product, equipment, or system that is proposed to be substituted. The burden of proof of the merit of the proposed substitution is upon the proposer.

Unless stated otherwise in writing to the Engineer by the Contractor, Contractor warrants to the Engineer, Architect, and Owner the following:
1. Proposed substitution has been fully investigated and determined to meet or exceed the specified Work in all respects unless stated otherwise in the substitution request.
2. Proposed substitution is consistent with the Contract Documents and will produce indicated results, including functional clearances, maintenance service, and sourcing of replacement parts.
3. Proposed substitution has received necessary approvals of authorities having jurisdiction.
4. Same warranty will be furnished for proposed substitution as for specified Work.
5. If accepted substitution fails to perform as required, Contractor shall replace substitute material or system with that originally specified and bear costs incurred thereby.
6. Coordination, installation and changes in the Work as necessary for accepted substitution will be complete in all respects.

No substitutions will be considered unless the Substitution Request Form is completed and attached with the appropriate substitution documentation. No substitution will be considered prior to receipt of bids unless written request for approval to bid has been received by the Engineer at least ten (10) calendar days prior to the date for receipt of bids.

If the proposed substitution is approved prior to receipt of bids, such approval will be stated in an addendum. Bidders shall not rely upon approvals made in any other way. Verbal approval will not be given. No substitutions will be considered after the contract is awarded unless specifically provided in the contract documents.

Provide factory generated point-by-point calculations for all exterior light fixtures (photometric files supplied so the engineer can generate a point-by-point do not suffice for the point-by-point calculations). Provide interior point-by-point calculations at the discretion of the engineer.

J. SUBMITTALS

Assemble and submit for review shop drawings, material lists, manufacturer product literature for equipment to be furnished, and items requiring coordination between contractors under this contract. Provide submittals in sufficient detail so as to demonstrate compliance with these Contract Documents and the design concept. Prior to transmitting submittals, verify that the equipment submitted is mutually compatible with and suitable for the intended use, will fit the available space, and maintain manufacturer recommended service clearances. If the size of equipment furnished makes necessary any change in location or configuration, submit a shop drawing showing the proposed layout.

Transmit submittals as early as required to support the project schedule. Allow two weeks for Engineer review time, plus to/from mailing time via the Architect, plus a duplication of this time for resubmittals, if required. Only resubmit those sections requested for resubmittal.

Submittals shall contain the project name, applicable specification section, submittal data, equipment identifications acronym as used on the drawings, and the Contractor's stamp. The stamp shall certify that the submittal has been checked by the Contractor, complies with the drawings and specifications, and is coordinated with other trades. Manufacturer product literature shall include shop drawings, product data, performance sheets, samples, and other submittals required by this division. Highlight, mark, list, or indicate the materials, performance criteria, and accessories that are being proposed. General product catalog data not specifically noted to be part of the specified product will be rejected and returned without review.

Submittals and shop drawings shall not contain firm name, logo, the seal, or signature of the Engineer. They shall not be copies of the work product of the Engineer. If the Contractor desires to use elements of such product, refer to paragraph "Electronic Drawing Files" for procedures to be used.

Separate submittals according to individual specification sections. Illegible submittals will be rejected and returned without review. Catalog data shall be properly bound, identified, indexed and tabbed in a 3-ring binder. Each item or model number shall be clearly marked and accessories indicated. Label the catalog data with the equipment identification acronym or number as used on the drawings and include performance curves, capacities, sizes, weights, materials, finishes, wiring diagrams, electrical requirements and deviations from specified equipment or materials. Mark out inapplicable items. Shop drawings will be returned without review if the above mentioned requirements are not met. Provide the quantity of submittals required by Division 01. If not indicated and hard-copy sets are provided, submit a minimum of six (6) copies. Refer to Division 01 for acceptance of electronic submittals for this project. For electronic submittals, Contractor shall submit the documents in accordance with the procedures specified in Division 01. Contractor shall notify the Architect and Engineer that the submittals have been posted. If electronic submittal procedures are not defined in Division 01, Contractor shall include the website, user name, and password information needed to access the submittals. For submittals sent by e-mail, Contractor shall copy the designated representatives of the Architect and Engineer. Contractor shall allow for the Engineer review time as specified above in the construction schedule. Contractor shall submit only the documents required to purchase the materials and/or equipment in the submittal.

The checking and subsequent acceptance of submittals by the Engineer and/or Architect shall not relieve the Contractor from responsibility for deviations from the drawings and specifications, errors in dimensions, details, sizes of equipment, or quantities, omissions of components or fittings, coordination of electrical requirements, and not coordinating items with actual building conditions and adjacent work. Contractor shall request and secure written acceptance from the Engineer and Architect prior to implementing any deviation.

K. ELECTRONIC DRAWING FILES

In preparation of shop drawings or record drawings, Contractor may, at his option, obtain electronic drawing files in AutoCAD or DXF format on CD-ROM disk, DVD disk, flash drive, or direct download, as desired, from the Engineer for a shipping and handling fee of $200 for a drawing set up to 12 sheets and $15 per sheet for each additional sheet. Contact the Architect for written authorization and Engineer for the necessary agreement form and to specify shipping method and drawing format. In addition to payment, the written authorization from the Architect and release agreement form from the Engineer must be received before electronic drawing files will be sent.

L. RECORD DRAWINGS (AS-BUILT DRAWINGS)

During progress of the work in this division, Contractor shall maintain an accurate record of all changes made during the installation of the system. Upon completion of the work, accurately transfer all record information to three identical sets of the approved shop drawings. Insert one set into each copy of the manual described below.

See Division 01 and General Conditions for additional information.

M. OPERATION AND MAINTENANCE INSTRUCTIONS

During the course of construction, collect and compile a complete brochure of equipment furnished and installed on this project. Include operational and maintenance instructions, manufacturer's catalog sheets, wiring diagrams, parts lists, approved submittals and shop drawings, warranties, and descriptive literature as furnished by the equipment manufacturer. Include an inside cover sheet that lists the project name, date, Owner, Architect, Engineer, General Contractor, Sub-Contractor, and an index of contents.

Submit three copies of literature bound in approved binders with index and tabs separating equipment types to the Architect, for Engineer's review, at the termination of the work. Paper clips, staples, rubber bands, loose-leaf binding, and mailing envelopes are not considered approved binders. Final approval of systems installed under this contract shall be withheld until this equipment brochure is received and deemed complete by the Architect and Engineer. Instruct workmen to save required literature shipped with the equipment itself for inclusion in this brochure.

Include Record Drawings as described above.

Refer to Division 01 for acceptance of electronic manuals for this project. For electronic manuals, refer to paragraph "Submittals" for requirements.

N. TRAINING

At a time mutually agreed upon between the Owner and Contractor, provide the services of a factory trained and authorized representative to train Owner's designated personnel on the operation and maintenance of the equipment provided for this project.

Provide training to include, but not be limited to, an overview of the system and/or equipment as it relates to the facility as a whole; operation and maintenance procedures and schedules related to startup and shutdown, troubleshooting, servicing, preventive maintenance and appropriate operator intervention; and review of data included in the operation and maintenance manuals.

Submit a certification letter to the Architect stating that the Owner's designated representative has been trained as specified herein. Letter shall include date, time, attendees and subject of training. The Contractor and the Owner's representative shall sign the certification letter indicating agreement that the training has been provided.

Schedule training with Owner with at least 7 days advance notice.

O. WARRANTIES

Warrant each system and each element thereof against all defects due to faulty workmanship, design, or material for a period of 12 months from date of Substantial Completion, unless specific items are noted to carry a longer warranty in these construction documents or manufacturer's standard warranty exceeds 12 months. Remedy all defects occurring within the warranty period(s) as stated in the General Conditions and Division 01.

Warranties shall include labor and material, including travel expenses. Make repairs or replacements without any additional costs to the Owner, and to the satisfaction of the Owner, Architect, and Engineer.

Perform the remedial work promptly, upon written notice from the Engineer or Owner.

Also warrant the following additional items:
1. All raceways are free from obstructions, holes, crushing, or breaks of any nature.
2. All raceway seals are effective.
3. The entire electrical system is free from all short circuits and unwanted open circuits and grounds.

At the time of Substantial Completion, deliver to the Owner all warranties, in writing and properly executed, including term limits for warranties extending beyond the one year period and any actions the Owner must take in order to maintain warranty status. Each warranty instrument shall be addressed to the Owner and state the commencement date and term.

2. GENERAL MATERIALS AND INSTALLATION

A. BUILDING OPERATION

Comply with the schedule of operations as outlined in the architectural portions of this specification. Building shall be in operation at all times. Accomplish work requiring interruption of building operation at a time when the building is not in operation and only with written approval of building Owner and/or tenant. Coordinate interruption of building operation with the Owner and/or tenant a minimum of seven (7) days in advance of work.

B. EXISTING EQUIPMENT REUSE AND REMOVAL

Provide all demolition of existing electrical systems and new electrical system modifications required because of building remodeling, as noted on the Drawings, or necessary for proper operation and new construction. Remove all abandoned cables and wiring and conduit above accessible ceilings and ventilation shafts.

Remove all existing wiring, light fixtures, exposed conduits, and other electrical installations not reused prior to substantial completion of the work.

Existing raceways may be reused if their points of terminations are suitable; if they are clean inside with no evidence of rust or burrs; if free from cracks, flattened sections, or sharp bends; and, if suitably located to avoid conflicts with other trades or installations. Carefully "fish" all existing conduits reused under this contract to remove all debris and obstructions, and swab until all moisture is removed.

Cut, patch, and repair where required for new electrical installations, and patch and repair all surface damage resulting from this work. Cut flush with the floor and plug at both ends raceways stubbed above the floor and not used at substantial completion of the work.

Relocate all existing electrical systems required to be in operation at substantial completion of the contract, if required, as a result of work included under this contract, even if not specifically indicated in the drawings or specifications.

Existing service entrance conductors and feeder conductors may be reused if all of the following conditions are met:
1. Conductor sizes meet or exceed the sizes specified on the drawings.
2. Conductor insulation is in good or better condition.
3. Conductor insulation is the correct type for the conditions.

C. EXCAVATION AND BACKFILLING

Perform excavation and backfill required for installation of underground work under this contract. Trenches shall be of sufficient width. Crib or brace trenches to prevent cave-in or settlement. Do not excavate trenches close to columns and walls of new building without prior consultation with the Architect. Use pumping equipment if required to keep trenches free of water. Backfill trenches in maximum 6-inch layers of well tamped dry earth in a manner to prevent future settlement.

Excavation as specified herein shall be classified as common excavation. Common excavation shall comprise the satisfactory removal and disposition of material of whatever substances and of every description encountered, including rock, if any, within the limits of the work as specified and shown on the drawings. Excavation shall be performed to the lines and grades indicated on the drawings. Dispose of excavated materials that are considered unsuitable for backfill, and surplus of excavated material, which is not required for backfill, all to the satisfaction of the Engineer.

D. COINCIDENTAL DAMAGE

Repair streets, sidewalks, drives, paving, walls, finishes, and other facilities damaged in the course of this Work. Repair materials shall match existing construction. Repair materials shall generally match existing construction. Repair work shall meet all requirements of the Owner, local authorities having jurisdiction, and meet the satisfaction of the Architect. Repair work shall be thoroughly first class.

E. CUTTING AND PATCHING

Conform to the requirements in Division 01. Cut walls, floors, ceilings, and other portions of the facility as required to install work under this division. Obtain permission of the Architect prior to cutting. Do not cut or disturb structural members without prior approval from the Architect. Cut holes as small as possible. Patch walls, floors, and other portions of the facility as required by work under this division. Patching shall match the original material and construction including fire ratings, if applicable. Repair and refinish areas disturbed by work to the condition of adjoining surfaces in a manner satisfactory to the Architect.

F. ROUGH-IN

Coordinate without delay all roughing-in with other divisions. Conceal all conduit and raceways except in unfinished areas and where otherwise indicated on the drawings.

G. CONCRETE BASES

Provide concrete bases (e.g., housekeeping pads) for equipment where indicated on the drawings and as specified herein. Concrete bases shall have chamfered edges. Size of base shall be a minimum of 4 inches greater than the footprint of the equipment that it is supporting and shall have a minimum height of 3-1/2 inches.

Construct equipment bases of a minimum 28-day, 4000-psi concrete conforming to American Concrete Institute Standard Building Code for Reinforced Concrete (ACI 318) and the latest applicable recommendations of the ACI standard practice manual. Concrete shall be composed of cement conforming to ASTM C 150 Type I, aggregate conforming to ASTM C33, and potable water. Exposed exterior concrete shall contain 5 to 7 percent air entrainment.

Unless otherwise specified or shown on the structural drawings, reinforce equipment bases with No. 4 reinforcing bars conforming to ASTM A615 or 6x6 - W2.9 x W2.9 welded wire mesh conforming to ASTM A185. Place reinforcing bars 24 inches on center with a minimum of two bars each direction.

Provide galvanized anchor bolts for equipment placed on concrete bases or on concrete slabs. Anchor bolts size, number, and placement shall be as recommended by the manufacturer of the equipment.

H. SUPPORT SYSTEMS

Steel Slotted Support Systems (Slotted Channel): Comply with MFMA-3, factory-fabricated components for field assembly; 12-gauge, 1-5/8-inch by 1-5/8-inch.

Finishes:
1. Metallic Coatings: Hot-dip galvanized after fabrication and applied according to MFMA-3.

Aluminum Slotted Support Systems (Slotted Channel): Comply with MFMA-3, Type 6063-T6, per ASTM B221; factory-fabricated components for field assembly; 12-gauge, 1-5/8-inch by 1-5/8-inch.

Manufacturers: Cooper B-Line, ERICO International, Hilti, Power-Strut, Thomas and Betts, or Unistrut.

Field Fabrication:

Where field cutting of standard lengths of channel are required, make cuts straight and perpendicular to manufactured surfaces.

For field-cut or damaged surfaces of coated channels, dress cut ends, damaged surfaces, or both, with an abrasive material (e.g., file, grinding stone, or similar) and cleanser to remove oils, rust, sharp edges, and shards.

For channel with a factory-applied coating, re-finish cut edges with a coating compatible with the factory finish and as recommended by the manufacturer (e.g., manufacturer's touch-up paint or zinc-rich cold-galvanizing compound, as applicable).

I. ACCESS DOORS

Provide access doors for all concealed equipment where indicated or as required, except where above lay-in ceilings. Access doors shall be adequately sized for the devices served with a minimum size of 18 inches x 18 inches. Access doors must be of the proper construction for the type of construction in which it is installed. Obtain Architect's approval of type, size, location and color before ordering. Provide factory-fabricated and assembled units, complete with attachment devices and fasteners ready for installation, concealed hinges, flush screwdriver-operated cam lock, and anchor straps. Provide access doors manufactured by: Bar-Co, J.L. Industries, Karp Associates, Milcor, Nystrom Building Products, Wade, or Zum.

J. PENETRATIONS

Coordinate sleeve selection and application with selection and application of fire-stopping specified in Division 07 section "Through-Penetration Firestop Systems."

Roofs:
1. Coordinate all roof penetrations with Engineer, Owner, and as applicable, the roofing contractor providing a roof warranty.

2. Keep all raceway penetrations within mechanical equipment curbs wherever possible. Coordinate with Division 01.

3. Flash and counterflash all openings through roof, and/or provide pre-fabricated molded seals compatible with the roof construction installed, or as required by the Engineer, Owner, or roofing contractor. All roof penetrations shall be leaktight at the termination of the work and shall not void any new or existing roof warranties.

Walls and Floors:
1. Steel Pipe Sleeves for Raceways and Cables: ASTM A53/A53M, Type E, Grade B, Schedule 40, galvanized steel, plain ends, and drip rings.

2. Cast-Iron Pipe Sleeves for Raceways and Cables: Cast or fabricated "wall pipe," equivalent to ductile-iron pressure pipe, with plain ends and integral waterstop, unless otherwise indicated.

3. Sleeves for Rectangular Openings: Galvanized sheet steel with minimum 0.052 inch thickness and of length to suit application.

K. FIRESTOPPING

Sealants and accessories shall have fire-resistance ratings indicated, as established by testing identical assemblies in accordance with UL 2079 or ASTM E 814, or with NRTL accepted by AHJ.

Manufacturers: Hilti, RectorSeal, Specified Technologies Inc., United States Gypsum Company, or 3M corp.

Through and Membrane Penetration Firestopping Systems Product Schedule: Provide UL listing, location, wall or floor rating, and installation drawing for each penetration fire stop system.

Where project conditions require modification to qualified testing and inspecting agency's illustrations for a particular firestopping condition, submit illustration, with modifications marked, approved by penetration firestopping manufacturer's fire-protection engineer as an engineering judgment or equivalent fire-resistance-rated assembly. Include qualifications data for testing agency.

L. EQUIPMENT FURNISHED BY OTHERS

Provide necessary equipment and accessories that are not provided by the equipment supplier or Owner to complete installation of equipment furnished by others in locations as indicated on the drawings, specified herein, or both. Equipment and accessories not provided by the equipment supplier may include, but not be limited to, flexible cords and plugs as required for proper operation of the complete system, in accordance with the manufacturers' instructions.

Contractor shall be responsible for correct rough-in dimensions, and verify them with Architect and/or equipment supplier prior to rough-in and service installations.

M. SYSTEM TESTING AND ADJUSTING

Adjust, align, and test all electrical equipment on this project provided under this division and all electrical equipment furnished by others for installation or wiring under this division for proper operation.

Test all systems and equipment according to the requirements in NETA ATS (latest edition) and all additional requirements specified in following sections.

Maintain the following on the project premises at all times: a true RMS reading voltmeter, a true RMS reading ammeter, and a megohmmeter insulation resistance tester. Provide test data readings as requested or as required by the Engineer.

N. SEISMIC CONTROLS FOR MEPF SYSTEMS

Seismic Protection Criteria:

Risk/Occupancy Category:	I, II or III
Site Soil Category:	Contractor's Seismic Engineer To Determine.
Seismic Design Category:	Contractor's Seismic Engineer To Determine.
Component Importance Factor:	Determined From ASCE 7-2010.

The Contractor shall be responsible for determining the requirements for seismic bracing of mechanical, electrical, and plumbing systems. Seismic protection criteria used to determine seismic bracing requirements of all mechanical, electrical, and plumbing systems shall be determined by the applicable code adopted in the project jurisdiction. Where not already determined within the contract documents, the Contractor shall be responsible for contracting a licensed professional engineer to establish building site class, seismic design category, seismic zone, or any other criteria necessary to determine the requirements for seismic bracing on mechanical, electrical, and/or plumbing systems.

Seismic bracing of fire protection systems shall be installed in strict accordance with the provisions of NFPA 13 (2010 or later edition).

The Contractor shall determine the type and location of seismic bracing required for the mechanical, electrical, and plumbing elements shown on the drawings based on the established seismic criteria, the size and weight of the supported element, and the distance from structure of the supported element.

The Contractor shall submit the following shop drawing information to the AHJ and the Engineer for review and approval:
1. Seismic analysis listing all applicable seismic design criteria.
2. Descriptive catalog data of seismic bracing materials.
3. Shop drawings showing bracing type and location.
4. Installation details of all bracing used.
5. Calculations showing that the seismic restraints meet the seismic requirements.

Shop drawings and calculations shall be signed and sealed by a registered professional engineer, licensed in the state of the project and employed by the manufacturer of the seismic bracing products. Calculations shall include dead loads, static seismic loads, and capacity of materials utilized for connections.

Seismic bracing, restraints, isolators, and isolation materials shall be of the same manufacturer and shall be certified by the manufacturer. Approved manufacturers are: AmberBooth Company, Inc., B-Line/Tolco, Kinetics Noise Control, Inc., Loos & Company, Inc., Mason Industries, Inc., Uni-strut, or Vibro-Acoustics. Each device shall have a pre-approval number from California OSHPD or other recognized government agency showing maximum restraint ratings.

Seismic bracing measures to be applied to mechanical, electrical, and plumbing equipment/systems and shall be installed in strict accordance with all applicable local, state, and/or federal codes as well as manufacturer's requirements. The most stringent criteria shall apply. All anchor connections to structure for support of mechanical and electrical equipment, regardless of the need for seismic restraints, shall be shown on shop drawings.

O. EQUIPMENT IDENTIFICATION

Provide equipment identification nameplates on all switchboards, panelboards, electrical equipment enclosures, access doors, transformers, disconnect switches, enclosed circuit breakers, motor starters, feeder devices in switchboards, distribution panelboards, and motor control centers[and where indicated on the drawings].

Nameplates:
1. Engraved, contrasting color, three-layer, laminated plastic, indicating the name of the equipment, load, or circuit as designated on the drawings and in the specifications:
2. Field-applied permanent epoxy adhesive, compatible with the equipment finis

Attachment method shall be acceptable to the manufacturers of the equipment to which the nameplates are being applied.

Nameplate Color:
1. Black [insert other color] background with white [insert other color] letters for Normal Power;
Letter height: 3/8 inch minimum .

P. SYSTEM START UP

Perform the following prior to starting up the electrical systems:
1. Check all components and devices and lubricate items accordingly.
2. Tighten screws and bolts for connectors and terminals according to manufacturer's published torque-tightening values. If manufacturer's torque values are not indicated, use those specified in UL 486A and UL 486B.
3. Adjust taps on each transformer for rated secondary voltage when the transformer is at minimum load.
4. Check and record building's service entrance voltage, grounding conditions, grounding resistance, and proper phasing.
5. Replace all burned-out lamps and lamps used for temporary construction lighting in permanent light fixtures.
6. Balance all single-phase loads at each panelboard, redistributing branch circuit connections until balance is achieved. Do not type up final panelboard directories until all re-balancing and redistribution of circuits are complete. Turn on all loads in an attempt to maximize the load on the panel and take ampere readings on each of the phases before redistributing circuits and balancing the panel.
7. After all systems have been inspected and adjusted, confirm all operating features required by the drawings and specifications and make final adjustments as necessary.

Q. POWER SYSTEM STUDY

A. Provide comprehensive power system study evaluating the project electrical system that includes the following components:
1. Fault Current Study per IEEE 399, 141 and 242
2. Coordination Study per IEEE 399 and 242
3. Arc-Flash Hazard Study per NFPA 70E and IEEE 1584

B. Power System Study shall be performed using SKM software.

C. Delegated Design: Power System Study shall be performed, signed and sealed by a professional engineer licensed in the project jurisdiction.

D. Power System Study shall include fault current study that calculates:
1. Maximum symmetrical and asymmetrical fault currents at all system circuit breakers and buses.
2. Calculated X/R ratio for all circuit breakers and buses.
3. Maximum and minimum 1/2-cycle short circuit currents.
4. Minimum interrupting duty from 5-cycles to 2-seconds.
5. Maximum and minimum ground-fault currents.

E. Power System Study shall include time-current curve coordination of system circuit breakers as defined in IEEE 399. Study shall provide recommendations for circuit breaker adjustable settings to achieve system coordination.

F. Arc-Flash hazard analysis shall include calculation of incident energy, approach boundaries, and required protection equipment for all buses and circuit breakers.

G. Provide comprehensive Power System Study report which includes:
1. One-line Diagram of Electrical System and all components.
2. Listing of all buses and circuit breakers with fault current, equipment ratings and determination of acceptable condition.
3. Listing of all buses and circuit breakers with arc-flash incident energy and recommended personal protective equipment (PPE).
4. Coordination study with time-current coordination curves for all major buses, overcurrent protection devices and equipment.
5. Explanation of study processes and procedures.
6. Summary of recommendations and concerns.

H. Provide and apply arc-flash warning labels to all equipment evaluated in accordance with NFPA 70E. At minimum, labels shall include available fault, incident energy, arc flash boundary, and study date.

THE RESPONSE GROUP, INC.
An Electrical Engineering Corporation
6705 Academy N.E. Suite B
Albuquerque, New Mexico 87109
Phone:(505) 323-7629 Fax:(505) 323-7594
E-mail: theresponsegroup@trg-inc.net

100% CDs

MODULUS ARCHITECTS
AND LAND USE PLANNING
8220 SAN PEDRO DR NE
SUITE 520
ALBUQUERQUE, NEW MEXICO 87113
PHONE (505) 338-1499
FAX (505) 338-1498

COLORADO LICENSED
THOMAS F. RUEHLE
63540
PROFESSIONAL ENGINEER
2/13/2024
23303

PROJECT TITLE

TESLA COLLISION CENTER

6951 S.BLACKHAWK STREET, BUILDING 1, CENTENIAL. CO 80112

PROJECT MANAGER

DRAWN BY:

ISSUE / REVISION

SHEET TITLE

ELECTRICAL SPECIFICATIONS

SCALE:

JOB NO.

SHEET NUMBER

E5.00

COPYRIGHT 2021 MODULUS ARCHITECTS

Division 26: BASIC ELECTRICAL MATERIALS AND METHODS

1. RACEWAYS

A. METALLIC CONDUIT AND TUBING

Electrical Metallic Tubing, Couplings, and Fittings (EMT): ANSI C80.3, UL 797. Only steel products allowed. Reduced wall EMT is not allowed.

Flexible Metal Conduit (FMC): Zinc-coated steel or aluminum, UL 1. Reduced-wall FMC is not allowed.

Intermediate Metal Conduit (IMC): Hot-dip Galvanized Rigid Steel Conduit, ANSI C80.6, UL 1242.

Liquidtight Flexible Metal Conduit (LFMC): Flexible steel conduit with PVC jacket, UL 360; fittings: NEMA FB 1.

Rigid Metal Conduit (RMC):
1. Hot-dip Galvanized Rigid Steel Conduit (GRS): ANSI C80.1, UL 6.
2. Rigid Aluminum Conduit (RAC): ANSI C80.5, UL 6A.

Plastic-Coated IMC, RMC, and Fittings: NEMA RN 1, NRTL listed. Coating thickness of 0.04 inches minimum.

IMC and RMC Fittings: NEMA FB 1; compatible with conduit type and material, NRTL listed.

Manufacturers: AFC Cable, Allflex, Anamet Electrical, Electri-Flex, Indalex, Manhattan/CDT/Cole-Flex, O-Z/Gedney, Republic Raceway, Tyco International, Western Tube and Conduit, or Wheatland Tube.

B. NON-METALLIC CONDUIT AND TUBING

Rigid Nonmetallic Conduit (RNC): Schedule 40 PVC, 90 deg C rated, NEMA TC-2, UL 651

Fittings: NEMA TC 3, TC 6; UL 651, compatible with conduit/tubing type and material, NRTL listed.

Manufacturers: AFC Cable, American International, Anamet Electrical, Amco, Cantex, Certainteed, Condux International, Elecsys, Electri-Flex, Lamson and Sessions, Manhattan/CDT/Cole-Flex, Prime Conduit, Raco, Spiralduct, Superflex Ltd, or Thomas and Betts.

2. RACEWAY INSTALLATION

A. GENERAL RACEWAY INSTALLATION REQUIREMENTS

Install raceways parallel and perpendicular to building lines.

Install raceways to requirements of structure, to requirements of all other work on the project, and to clear all openings, depressions, pipes, ducts, reinforcing steel, and other immovable obstacles.

Install raceways set in forms for concrete structure in such a manner that installation will not affect the strength of the structure.

Except where approved in writing by the Engineer, install no raceway in a slab-on-grade. Locate raceway below granular fill below slabs-on-grade.

Install raceways continuous between connections to outlets, boxes, and cabinets with a minimum possible number of bends and not more than the equivalent of four 90-degree bends between connections. Use manufactured elbows for all 45- and 90-degree bends, unless approved by the Engineer in advance. Make other bends smooth and even and without flattening raceway or flaking galvanizing or enamel. Radii of bends shall be as long as possible and never shorter than the corresponding trade elbow.

Use long radius elbows for all underground installations, where necessary, or where otherwise indicated.

Securely fasten raceways in place with approved straps, hangers, and steel supports as required. Attach raceway supports to the building structure. Hang single raceways for feeders with malleable split ring hangers with rod and turnbuckle suspension from inserts spaced not over 10 feet apart in construction above. Clamp groups of horizontal feeder raceways to steel channels that are suspended from inserts spaced not over 10 feet apart in construction above. Securely clamp vertical feeder raceways to structural steel members attached to structure. Install cable clamps for support of vertical feeders where required. Add raceway supports within 12 inches of all bends, on both sides of the bends. Do not support raceways from suspended ceiling components.

Ream raceway ends, thoroughly clean raceways before installation, and keep clean after installation. Plug or cover openings and boxes as required to keep raceways clean during construction and fish all raceways clear of obstructions before pulling conductor wires. Provide raceways of ample size for pulling of wire, not smaller than code requirements and not less than 1/2-inch in size, unless indicated otherwise on Drawings. Homeruns containing more than one branch circuit shall not be less than 3/4-inch in size.

Protect all raceway installations against damage during construction. Repair all raceways damaged or moved out of line after roughing-in to meet Engineer's approval without additional cost to the Owner.

Align and install true and plumb all raceway terminations at panelboards, switchboards, motor control equipment, and junction boxes.

Install approved expansion/deflection fittings where raceways pass through (if embedded) or across (if exposed) expansion joints, and when using RNC or RAC in exposed environments in accordance with NFPA 70 and expansion/contraction properties of RNC or RAC.

Install a pull wire in each empty raceway that is left for installation of conductors or cables under other divisions or contracts. Use polypropylene or monofilament plastic line with not less than 200-lb tensile strength. Leave at least 24 inches of slack at each end of pull wire.

Make all joints and connections in a manner that will ensure mechanical strength and electrical continuity.

B. ABOVE GROUND RACEWAY USE:

Install all circular raceways concealed above suspended ceilings or concealed in walls or floors wherever possible except where otherwise indicated. Provide GRS for all conduits exposed to weather or other hazardous conditions.

Unless noted otherwise, all other raceway may be EMT where approved by local code. Use compression type fittings for EMT, with all fittings NRTL listed for the environment in which they are used. Unless noted otherwise, set-screw type fittings are not allowed.

C. UNDERGROUND RACEWAY USE:

Provide GRS installed below grade with a corrosion-resistant bonded-plastic or approved mastic coating. This shall include the 90-degree elbow below grade and the entire vertical transition to above grade.

RNC conduit may be used underground where permitted by local code and where not specifically restricted by these documents. When used, provide plastic-coated GRS, as specified above, for all bends greater than 30 degrees, including the 90-degree elbows below grade and the entire vertical risers for transitions from below to above grade or above slab.

D. EQUIPMENT CONNECTIONS

Use FMC for final connection to each motor, transformer, and any device that would otherwise transmit motion, vibration, or noise. Use LFMC where exposed to liquids, vapors, or sunlight. Provide all FMC and LFMC with an insulated bonding conductor.

Use only metal raceways for all power wiring from the output of variable frequency drives to their respective motors.

3. BUSHINGS AND LOCKNUTS

Rigidly terminate conduits entering sheet metal enclosures to the enclosure with a bushing and locknut on the inside and a locknut or an approved hub on the outside. Conduit shall enter the enclosure squarely.

Provide bushings and locknuts made of galvanized malleable iron with sharp, clean-cut threads.

Where EMT enters a box, provide approved EMT compression connectors.

Use insulated, grounding, or combination bushings wherever connection is subject to vibration or moisture, when required by NFPA 70 or both.

4. CONDUCTORS AND CABLES

Annealed (soft) copper complying with ICEA S-95-658/NEMA WC70 and UL standards 44 or 83 as applicable.

Aluminum conductor option:
Compact stranded, aluminum alloy (AA-8000 series), complying with ICEA S-95-658/NEMA WC70; No. 1/0 AWG or larger only.

Terminations: Tinned, compression [mechanical] type only; NRTL-listed for copper and aluminum conductors at 75 degrees C minimum.

Increase the raceway size as required, at no additional cost to the Owner, to accommodate the increased size of the aluminum Conductors.

Aluminum conductor size shall meet or exceed the ampere rating of the scheduled copper conductors at 75 degrees C.

Option applies only for the following feeders or services No. 2 AWG and larger (based on copper conductors):
1. Service entrance conductors.
2. Feeders to switchboards.
3. Feeders to panelboards. Exception: Apartment unit load center feeder conductors shall be copper; aluminum is not acceptable.
4. Feeders to motor control centers.
5. Feeders to transformers

Where aluminum conductors terminate existing panelboards, switchboards or switchgear that utilize compression connections use hydraulic-compression type connectors with a zinc base, anti_oxidizing compound. Use compression tools of the type that will not release unless the correct pressure has been applied.

Measure the temperature of all aluminum conductors at all splices and terminations. Make each test under typical building load Conditions after the building is occupied and in operation for a minimum of two weeks. Replace all joints or splices indicating excessive heating.

Take measurements with a non_contact type infrared thermometer, with target size not exceeding one inch at five feet and an accuracy of two percent or better. Submit the meter specifications and calibration date with the test results.

Aluminum Conductor Manufacturer: General Cable or approved equal.

Conductor Insulation Types: 90-degree C-rated, Type THHN/THWN-2 or XHHW-2 complying with ICEA S-95-658/NEMA WC70.

Sizes of conductors and cables indicated or specified are in American Wire Gage (AWG - Brown and Sharpe).

All feeder and branch circuit conductors No. 8 AWG and larger: Stranded.

All conductors, No. 10 AWG and smaller: Solid copper.

All Branch Circuit Wiring: Not smaller than No. 12 AWG. If no conductor size is indicated on the Drawings for a branch circuit, provide conductors and conduit sized per NFPA 70 and based on the indicated branch circuit overcurrent protective device (OCPD) rating and number of poles. Where no circuit size (i.e., conductors and OCPD) is indicated on the drawings for a branch circuit, provide three No. 12 AWG conductors, in 3/4-inch raceway, and a 20A circuit breaker.

Control Wiring: Stranded copper conductors, 600V insulation, of the proper type, size, and number as required to accomplish specified function. Minimum size: No. 14 AWG, unless noted otherwise.

Flexible Cords and Cables: Stranded copper conductors for all, unless noted otherwise.

Special Purpose Conductors And Cables, Such As Low Voltage Control And Shielded Instrument Wiring: As recommended by the system equipment manufacturer unless indicated otherwise.

Copper Conductor Manufacturers: Advance Wire and Cable, AFC Cable, Alan Wire, Allflex, American Insulated Wire, Encore Wire, Northern Cables, Okonite, or Southwire.

Connections: Apply a zinc based anti_oxidizing compound to connections. Do not use terminals on wiring devices to feed through to the next device.

5. CONDUCTORS AND CABLES INSTALLATION

Install all wiring in approved raceway and enclosures, except
where specified or indicated for low-voltage wiring, where specified or indicated for direct-buried cables, or where type MC cable is indicated or specified as acceptable.

Install all conductors and cables in raceways continuous without taps or splices. Splice or tap only in approved boxes and enclosures with approved solderless connectors, or crimp connectors and terminal blocks for control wiring, and keep to the minimum required. Insulate all splices, taps, and joints as required by codes.

All materials used to terminate, splice, or tap conductors: designed for, properly sized for, and NRTL listed for the specific application and conductors involved, and installed in strict accordance with the manufacturer's recommendations, using the manufacturer's recommended tools.

Where wiring is indicated as installed, but the connection is indicated "FUTURE" or "BY OTHER DIVISION, TRADES, OR CONTRACTS", leave a minimum 3-foot "Pigtail" at the box, tape the ends of the conductors, and cover the box.

In general, the direction of branch circuit "home run" routing is indicated on the drawings, complete with circuit numbers and panelboard designation. Continue all such "home run" wiring to the designated panelboard, as though "circuit runs" were indicated in their entirety.

The number of conductors in a specific raceway "home run" is indicated with cross lines (tick marks) on each "circuit run" on the drawings.

Common or shared neutrals are not allowed unless shown on the drawings to be used or specifically noted to be allowed.

Where multi-wire branch circuits (i.e., shared neutral) are allowed, they shall be provided with a means that will simultaneously disconnect all ungrounded conductors at the point the branch circuit originates. Multi-pole breakers or 3 single-pole breakers with a handle tie are two examples.

When multiple home runs are combined into a single raceway such that the number of conductors exceeds four (conductor count is made up of any combination of phase and neutral conductors), the following restrictions apply, which are in addition to those in NFPA 70

Normal or Non-Essential circuits:

1. Maximum of 16 conductors in a single raceway. For up to eight conductors in a raceway, minimum raceway size: 3/4-inch. For greater than eight conductors, minimum raceway size: 1-inch. Do not install any other type of circuit in this raceway.

2. Minimum wire size for all conductors in this raceway: No. 10 AWG.

3. Only 15A and 20A branch circuit homeruns may be combined into one raceway.

GFCI circuits:

1. Do not use multi-conductor circuits, with a shared neutral, for any GFCI circuit breaker or receptacle circuit.

For branch circuits fed from GFCI circuit breakers, limit the one-way conductor length to 100 feet between the panelboard and the most remote receptacle or load on the GFCI circuit.

Properly identify all terminal blocks and wire terminals for control wiring with vinyl stick-on markers or equivalent. Provide Engineer with a list of proposed identifying numbers for review prior to installing markers.

Provide an equipment-grounding conductor or bonding jumper, as applicable, in all feeders and branch circuits, sized in accordance with NFPA 70 Tables 250.66 or 250.122 as applicable, unless indicated as larger on the drawings.

Voltage drop in branch circuits shall not exceed 3 percent.

Wiring shall have insulation of the proper color to match color code system in the table below unless there is a color system currently in use by the facility, in which case the colors are to match the existing system. In larger sizes where properly colored insulation is not available, use vinyl plastic electrical tape of the appropriate color around each conductor at all termination points, junctions, and pull boxes.

System Voltage:

240V and under, including 208Y/120, 120/240, 120/208, and 240D/120 systems:
1. Phase A: Black.
2. Phase B: Red [orange].
3. Phase C: Blue.
4. Neutral: White.
5. Equipment Ground: Green.
6. Isolated Ground: Green with yellow stripe.

480V and 480Y/277V

1. Phase A: Brown
2. Phase B: Orange [Purple]
3. Phase C: Yellow
4. Neutral: Gray
5. Equipment ground: green.

6. MC CABLE

A. CABLE SPECIFICATIONS

Metal-clad cable (MC Cable): 600V, unjacketed; UL Standard 83, 1569, and 1685; NFPA 70 Article 330 aluminum or galvanized steel interlocked armor; THHN- or XHHW-insulated conductors; color code: ICEA Method 1, with green insulated grounding conductor; listed for use in UL 1, 2, and 3 hour through-penetration firestop systems. MC Cable manufacturers: AFC Cable Systems, Encore Wire Corporation, Kaf-Tech, or Southwire.

B. APPLICATIONS OF MC CABLE

1. In lieu of flexible conduit and wiring from light fixtures located in accessible ceilings to junction boxes attached to building structure directly above the ceiling. Provide cable whips of sufficient lengths to allow for relocating each light fixture within a 5 foot radius of its installed location, but not exceeding 6 feet in unsupported lengths.

2. For vertical drops in stud walls.

3. In lieu of EMT, only for 15A and 20A branch circuits (with up to four (4) conductors, not including ground conductor), and only in dry concealed locations above grade, except where specifically not permitted by NFPA 70 owner, landlord, ahj, or noted in list below.

C. PROHIBITED USE OF MC CABLE UNLESS NOTED ABOVE

Examples of those uses include, but are not limited to the following:

1. Homeruns to panelboards (refer to Section 26: Definitions).
2. Where exposed to view.
3. Where exposed to damage.
4. Hazardous locations.
5. Wet locations.
6. When restricted otherwise.
7. When specifically disallowed by the local AHJ.
8. When specifically disallowed by the landlord.
9. Circuits supplied by an emergency or standby power source.

7. MC CABLE INSTALLATION

Secure and support cable per NFPA 70 Article 330 Secure cable within 12 inches of every box or fitting. Securing and supporting intervals shall not exceed six feet. Maintain consistent spacing to avoid derating due to bundling per NFPA 70 Section 310.15 Utilize steel cable hangers, Arlington SMC series or equivalent, to support wherever possible so cables can be routed in a neat and workmanship like manner.

8. JUNCTION BOXES, PULL BOXES, CABINETS, AND WIREWAYS

Provide junction boxes, pull boxes, cabinets, and wireways wherever necessary for proper installation of various electrical systems according to NFPA 70 and where indicated on the drawings. Size as required for the specific function or as required by NFPA 70 whichever is larger. Construction shall be of a NEMA design suitable for the environment installed.

Junction boxes installed behind wall cases and in or on other store fixtures, except where otherwise specified, shall be 4 inches square or larger with galvanized covers.

Horizontally mount junction boxes under center fixtures (and cases), handy boxes or 4-inch square boxes with tops of boxes not more than 3-1/2 inches above the floor. Size junction boxes to adequately contain all required conductors and splices.

9. OUTLET BOXES

All outlets including light fixture, switch, receptacle, and similar outlets: galvanized steel knockout boxes, suitable in design to the purpose they serve and the space they occupy. Size as required for the specific function or as required by NFPA 70, whichever is larger. Set all outlet boxes in walls, columns, floors, or ceilings so they are flush with the finished surface, accurately set, and rigidly secured in position. Provide plaster rings, extension rings and/or masonry rings as required for flush mounting. Provide approved cast outlet boxes with hubs and weatherproof covers in all areas subject to damp, wet, or harsh conditions.

Manufacturers: Appleton, Cooper, Erikson Electrical, Hoffman, Killark Electric, O-Z/Gedney, Raco, Robroy Industries, Scott Fetzer, Spring City Electrical, Thomas and Betts, Walker Systems, or Woodhead.

10. OUTLET LOCATIONS

Coordinate locations of outlet boxes. Outlets are only approximately located on the small scale drawings. Use great care in the actual location by consulting the various large scale detailed drawings used by other division trades, and by securing definite locations from the Architect.

11. MOUNTING HEIGHTS

Unless noted otherwise, install wiring devices vertically aligned at height indicated on construction drawings.

A. RECEPTACLES

Unless indicated otherwise, install vertically with the ground slot mounted at the top.

Where installed horizontally, install with the neutral slot mounted at the top.

Above counter: mount vertically aligned.

Mechanical and electrical equipment rooms and janitors closets: mount vertically aligned.

Garages: mount vertically aligned.

Weatherproof exterior receptacles: horizontally aligned.

GFCI receptacles: Same as general receptacles.

Concrete Block Walls: As long as ADA requirements are maintained, dimensions above may be adjusted slightly as required to compensate for variable joint dimensions such that bottom or top of boxes, as applicable, are at block joints.

B. SWITCHES

General: All switches shall be mounted at the same height throughout the project unless noted otherwise.

Above Counters: Same as for receptacles.

Concrete Block Walls: As long as ADA requirements are maintained, dimensions above may be adjusted slightly as required to compensate for variable joint dimensions, such that bottom or top of boxes, as applicable, are at block joints.

Walls with Wainscoting: 6 inches minimum above wainscoting, but not exceeding 48 inches above finished floor.

C. TELEPHONE/DATA OUTLET BOXES

General: Match mounting height of adjacent wiring device listed above.

Wall-mounted Telephone (Public): One at 48 inches above finished floor and one at 36 inches above finished floor.

For other than wiring devices, refer to paragraphs, articles, sections, divisions, or drawings to obtain mounting heights for specific equipment or systems.

12. WIRING DEVICES

The catalog numbers listed for wiring devices are generally for 20A rated devices. Where 15A rated devices are indicated on the drawings or required for circuit rating limitations, provide wiring devices equivalent to those specified for 20A, but rated for 15A.

All receptacles located outdoors or in damp or wet locations: Listed as 'weather Resistant', designated by a 'WR' on the faceplate.

Minor changes relative to the location of electrical equipment may be made to comply with structural and building requirements as determined in the course of construction. Provide all wiring devices of the same manufacturer and not mixed on the project, to the maximum extent possible. Provide color of toggles and receptacles as requested by the Architect [Engineer]. [Refer to detail showing receptacles table.]

Type of Device	Hubbell	Pass & Seymour	Leviton	Cooper Wiring Devices
Duplex Receptacles - Commercial Grade				
Duplex Receptacle	BR20	CR20	CR20	CR20
Other Receptacles				
GFCI Receptacle	GF20LA	2095	7899-H	VGF20
Blank Face GFCI	GFBF20	2085	7590	VGFD20
Double Duplex	HBL 420	420H	21254	N/A

Floor Boxes: UL 514A listed for scrub water exclusion. For slab on grade - Watertight, Class 1, and fully adjustable cast iron box. For slab above grade - Concrete-tight, fully adjustable, stamped galvanized steel box. Floor box shape, quantity of gangs, type and quantity of devices, finish, and flange type per drawings. Floor box manufacturers: Hubbell, Legrand, Thomas and Betts, or Walker.

Fire-Rated or Pedestal Poke-Thru Devices: NRTL listed and NRTL fire classified with one- to four-hour fire rating as required by floor rating and type. Cover must be UL 514A listed for scrub water exclusion. Poke-Thru shape, quantity of gangs, type, and quantity of devices, finish, and flange type per drawings. Poke-thru device manufacturers: Hubbell or Legrand.

Switch Installations in Door/Side Light Frames: Despard type ivory switch, Pass and Seymour ACD201-i or approved equal.

Switch and Pilot Installations: One Despard type ivory switch and one Despard type flush 1/25 Watt neon pilot light, both installed in a single-gang box with cover plate. Pass and Seymour ACD201-IV switch and 1475 pilot light, or approved equals.

Automatic Load Control Relay (ALCR) (also referred to as emergency shunt relay): UL 924 listed as emergency lighting and power equipment. Connect ALCR in parallel with a lighting control device. Loss of normal power shall cause relay to automatically shunt emergency power to lighting circuit regardless of lighting control device position. Emergency lighting circuit shall continue to operate at full power until normal power has been restored. Provide a two-gang junction box with separation barrier and plaster ring for the ALCR, and install it adjacent to its associated lighting control device or above accessible ceiling. Provide Acuity (Lighting Controls and Design) Model GR2001 ALCR, or equivalent by Bodine, Cooper, Hubbell, Legrand, or Leviton.

13. SWITCH AND OUTLET COVER PLATES

Switch and Outlet Plates: Colored, smooth nylon [Satin stainless steel] [Polished brass] [as directed by Architect]; by the same manufacturer as the wiring devices, wherever possible. Verify desired materials and colors with Architect before installation. Switch plates in unfinished rooms and spaces: Stamped steel, cadmium plated. Install groups of switches under one ganged-plate, usually horizontally; or, where required by details, vertically. Set all cover plates plumb, parallel, and finished flush with the wall.

14. WEATHERPROOF COVER PLATES

Provide GFCI receptacles for designated weatherproof receptacles, unless indicated otherwise on the drawings.

Unattended Exterior, Wet Locations or Other Locations as Indicated: In-use, NEMA 3R, recessed or flush mount, NRTL labeled plates molded from a clear high impact ultraviolet stabilized polycarbonate material for easy verification that cords are plugged in and that the GFCI is functioning. Back box must be suitable for conduit connecting. Coordinate back box with wall depth. Intermatic WP1000RC/HRC or equal.

Attended Wet Or Damp Locations: Weatherproof cover plates NRTL listed for wet locations with cover(s) closed; die-cast aluminum or Type 302 stainless steel; single-cover for switches and vertically mounted receptacles; double-cover for horizontally mounted receptacles; self-closing covers.

Cover Plates: By the same manufacturer as the wiring devices; complying with NFPA 70 ARTICLES 406.9 (A) or (B) requirements for attended or unattended use as applicable.

15. ELECTRICAL SERVICE AND GROUNDING

A. ELECTRICAL SERVICE

See drawings for type, size, voltage, phase, and other requirements.

Provide, or arrange with the serving utility for installation to provide, a recording voltmeter at the service point, on the first day the facility is open for business, for a 24-hour voltage test. If voltage and regulation are not within acceptable limits, arrange with the utility for proper voltage. Submit to the Owner a report of maximum and minimum voltage and a copy of the recording voltmeter chart.

B. CONNECTION TO SERVING UTILITIES

Provide raceways, terminations, metering provisions, and miscellaneous equipment as required for electrical and telephone services for connection by the serving utility, in strict compliance with the requirements of all applicable codes and of the serving utility involved. Verify all service terminations and connection points in the field and work in conjunction with the utility involved in the installation of all services. Provide all materials and equipment required for complete utility connection but not furnished by the serving utility. Notify the utility companies involved within two weeks after notice to proceed of all required information necessary for the utility to supply the project without delay. Pay all charges of the serving utility for the electrical service(s).

C. GROUNDING

Permanently and effectively ground and bond the electrical installation in a thorough and efficient manner, and in conformance, at a minimum, with NFPA 70, or these documents, where they exceed code requirements. Use bare or insulated conductors as specified herein, and other materials indicated on the Drawings.

MODULUS
ARCHITECTS
AND LAND USE
PLANNING
8220 SAN PEDRO DR NE
SUITE 520
ALBUQUERQUE, NEW
MEXICO 87113
PHONE (505) 338-1499
FAX (505) 338-1498

COLORADO LICENSED
THOMAS F. RUEGG
63540
PROFESSIONAL ENGINEER
2/13/2024
23303

PROJECT TITLE

TESLA COLLISION CENTER

6951
S.BLACKHAWK
STREET,
BUILDING 1,
CENTENIAL. CO
80112

PROJECT MANAGER

DRAWN BY:

ISSUE / REVISION

SHEET TITLE

ELECTRICAL SPECIFICATIONS

SCALE:

JOB NO.

SHEET NUMBER

E5.01

100% CDs

THE RESPONSE GROUP, INC.
An Electrical Engineering Corporation
6705 Academy N.E. Suite B
Albuquerque, New Mexico 87109
Phone:(505) 323-7629 Fax:(505) 323-7594
E-mail: theresponsegroup@trg-inc.net

COPYRIGHT 2021 MODULUS ARCHITECTS

16. DISTRIBUTION AND CONTROL EQUIPMENT

A. POWER DISTRIBUTION PANELBOARDS: CIRCUIT BREAKER, 1200A BUS OR SMALLER

Panelboards: Dead-front distribution panelboards with number and sizes of circuit breakers as indicated on the drawings; where installed as service entrance equipment, permanently label as suitable for use as service entrance equipment; fully- rated for the available fault current indicated on the drawings; hinged, lockable front door that covers the circuit breaker handles. Circuit breakers: Quick-make, quick-break, indicating type; engraved nameplates for circuit identification of each circuit breaker. Provide a typewritten card directory indicating exactly what each circuit breaker controls on the inside face of the door for circuit identification.

Manufacturers: Square D Type I-Line, Eaton type Pow-R-Line 4, G.E. types CCB or AV-1, or Siemens types S4 or S5.

B. LIGHTING AND APPLIANCE PANELBOARDS

Panelboards: Complete with bolt-on thermal magnetic, molded case circuit breakers assembled in a dead-front finished cabinet containing a typewritten card directory indicating exactly what each circuit breaker controls; fully- rated and with the integrated short circuit current ratings indicated on the drawings. Plug-in type breakers will not be acceptable. All two- and three-pole breakers: Common trip type.

18. Type SWD Circuit Breakers: Use when breaker serves as a switch for 120V or 277V lighting circuits.

19. GFCI Circuit Breakers: Single- and two-pole configurations with Class A ground-fault protection (6-mA trip). Use as indicated on drawings.

20. Ground-Fault Equipment Protection (GFEP) Circuit Breakers: Class B ground-fault protection (30-mA trip). Use as indicated on drawings.

21. Handle Clamp: Loose attachment for holding circuit breaker handle in "on" position. Use for all circuits containing emergency lighting loads, fire alarm loads, and as indicated on drawings. Breakers serving fire alarm loads must have a permanently-affixed red label stating "FA" in white letters adjacent to the circuit breaker.

22. Handle padlocking device: fixed attachment for locking circuit breaker handle in "on" or "off" position. Use as indicated on drawings.

Manufacturers: Square D Type NQOD or NF (as applicable, based on voltage and ampere ratings and required short-circuit interrupting ratings as scheduled on the drawings) or approved equal by Eaton, G.E., or Siemens.

D. DISCONNECT (SAFETY) SWITCHES

Disconnect (Safety) Switches: Heavy-duty, fused or non-fused (as indicated on drawings or required) NEMA KS1, externally operated, visible-blade safety switches; NEMA enclosure type indicated on the drawings or suitable for the environment in which installed. based on fusible switch and fuse sizes indicated, include Class R, J, or L fuse provisions as applicable.

Where indicated, provide fusible switches permanently labeled as suitable for use as service entrance equipment, with integral and separate neutral and ground assemblies, suitable for the sizes of conductors indicated. Do not double-lug any terminations not specifically listed as suitable for more than one conductor.

Provide switches where not furnished with the starting equipment, at all other points required by NFPA 70, and where indicated on the drawings.

Manufacturers: Eaton, G.E., Siemens, or Square D.

Where indicated, provide shunt-trip disconnect switch, Bussmann power module switch or approved equal, with a fire protection interface relay and auxiliary contacts.

E. FUSES

Provide each circuit and set of fuse clips throughout the work with sizes and types as required or indicated. All fuses larger than 600A: UL Class L, similar to type KRP-C Bussmann Low Peak or equal. Fuses used to protect motors: UL Class RK5, Bussmann Fusetron or equal. Fuses used to protect all other electrical equipment: UL Class RK1, dual element, Bussmann LPS/LPN or equal. All fused devices shall be labeled as to type and size of fuse required.

Furnish three spare fuses of each size and type used on the project (except for main switch fuses, furnish one spare), neatly contained in a properly labeled cabinet.

Manufacturers: Bussmann, Edison Fuse, Mersen/Ferraz Shawmut, or Littlefuse.

F.DRY-TYPE TRANSFORMERS

Transformers: General purpose, NRTL listed/labeled. Comply with NEMA ST 20 and UL 1561.

Insulation Class: For three-phase transformers less than 15 kVA and all single-phase, 185 degrees C, NRTL-component-recognized insulation system with a maximum of 115 degree C rise above a 40 degree C ambient temperature; for three-phase transformers 15 kVA and larger, 220 degrees C, NRTL-component-recognized insulation system with a maximum of 150 degree C rise above a 40 degree C ambient temperature. NRTL-component-recognized insulation system replaces the UL 1446 insulation rating system that used letters.

Phases, Voltages, and Sizes: As indicated on the drawings.

Sound Level: Not exceeding 3 dBa less than NEMA ST 20 standards for the sizes indicated when factory tested according to IEEE C57.12.91.

Full-Capacity Primary Taps: For three-phase below 25 kVA and all single-phase, one 5 percent tap above and one 5 percent tap below; 25 kVA to 500 kVA, six 2.5 percent taps (2 above, 4 below); above 500 kVA, four 2.5 percent (2 above, 2 below).

Transformer Core and Coil Assemblies: Mounted on integral vibration-absorbing pads.

Transformers 75 kVA and larger shall be floor mounted unless indicated otherwise. Transformers 45 kVA and smaller may be wall mounted where wall construction is suitable for the load. Floor mounted transformers shall be securely bolted to a housekeeping pad with vibration isolation pads. Wall mounted or suspended transformers shall have a means of isolating vibration from the support. Wall mounts must be by same manufacturer as and provided with transformer.

Transformers up through 1000 kVA shall be mounted on elastomeric vibration isolation pads. Pad shall be constructed of neoprene, rubber, glass fiber, or a combination thereof. Pads shall be "ribbed" or "waffled" in texture. Pads shall be selected for smallest durometer (hardness), preferably less than 50. Deflection of pad shall be 0.25 inches static minimum. Stack pads until the desired deflection is achieved.

Make final conduit connections to transformers with flexible conduit, with at least 6 inches of slack in all directions. Minimum flexible conduit length shall be 2 feet.

Transformer Enclosures: Removable front cover, core and coil encapsulated within resin compound, drip-proof, fabricated of heavy gauge sheet steel construction. Dry locations: Totally enclosed, ventilated, NEMA 250 Type 2. Damp or wet locations: Totally enclosed, ventilated with weather shields, NEMA 250 Type 3R. Corrosive locations: Totally enclosed, non-ventilated, NEMA 250 Type 4X, stainless steel.

Provide energy-efficient transformers complying with federal regulation 10 CFR 431.192 thru 431.196 requirements.

K-rated transformers shall be provided as indicated on the drawings and be listed for 115 degree C rise.

Manufacturers: ACME, Eaton, G.E., Siemens, Hammond, Sola/Hevi-Duty, or Square D.

G. FRACTIONAL HORSEPOWER MANUAL CONTROLLER

Manual motor starters for fractional horsepower single-phase motors shall consist of a manually operated toggle switch equipped with melting alloy type overload relay. Thermal unit shall be of one piece construction and interchangeable. Starter shall be inoperative if thermal unit is removed. Provide flush mounted units in finished areas and surface mounted units in unfinished areas. Starters shall have NEMA I general purpose enclosure, unless otherwise indicated, and be rated for the motor horsepower required. Provide with handle guard with locking provisions and an integral pilot light.

Manufacturers: Square D Class 2510 Type F, Eaton 9101 series, G.E. CR101 series, Siemens MSF series, or Westinghouse MST series.

H. INTEGRAL HORSEPOWER MANUAL CONTROLLER

Manual motor starters shall consist of a manually operated switch equipped with melting alloy type thermal overload relays. Thermal unit shall be of one piece construction and interchangeable. Starter shall be inoperative if thermal unit is removed. Provide flush mounted units in finished areas and surface mounted units in unfinished areas. Starters shall have NEMA I general purpose enclosure, unless otherwise indicated, and be rated for the motor horsepower required. Provide with handle guard with locking provisions and an integral pilot light.

Manufacturers: Square D Class 2510 Type M, Eaton 9115 or A302 series, G.E. CR1062 series, Siemens MS series, or Westinghouse MST series.

I. MOTOR STARTING SWITCHES

Motor starting switches shall consist of a toggle operated two- or three-pole switch. Contacts shall be double break silver alloy, visible from both sides of the switch, and shall have a direct linkage to the operator for positive break. Provide flush mounted units in finished areas and surface mounted units in unfinished areas. Starters shall have NEMA I general purpose enclosure, unless otherwise indicated, and be rated for the motor horsepower required. Provide handle guard with locking provisions.

Manufacturers: Square D Class 2510 Type K, Eaton 9115 series, G.E. TC2000 series, Siemens MS series, or Westinghouse MST series.

17. LIGHT FIXTURES, LAMPS AND BALLASTS

A. LIGHT FIXTURE LOCATIONS

Light fixtures shown on the drawings represent general arrangements only. Refer to architectural drawings for more exact locations. Coordinate location with all other trades before installation to avoid conflicts. Coordinate light fixture locations in mechanical rooms with final installed piping and ductwork layouts.

B. LIGHT FIXTURES

Provide light fixtures as scheduled on drawings, including all lamps, all necessary accessories, material and labor to securely hang, clean, and make light fixtures completely ready for use. Light fixture model numbers scheduled on the drawings show only the manufacturer, grade, and style of light fixtures required. Provide all hangers, supports, and miscellaneous hardware required to install light fixtures, proper trim to fit each ceiling condition actually encountered, and additional tie wires connected to structure to conform to seismic requirements where required by the applicable building code.

Packaging of light fixtures will not be allowed. Only those luminaires listed in the Light Fixture Schedule or approved in accordance with substitutions of these specifications will be accepted. Where the Light Fixture Schedule indicates an allowance for a specific light fixture, the price is a Contractor price. Include all additional costs for freight, lamps, and installation of light fixture and lamps.

Through-wiring of recessed light fixtures in suspended ceilings is not permitted. Connect each light fixture by a whip to a junction box. Provide cable whips of sufficient lengths to allow for relocating each light fixture within a 5-foot radius of its installed location, but not exceeding 6 feet in unsupported lengths.

C. EMERGENCY LIGHTING UNITS AND EXIT SIGNS

Description: Self-contained units complying with UL 924.

Battery: Sealed, maintenance-free, lead-acid type. The batteries shall be of suitable rating and capacity to supply and maintain at not less than 87-1/2 percent of the nominal battery voltage for the total lamp load associated with the unit for a period of at least 1-1/2 hours, or the unit equipment shall supply and maintain not less than 60 percent of the initial emergency illumination for a period of at least 1-1/2 hours.

Charger: Fully automatic, solid-state type with sealed transfer relay.

Operation: Relay automatically turns lamp on when power supply circuit voltage drops to 80 percent of nominal voltage or below. Lamp automatically disconnects from battery when voltage approaches deep-discharge level. When normal voltage is restored, relay disconnects lamps from battery, and battery is automatically recharged and floated on charger.

Test Push Button: Push-to-test type, in unit housing, simulates loss of normal power, and demonstrates unit operability.

LED Indicator Light: Indicates normal power on. Normal glow indicates trickle charge, and bright glow indicates charging at end of discharge cycle.

Wire Guard: Heavy-chrome-plated wire guard protects lamp heads or fixtures.

Remote Test: Switch in hand-held remote device aimed in direction of tested unit initiates coded infrared signal. Signal reception by factory-installed infrared receiver in tested unit triggers simulation of loss of its normal power supply, providing visual confirmation of either proper or failed emergency response.

Integral Self-Test: Factory-installed electronic device automatically initiates code-required test of unit emergency operation at required intervals. Test failure is annunciated by an integral audible alarm and flashing red LED.

D. LAMPS

Refer to owners specifications and light fixture schedule for all lamp requirements.

Provide lamps and color temperatures as indicated on the drawings for all light fixtures; or, if not indicated, per the Architect and/or lighting designer. Lamps shall be by the same manufacturer for color consistency. Lamps shall be compatible with the specified light fixture. Fluorescent, metal halide, and incandescent lamp manufacturers: Eiko, G.E., Osram/Sylvania, Philips, Soraa, or Venture.

LED Lamps and Luminaires: Comply with ANSI C78.377 for white light LED color range; minimum CRI of 80 unless noted otherwise; LED binning specification tolerance to be within 3 macadam ellipses of rated values; all LEDs used for same fixture type throughout the project must originate from the same production bin; minimum average rated life of 20,000 hours for LED lamps and 50,000 hours for LED luminaires; Rohs compliant. LED lamp manufacturers: Bridgelux, Cree, Nichia, Osram, or Xicato.

E. BALLASTS

LED Drivers: Comply with NRTL requirements and ANSI C82.77; designed for type and quantity of lamps served; sound levels not exceeding Class A ambient noise levels; lamp current crest factor of 1.5 or less; 90-percent power factor or greater; line transient withstand ratings as defined in ANSI/IEEE C62.41, Category A.; total harmonic distortion less than 20 percent; shall tolerate sustained open circuit and short circuit output conditions without damage; shall not over-drive LEDs at a current or voltage above LED rated values; ROHS compliant; meets EN610000 requirements for input harmonics.

F. DIMMABLE LIGHT FIXTURES

For dimmable light fixtures provide both control and power wiring between light fixture and control device and between light fixtures. Quantity of low voltage and line voltage wiring and wire type shall be per manufacturer's recommendations. Coordinate light fixture and control device dimming types for compatibility.

18. MISCELLANEOUS ELECTRICAL

A. WIRING OF MECHANICAL EQUIPMENT

Provide all raceways and power wiring for all Division 23 equipment requiring electrical connections, including but not limited to pumps, water heaters, and HVAC equipment, and all line-voltage control and interlock wiring not provided under Division 23. Connect per manufacturers' wiring diagrams. Coordinate with Division 23 for disconnects and variable frequency drives (VFD) furnished with equipment, and provide all disconnect switches and final connections as required. If VFD is separate or does not have an integral disconnect feature, provide disconnect switch with auxiliary contact such that motor will be turned off if switch is off. provide VFD cable, Belden or approved equivalent, for connection of VFD to motor when required. After installing wiring, verify that each motor load has the correct phase rotation.

Verify the actual "Maximum Overcurrent Protection" (MOCP) device ratings and "Minimum Circuit Ampacity" (MCA) conductor sizing for mechanical equipment from the equipment nameplate. Base electrical installations on actual required amperages, which may vary somewhat from the conductor and equipment sizes shown on the drawings; however, in no case, reduce the size of conductors indicated on the drawings without authorization from the Engineer. Provide properly sized electrical wiring and equipment without extra cost to the Owner. Notify the Engineer of all changes required in the electrical installation due to equipment variances so that the effects on feeders, branch circuits, panelboards, fuses and circuit breakers can be checked prior to purchasing and installation. Be responsible for coordinating with Division 23 to verify the actual ampacities and correct sizes of all conductors and overcurrent protective devices for all equipment, and correct overload heaters for all motors, when starters are provided under Division 26.

B. WIRING OF THERMOSTATS, TIME AND TEMPERATURE CONTROLS

Provide all raceways, power wiring, and line-voltage control and interlock wiring not provided under Division 23, for all thermostats, temperature control devices, and controls, including, but not limited to, night-stats, water heater interlocks, time switches and override timers. See mechanical drawings for locations and temperature control diagrams. Low-voltage conductors for thermostats and temperature control system may be run exposed above finished accessible ceilings, if approved and listed for this purpose, but shall be installed in conduit within walls and where exposed in the work areas.

C. TELEPHONE SYSTEM PROVISIONS

Provide incoming telephone service raceways as indicated on drawings or as required by the serving telephone company. Provide 3/4-inch thick plywood board, fire-retardant-treated and stamped FRT, securely anchored to the wall, at the location and of the size as indicated on the drawings. Provide flush mounted telephone outlet boxes with 1 inch conduit stub-up with pull-string concealed to accessible ceiling space at locations as indicated on the drawings.

D. DATA SYSTEM PROVISIONS

Provide flush mounted data outlet boxes with 1 inch conduit stub-up with pull-string concealed to accessible ceiling space at locations as indicated on the drawings.

E. MISCELLANEOUS EQUIPMENT AND CONNECTIONS

All raceways, wiring, and connections of devices to energy management system that are not the responsibility of Division 23.

All wiring and connections of exit door alarms.

END OF SECTION 26

THE RESPONSE GROUP, INC.
An Electrical Engineering Corporation
6705 Academy N.E. Suite B
Albuquerque, New Mexico 87109
Phone:(505) 323-7629 Fax:(505) 323-7594
E-mail: theresponsegroup@trg-inc.net

100% CDs

MODULUS
ARCHITECTS
AND LAND USE
PLANNING
8220 SAN PEDRO DR NE
SUITE 520
ALBUQUERQUE, NEW
MEXICO 87113
PHONE (505) 338-1499
FAX (505) 338-1498

COLORADO LICENSED
THOMAS F. RUEGG
63540
PROFESSIONAL ENGINEER
2/13/2024
23303

PROJECT TITLE

TESLA COLLISION CENTER

6951
S.BLACKHAWK
STREET,
BUILDING 1,
CENTENIAL. CO
80112

PROJECT MANAGER

DRAWN BY:

ISSUE / REVISION

SHEET TITLE

ELECTRICAL SPECIFICATIONS

SCALE:

JOB NO.

SHEET NUMBER

E5.02

COPYRIGHT 2021 MODULUS ARCHITECTS

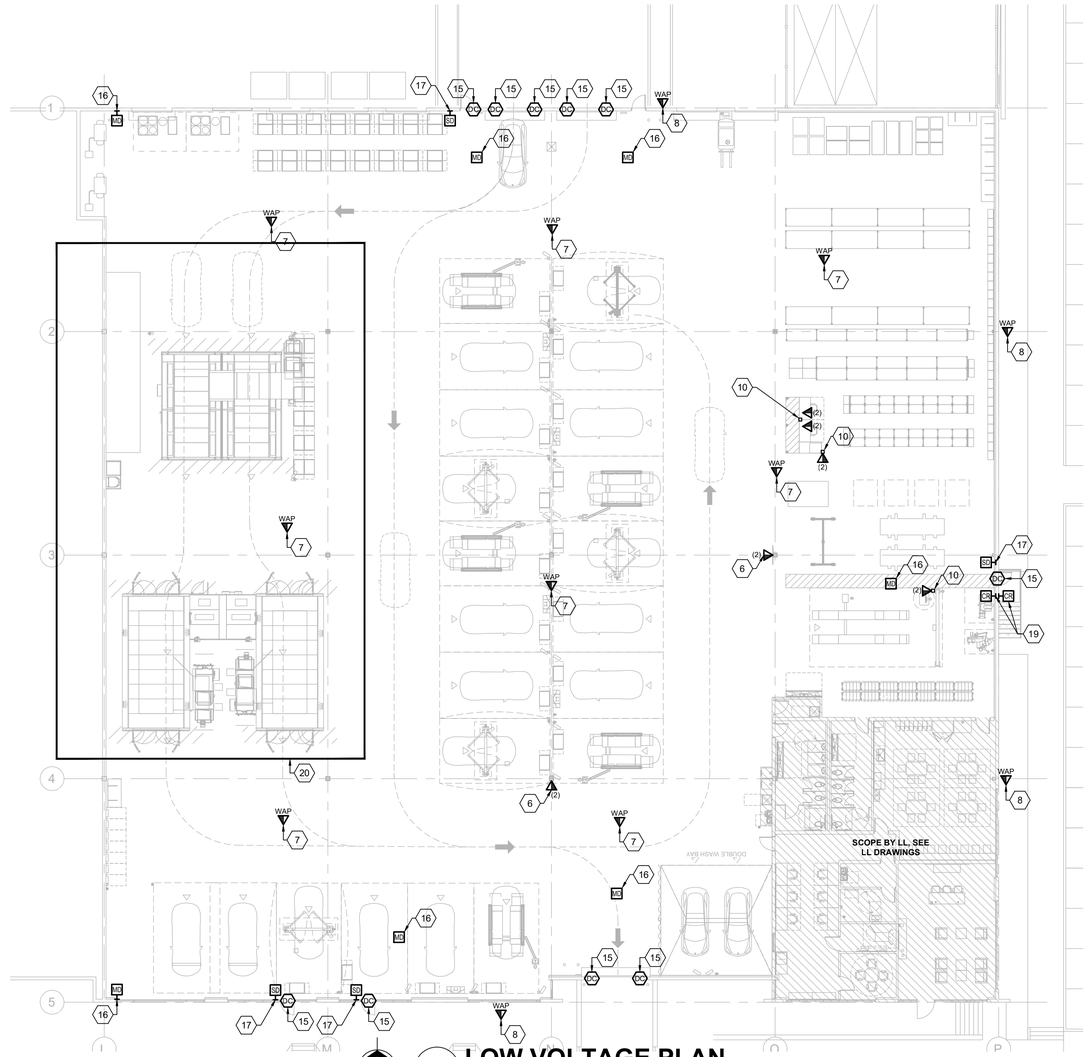

1 LOW VOLTAGE PLAN

SCALE: **1/16" = 1'-0"**

GENERAL NOTES

A. REFER TO E0.01 FOR ADDITIONAL GENERAL NOTES.

B. ALL CONDUIT FOR LOW VOLTAGE CABLING SHALL BE EMT - NO FLEX CONDUIT.

C. CONTRACTOR TO PROVIDE ALL RACEWAYS, JUNCTION BOXES AND CABLING (SIZED FOR DATA OUTLET/DATA WIRING TO BE INSTALLED)). ALL COMMUNICATION OUTLETS SHALL HAVE A 1" CONDUIT STUB UP (MINIMUM) TO ACCESSIBLE CEILING SPACE (OR EXTENDED TIGHT TO STRUCTURE IN SHOP AREAS, UNLESS DIRECTED OTHERWISE) FOR DATA WIRING . PROVIDE INSULATED BUSHING AT EACH CONDUIT END. VERIFY EXACT LOCATION WITH TESLA PROJECT MANAGER PRIOR TO INSTALLATION. ROUTE CONDUITS FOR CABLES INTO I.T. SPACE, WHEN DIRECTED. COORDINATE INSTALLATION WITH TESLA'S CONSTRUCTION MANAGER.

D. COORDINATE DATA RECEPTACLE PLACEMENT AND REQUIREMENTS WITH TESLA'S LOW VOLTAGE INSTALLERS PRIOR TO ROUGH-INS.

E. ALL UNDERGROUND CONDUITS SHALL BE INSTALLED IN ACCORDANCE WITH N.E.C. 300.5.

F. ALL DATA CABLE SHALL BE CAT6 CMP RATED CABLE.

G. ALL DATA CABLING SHALL BE WHITE CAT6 EXCEPT IN OPEN BLACK CEILING AREAS, THEN CAT6 BLACK CABLE SHALL BE USED.

H. ALL DATA CABLE EXCEEDING 300 FEET IN LENGTH MUST BE RUN USING POWERWISE CABLE.

I. INSTALL AND LABEL ALL CABLE RUNS FROM END POINT BACK TO IT ROOMS.

J. MARK CABLES WITH THEIR RESPECTIVE LABEL LOCATIONS FROM THE FLOOR PLAN.

K. LOCATE MPOE AND INSTALL 3 CAT6 CMP BACKBONE CABLES FROM MPOE TO IT ROOM AND EACH END WILL HAVE 10 FEED OF SERVICE LOOP.

L. LEAVE 15 FEET OF SERVICE LOOP ON THE AP END FOR EACH WIRELESS ACCESS POINT.

M. LEAVE 3 FEET OF SERVICE LOOP AT EACH DATA JACK END POINT.

N. LEAVE 15 FEET OF SERVICE LOOP ON THE IT ROOM END OF EVERY CABLE RUN, LABELED TO MATCH END POINT.

KEYED NOTES

1. PROVIDE AND INSTALL ALL RACEWAYS, JUNCTION BOXES AND CABLING FOR DATA RECEPTACLE, MOUNTED AT OR NEAR ALIGNMENT RACK CONSOLE. COORDINATE FINAL LOCATION, CONDUIT ROUTING, AND ADDITIONAL REQUIREMENTS WITH TESLA'S CONSTRUCTION MANAGER/LOW VOLTAGE INSTALLERS. SEE ELECTRICAL POWER SHEETS, E3.XX SERIES FOR ASSOCIATED POWER REQUIREMENTS. COORDINATE DATA AND POWER RECEPTACLE MOUNTING LOCATIONS IN FIELD. (NOTE: PROVIDE CORD COVERS TO PROTECT DATA WIRING ROUTING, WHEN DATA OUTLET MOUNTED AWAY FROM EQUIPMENT.)

2. ELECTRICAL MOUNTING POST (UNISTRUT OR APPROVED EQUAL). COORDINATE FINAL PLACEMENT OF ELECTRICAL MOUNTING POST WITH TESLA CONSTRUCTION MANAGER, IN FELID, PRIOR TO INSTALLATION. CONTRACTOR TO INSTALL DATA DEVICES SHOWN/NOTED AT EACH ELECTRICAL MOUNTING POST LOCATION. SEE "TYPICAL ELECTRICAL MOUNTING POST - ELECTRICAL LAYOUT DETAILS", SHEET E3.04, FOR EXAMPLES OF ELECTRICAL DEVICE PLACEMENT AND ADDITIONAL REQUIREMENTS. WHEN APPLICABLE, REFER LISTED KEYED NOTES FOR ADDITIONAL MOUNTING AND DEVICE REQUIREMENTS. ROUTE CONDUIT(S) FROM CEILING/JOIST SPACE ABOVE. PROVIDE CODE COMPLIANT BRACING/MOUNTING HARDWARE FOR ELECTRICAL MOUNTING POST, DEVICES AND CONDUITS BEING INSTALLED. REFER TO ARCHITECTURAL AND STRUCTURAL PLANS FOR ADDITIONAL REQUIREMENTS.

3. CONTRACTOR FIELD VERIFY EXACT MOUNTING LOCATIONS OF ALL DESK, POWER AND DATA RECEPTACLES (REFER TO ELECTRICAL POWER PLANS, E3.XX SERIES SHEETS FOR POWER RECEPTACLE REQUIREMENTS). (NOTE: POWER AND DATA WIRING SHALL BE ROUTED IN SEPARATE CONDUITS FROM CEILING/JOIST SPACE ABOVE). COORDINATE EXACT MOUNTING HEIGHT(S) OF OUTLETS WITH TESLA CONSTRUCTION MANAGER (NOTE: POWER OR DATA OUTLET SHALL MOUNTED/RACKED AT 44" A.F.F. UNLESS DIRECTED OTHERWISE.) PROVIDE ALL NECESSARY DEVICES/BRACING FOR A COMPLETE AND CODE COMPLIANT INSTALLATION.

4. CAMERA : AXIS 3301 IP CAMERA MOUNTED TO WALL. PRIMARY FOCUS: NIGHT DROP BOX OR DRIVE-IN ENTRY. CAT5 WIRE - HIDE & RUN TO ELECTRICAL CLOSET & FIND PLACE TO HIDE [15]' SERVICE LOOP AT EITHER END. TEST THE CAMERA & INTEGRITY OF THE CABLE BY PLUGGING THE CAMERA INTO THE TECHNICIAN'S LAPTOP & USING THE AXIS SOFTWARE NO HEAD END. TERMINATE CABLE WITH RJ-45 JACK & PLUG INTO THE PATCH PANEL. COORDINATE WITH OWNER'S PM. REFER TO SECURITY DRAWINGS FOR ADDITIONAL REQUIREMENTS AND INFORMATION.

5. NOT USED.

6. PROVIDE AND INSTALL ALL RACEWAYS, JUNCTION BOXES AND CABLING FOR DATA RECEPTACLE AT SHOP MONITOR. CONFIRM MOUNTING HEIGHT OF MONITOR AND DATA RECEPTACLE WITH ARCHITECTURAL DETAILS. WHEN MONITOR IS SUSPENDED FROM STRUCTURE, PROVIDE FLEXIBLE CONDUIT FROM JUNCTION BOX AT CEILING STRUCTURE, TO SURFACE MOUNTED RECEPTACLES BEHIND MONITOR. PROVIDE ALL NECESSARY BRACING.) SEE ELECTRICAL POWER SHEETS, E3.XX SERIES FOR ASSOCIATED POWER REQUIREMENTS. COORDINATE DATA AND POWER RECEPTACLE MOUNTING LOCATIONS IN FIELD.

7. CEILING MOUNTED DATA OUTLET FOR WIRELESS ACCESS POINT. COORDINATE EXACT LOCATION WITH TESLA PROJECT MANAGER PRIOR TO ROUGH-IN.

8. EXTERIOR WIRELESS ACCESS POINT FOR POWER SHARING COMMUNICATIONS BETWEEN PEDESTAL CHARGERS.COORDINATE EXACT LOCATION WITH TESLA PROJECT MANAGER PRIOR TO ROUGH-IN.

9. NOT USED.

10. SECURITY ACCESS DOOR WITH ELECTRIFIED DOOR LOCK AND CARD/BADGE READER(S). CONTRACTOR TO PROVIDE A MINIMUM OF (1) JUNCTION BOX (4" SQUARE. 2-1/8"D, WITH SINGLE GANG RING) FOR SECURITY ACCESS CARD/BADGE READER AND (1) DOOR FRAME, (FLUSH MOUNTED) JUNCTION BOX (2-1/8"D) FOR LOW VOLTAGE WIRING TO ELECTRIFIED DOOR LOCK (AT DOOR HANDLE). VERIFY EXACT MOUNTING LOCATION OF DOOR FRAME MOUNTED JUNCTION BOX IN FIELD. DOOR FRAME JUNCTION BOX SHALL BE INSTALLED NEXT TO ELECTRIFIED DOOR HINGE (OR ELECTRIFIED DOOR FRAME PIVOT. REFER TO ARCHITECTURAL DOOR HARDWARE , SHEET A9.02, FOR ADDITIONAL INFORMATION/REQUIREMENTS.) CONTRACTOR TO PROVIDE EMPTY CONDUIT WITH PULL STRING TO EACH JUNCTION BOX LOCATION, FROM SPACE ABOVE ACCESSIBLE CEILING, ABOVE/NEAR SECURITY ACCESS DOOR. REFER TO SECURITY ACCESS DOOR DETAILS, SHEET E3.03. FOR ADDITIONAL INFORMATION. COORDINATE INSTALLATION WITH TESLA'S LOW VOLTAGE AND SECURITY SYSTEM INSTALLERS, PRIOR TO ROUGH-IN. FIELD VERIFY ADDITIONAL HARDWARE/DEVICES BEING INSTALLED AT EACH SECURITY ACCESS DOOR. PROVIDE ADDITIONAL JUNCTION BOXES AND DEVICES AS REQUIRED FOR A FULL AND COMPLETE INSTALLATION. (NOTE: CONNECTION TO ELECTRIFIED DOOR LOCK REQUIRES LOW VOLTAGE CONNECTION AT HANDLE IN DOOR. FACTORY DOOR BORING REQUIRED (UNLESS HOLLOW METAL DOOR) TO ROUTE LOW VOLTAGE WIRING FROM CONNECTION AT DOOR LOCK TO ELECTRIFIED DOOR HINGE OR PIVOT AND DOOR FRAME MOUNTED JUNCTION BOX.) (NOTE: SEE SHEET E3.00A ADDITIONAL SECURITY ACCESS DOOR EQUIPMENT LOCATIONS AND REQUIREMENTS.)

11. EMPLOYEE ACCESS DOOR. PROVIDE INTERIOR AND EXTERIOR CARD/BADGE READERS AT THIS DOOR LOCATION. COORDINATE ADDITIONAL DEVICE/ROUGH-IN REQUIREMENTS WITH TESLA'S SECURITY CONTRACTOR PRIOR TO START OF WORK.

12. CONTRACTOR TO VERIFY ALL DATA/LOW VOLTAGE REQUIREMENTS WITH OVERHEAD DOOR INSTALLER/EQUIPMENT BEING INSTALLED. VERIFY LOCATIONS OF ALL DOOR SENSORS (SAFETY AND AUTOMATIC OPENING (WHEN APPLICABLE)). UP/DOWN CONTROLLER FOR OVERHEAD DOOR SHALL BE MOUNTED AT 48" A.F.F , TO THE TOP OF THE BOX. CONTRACTOR TO PROVIDE REQUIRED CONTROL WIRING TO DOOR SENSORS AND UP/DOWN CONTROLLER (PUSH BUTTON CONTROL STATION) IN 1/2"C (UNLESS DIRECTED OTHERWISE). SEE MANUFACTURER'S CONTROL DIAGRAM & WIRING INSTRUCTIONS. PROVIDE ALL NECESSARY JUNCTION BOX(ES), CONDUITS, & LOW VOLTAGE/CONTROL WIRING, REQUIRED FOR A FULLY FUNCTIONING AND COMPLETE INSTALLATION. SEE POWER PLANS, E3.XX SERIES SHEETS, FOR ADDITIONAL INFORMATION/REQUIREMENTS.

13. CONTRACTOR TO COORDINATE THE EXACT MOUNTING LOCATION OF OVERHEAD DOOR, AUTOMATIC OPENER SENSOR (FALCON SENSORS OR TESLA P.M. APPROVED EQUAL). SEE MANUFACTURER'S CONTROL DIAGRAM & WIRING INSTRUCTIONS. CONTRACTOR TO VERIFY ALL DATA/LOW VOLTAGE REQUIREMENTS WITH OVERHEAD DOOR INSTALLER/EQUIPMENT BEING INSTALLED. CONTRACTOR TO PROVIDE W.P. JUNCTION BOX AND ALL NECESSARY CONDUIT(S)/LOW VOLTAGE/CONTROL WIRING, FROM EXTERIOR SENSOR TO INTERIOR DEVICES (VERIFY ROUTING IN FIELD). COORDINATE PROGRAMING/SCHEDULING/TIME SETTING REQUIREMENTS, WITH TESLA'S CONSTRUCTION MANAGER, TO DISABLE AUTOMATIC OPENER AFTER NORMAL BUSINESS HOURS (VERIFY WITH EQUIPMENT INSTALLED).

14. CONTRACTOR TO VERIFY THE LOW VOLTAGE REQUIREMENTS FOR THE RECEIVING DOOR, DOORBELL SYSTEM. PROVIDE CONDUITS (WITH PULL STRINGS) FROM THE LOW VOLTAGE TRANSFORMER TO THE EXTERIOR DOORBELL UNIT AND THE INTERIOR CHIME/BELL. VERIFY EXACT MOUNTING LOCATIONS OF ALL EQUIPMENT INSTALLED WITH TESLA CONSTRUCTION MANAGER PRIOR TO START OF WORK. (NOTE: THE CHIME/BELL SHALL BE LOCATED NEAR THE PARTS DESK OR OTHER TESLA APPROVED LOCATION WHERE EMPLOYEES WILL BE COMMONLY LOCATED.) COORDINATE REQUIREMENTS OF LOW VOLTAGE WIRING WITH TESLA CONSTRUCTION MANAGER/LOW VOLTAGE CONTRACTOR. SEE SHEET E3.00 FOR POWER REQUIREMENTS/CIRCUIT INFORMATION. VERIFY ADDITIONAL REQUIREMENTS WITH EQUIPMENT BEING INSTALLED. PROVIDE ALL NECESSARY AND MAKE ALL FINAL CONNECTIONS.

15. NEW LOCATION OF DOOR CONTACT. REFER TO SECURITY DRAWINGS FOR ALL REQUIREMENTS AND ADDITIONAL INFORMATION.

16. NEW LOCATION OF MOTION DETECTOR. REFER TO SECURITY DRAWINGS FOR ALL REQUIREMENTS AND ADDITIONAL INFORMATION.

17. NEW LOCATION OF LOCAL AUDIBLE ALARM. REFER TO SECURITY DRAWINGS FOR ALL REQUIREMENTS AND ADDITIONAL INFORMATION.

18. EMPLOYEE TIMECLOCK LOCATION. PROVIDE AND INSTALL ALL RACEWAYS, JUNCTION BOXES AND CABLING FOR DATA RECEPTACLE. COORDINATE FINAL LOCATION , CONDUIT ROUTING, AND ADDITIONAL REQUIREMENTS WITH TESLA'S CONSTRUCTION MANAGER/LOW VOLTAGE INSTALLERS.

19. NEW LOCATION OF CARD READER. REFER TO SECURITY DRAWINGS FOR ALL REQUIREMENTS AND ADDITIONAL INFORMATION.

20. REFER TO "ENLARGED LOW VOLTAGE PLAN - PAINT BOOTH" ON SHEET E6.01 FOR ADDITIONAL INFORMATION WITHIN THIS AREA

MODULUS ARCHITECTS AND LAND USE PLANNING
8220 SAN PEDRO DR NE
SUITE 520
ALBUQUERQUE, NEW MEXICO 87113
PHONE (505) 338-1499
FAX (505) 338-1498

COLORADO LICENSED
THOMAS F. RUEHLE
63540
PROFESSIONAL ENGINEER
2/13/2024
23303

THE RESPONSE GROUP, INC.
An Electrical Engineering Corporation
6705 Academy N.E. Suite B
Albuquerque, New Mexico 87109
Phone:(505) 323-7629 Fax:(505) 323-7594
E-mail: theresponsegroup@trg-inc.net

100% CDs

PROJECT TITLE

TESLA COLLISION CENTER

6951
S.BLACKHAWK
STREET,
BUILDING 1,
CENTENIAL. CO
80112

PROJECT MANAGER

DRAWN BY:

ISSUE / REVISION

SHEET TITLE

LOW VOLTAGE PLAN

SCALE:

JOB NO.

SHEET NUMBER

E6.00

COPYRIGHT 2021 MODULUS ARCHITECTS

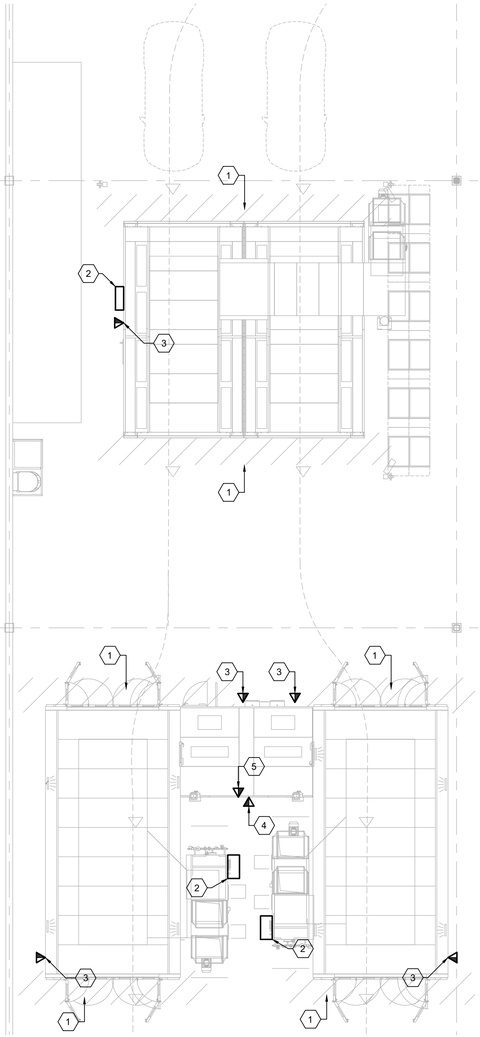

1 ENLARGED LOW VOLTAGE PLAN - PAINT BOOTH

SCALE: **1/8" = 1'-0"**

GENERAL NOTES

A. REFER TO SHEET E0.01, E3.00A & E6.00 FOR ADDITIONAL GENERAL NOTES.

B. REFER TO SHEET E3.00A FOR PAINT BOOTH POWER REQUIREMENTS AND ADDITIONAL INFORMATION.

C. IF THE PAINT BOOTHS/PREP BOOTH ARE CLASSIFIED AS A HAZARDOUS ELECTRICAL LOCATIONS PER TESLA INFORMATION - CLASS 1, DIV1. ALL WORK IN THE PAINT BOOTHS, PREP BOOTH SHALL BE PER CODE REQUIREMENTS FOR THAT HAZARDOUS RATING.

D. IF THE THE MIXING ROOM/AREAS 3' OUTSIDE BOOTH/MIXING ROOM DOORS OR OPENINGS, ARE CLASSIFIED AS A HAZARDOUS ELECTRICAL LOCATION PER TESLA INFORMATION - CLASS 1, DIV 2. ALL WORK IN MIXING ROOM,PAINT BOOTHS, PREP BOOTH SHALL BE PER CODE REQUIREMENTS FOR THAT HAZARDOUS RATING.

E. INSIDE MIX ROOM: (TYPICAL) INSTALL QTY 2 (TWO), 120V, 20A, 1PH. CIRCUIT, CLASS 1 DIVISION 2 EXPLOSION PROOF DROPS, TO POWER PAINT MIX BANK & PAINT SHAKER. QTY 1 (ONE) OF THESE TO BE HARDWIRED (JUNCTION BOX) FOR THE PAINT MIX BANK & WITH QTY 1 (ONE) RECEPTACLE FOR PAINT SHAKER. TYPICALLY 24" AFF. VERIFY EXACT MOUNTING LOCATION IN FIELD PRIOR TO INSTALLATION.

F. WIRING, EQUIPMENT & LIGHTING LOCATED WITHIN AND DIRECTLY OUTSIDE CLASS 1, DIVISION1 AREAS OR CLASS 1. DIVISION 2 AREAS (AND OTHER APPLICABLE CLASSIFIED AREAS, SPECIFIED IN ARTICLE 516) SHALL CONFIRM TO APPLICABLE PROVISIONS OF ARTICLES 501 AND 516 OF THE LATEST LOCALLY ADOPTED VERSION OF ELECTRIC CODE.

G. TYPICAL EXPLOSION PROOF MATERIAL: HUBBELL-KILLARK, FXB-5, EDS - TYPE, MOUNTING BODIES, BOXES. HUBBELL-KILLARK XS1C TUMBLER SWITCH XS COVER W/ 1P 20A 120/277V OR SIMILAR.

H. ALL DATA RECEPTACLES EXTERNAL TO PAINT BOOTH/PREP BOOTH/MIX ROOM SHALL BE INSTALLED GREATER THAN 3' FROM ANY PAINT BOOTH/MIXING ROOM DOOR OR OPENING, TO AVOID CLASSIFIED HAZARDOUS AREAS. ALL DEVICES SHALL BE LISTED FOR THE CLASSIFIED HAZARDOUS AREA, IN WHICH THEY ARE INSTALLED.

I. TWO CAT6 RJ45 DROPS REQUIRED TO EACH PAINT BOOTH/PREP STATION/MIXING ROOM CONTROLLER. LIAISE WITH PAINT BOOTH VENDOR FOR EXACT LOCATION, OR TERMINATE NEARBY IN RJ45 SOCKETS (COORDINATE WITH TESLA P.M. AS NEEDED). (NOTE: (WHEN POSSIBLE) INSTALL ELECTRICAL DEVICES GREATER THAN 3' FROM ANY PAINT BOOTH/PREP BOOTH DOOR OR OPENING, TO AVOID CLASSIFIED HAZARDOUS AREAS. ALL ELECTRICAL DEVICES SHALL BE LISTED FOR THE CLASSIFIED HAZARDOUS AREA, IN WHICH THEY ARE INSTALLED. SEE KEY NOTE #1, FOR ADDITIONAL INFORMATION.)

KEYED NOTES

1. CLASSIFIED HAZARDOUS AREA/APPROXIMATE CLASSIFIED HAZARDOUS AREA BOUNDARY (INSIDE BOOTHS/MIXING ROOM/HATCHED AREAS OUTSIDE BOOTH/MIXING ROOM DOORS OR OPENINGS). REFER TO SHEET E3.01 FOR HAZARDOUS AREA INFORMATION/CLASSIFICATIONS.

2. NEW SPRAY/PREP BOOTH/MIXING ROOM WITH CONTROL PANEL SUPPLIED WITH UNIT AND INSTALLED IN FIELD. PROVIDE ALL CONDUIT, WIRING, AND CONNECTIONS FOR POWER, LIGHTING, AND CONTROLS TO COMPLETE INSTALLATION OF SPRAY BOOTH PER MANUFACTURERS SPECIFICATIONS AND THAT THE UNIT IS FULLY OPERATIONAL. FIELD VERIFY CONNECTION POINTS. VERIFY AND COORDINATE ALL REQUIREMENTS WITH PAINT BOOTH VENDOR AND TESLA REPRESENTATIVE. CONTROL PANELS MUST BE LOCATED OUTSIDE ANY AREA CLASSIFIED AS A HAZARDOUS ZONE . NO "SPARKING DEVICES" SHALL BE INSTALLED HATCHED AREA SHOWN IN FRONT CONTROL PANEL. SEE SHEET E3.01 FOR ADDITIONAL INFORMATION/REQUIREMENTS FOR CLASSIFIED HAZARDOUS AREAS)

3. CONTRACTOR TO PROVIDE TWO CAT6 OR CAT7 RJ45 DROPS TO EACH PAINT BOOT/PREP BOOTH/MIXING ROOM CONTROLLER. LIAISE WITH PAINT BOOTH VENDOR FOR EXACT LOCATION, OR TERMINATE NEARBY IN RJ45 SOCKETS (COORDINATE WITH TESLA P.M. AS NEEDED). (NOTE: (WHEN POSSIBLE) INSTALL DATA DEVICES GREATER THAN 3' FROM ANY PAINT BOOTH/PREP BOOTH DOOR OR OPENING, TO AVOID CLASSIFIED HAZARDOUS AREAS. ALL DEVICES SHALL BE LISTED FOR THE CLASSIFIED HAZARDOUS AREA, IN WHICH THEY ARE INSTALLED. SEE SHEET E3.01 FOR ADDITIONAL INFORMATION/REQUIREMENTS FOR CLASSIFIED HAZARDOUS AREAS.)

4. CONTRACTOR TO PROVIDE TWO (CAT6 OR CAT7 RJ45) DROPS AND DATA RECEPTACLE MOUNTED AT OR NEAR EXPLOSION PROOF DRYER. COORDINATE FINAL LOCATION, CONDUIT ROUTING, AND EXACT REQUIREMENTS WITH TESLA REP. DATA OUTLET FOR EXPLOSION PROOF DRYER SHALL BE INSTALLED OUTSIDE MIXING ROOM, MOUNTED ON EXTERIOR WALL OF PAINT BOOTH. PROVIDE ALL NECESSARY DEVICES FOR A CODE COMPLIANT AND COMPLETE INSTALLATION. COORDINATE FINAL LOCATION AND EXACT REQUIREMENTS WITH TESLA REP., PRIOR TO START OF WORK. (NOTE: (WHEN POSSIBLE) INSTALL DATA DEVICES GREATER THAN 3' FROM ANY PAINT BOOTH/PREP BOOTH DOOR OR OPENING, TO AVOID CLASSIFIED HAZARDOUS AREAS. ALL DEVICES SHALL BE LISTED FOR THE CLASSIFIED HAZARDOUS AREA, IN WHICH THEY ARE INSTALLED. SEE SHEET E3.01 FOR ADDITIONAL INFORMATION/REQUIREMENTS FOR CLASSIFIED HAZARDOUS AREAS.)

5. PROVIDE DATA RECEPTACLE/DROP IN MIXING ROOM. PROVIDE ALL NECESSARY DEVICES FOR A CODE COMPLIANT AND COMPLETE INSTALLATION. COORDINATE FINAL LOCATION AND EXACT REQUIREMENTS WITH TESLA REP., PRIOR TO START OF WORK. (NOTE: ALL DEVICES (CONDUIT, FITTING ,BOX, ETC...) SHALL BE LISTED FOR THE CLASSIFIED HAZARDOUS AREA, IN WHICH THEY ARE INSTALLED. SEE SHEET E3.01 FOR ADDITIONAL INFORMATION/REQUIREMENTS FOR CLASSIFIED HAZARDOUS AREAS.)

6. CONTRACTOR TO PROVIDE TWO (CAT6 OR CAT7 RJ45) DROPS AND DATA RECEPTACLE MOUNTED AT OUTSIDE MIXING ROOM FOR "AXALTA" COMPUTER. COORDINATE FINAL LOCATION, CONDUIT ROUTING, AND EXACT REQUIREMENTS WITH TESLA REP. DATA OUTLET FOR "AXALTA" COMPUTER SHALL BE INSTALLED OUTSIDE MIXING ROOM, MOUNTED ON FRONT EXTERIOR WALL OF MIXING ROOM. PROVIDE ALL NECESSARY DEVICES FOR A CODE COMPLIANT AND COMPLETE INSTALLATION. COORDINATE FINAL LOCATION AND EXACT REQUIREMENTS WITH TESLA REP., PRIOR TO START OF WORK. (NOTE: (WHEN POSSIBLE) INSTALL DEVICES GREATER THAN 3' FROM ANY PAINT BOOTH/PREP BOOTH DOOR OR OPENING, TO AVOID CLASSIFIED HAZARDOUS AREAS. ALL DEVICES SHALL BE LISTED FOR THE CLASSIFIED HAZARDOUS AREA, IN WHICH THEY ARE INSTALLED. SEE SHEET E3.01 FOR ADDITIONAL INFORMATION/REQUIREMENTS FOR CLASSIFIED HAZARDOUS AREAS.)

THE RESPONSE GROUP, INC.
An Electrical Engineering Corporation
6705 Academy N.E. Suite B
Albuquerque, New Mexico 87109
Phone:(505) 323-7629 Fax:(505) 323-7594
E-mail: theresponsegroup@trg-inc.net

100% CDs

MODULUS ARCHITECTS
AND LAND USE PLANNING
8220 SAN PEDRO DR NE
SUITE 520
ALBUQUERQUE, NEW MEXICO 87113
PHONE (505) 338-1499
FAX (505) 338-1498

COLORADO LICENSED
THOMAS F. RUEHLE
63540
PROFESSIONAL ENGINEER
2/13/2024
23303

PROJECT TITLE

TESLA COLLISION CENTER

6951
S.BLACKHAWK
STREET,
BUILDING 1,
CENTENIAL. CO
80112

PROJECT MANAGER

DRAWN BY:

ISSUE / REVISION

SHEET TITLE

ENLARGED LOW VOLTAGE PLANS

SCALE:

JOB NO.

SHEET NUMBER

E6.01

COPYRIGHT 2021 MODULUS ARCHITECTS

COMcheck Software Version 4.1.5.5

Exterior Lighting Compliance Certificate

Project Information

Energy Code: 2018 IECC
Project Title: Tesla Collision Center
Project Type: Alteration
Exterior Lighting Zone: 2 (Light Industrial area with limited nighttime use (LZ2))

Construction Site:
6951 S Blackhawk Street
Centenial, CO 80112

Owner/Agent:

Designer/Contractor:

Allowed Exterior Lighting Power

A Area/Surface Category	B Quantity	C Allowed Watts / Unit	D Tradable Wattage	E Allowed Watts (B X C)
Pedestrian and vehicular entrances and exits	60 ft of door	14	Yes	840
			Total Tradable Watts (a) =	840
			Total Allowed Watts =	840
			Total Allowed Supplemental Watts (b) =	400

(a) Wattage tradeoffs are only allowed between tradable areas/surfaces.
(b) A supplemental allowance equal to 400 watts may be applied toward compliance of both non-tradable and tradable areas/surfaces.

Proposed Exterior Lighting Power

A Fixture ID : Description / Lamp / Wattage Per Lamp / Ballast	B Lamps/ Fixture	C # of Fixtures	D Fixture Watt.	E (C X D)
Pedestrian and vehicular entrances and exits (60 ft of door width): Tradable Wattage				
LED 1: Other:	1	9	24	216
			Total Tradable Proposed Watts =	216

Exterior Lighting PASSES

Exterior Lighting Compliance Statement

Compliance Statement: The proposed exterior lighting alteration project represented in this document is consistent with the building plans, specifications, and other calculations submitted with this permit application. The proposed exterior lighting systems have been designed to meet the 2018 IECC requirements in COMcheck Version 4.1.5.5 and to comply with any applicable mandatory requirements listed in the Inspection Checklist.

Thomas F. Ruehle, P.E. — Name - Title
Signature
2/13/2024 — Date

Project Title: Tesla Collision Center — Report date: 02/13/24
Data filename: F:\23303 - Englewood Tesla\Electrical\2-Design\5-Calculations\23303 Comcheck.cck — Page 2 of 8

COMcheck Software Version 4.1.5.5

Interior Lighting Compliance Certificate

Project Information

Energy Code: 2018 IECC
Project Title: Tesla Collision Center
Project Type: Alteration

Construction Site:
6951 S Blackhawk Street
Centenial, CO 80112

Owner/Agent:

Designer/Contractor:

Allowed Interior Lighting Power

A Area Category	B Floor Area (ft2)	C Allowed Watts / ft2	D Allowed Watts (B X C)
1-Parts and Storage (Common Space Types:Storage)	4434	0.63	2793
2-shop area (Common Space Types:Workshop)	15136	1.14	17255
3-compressor room (Common Space Types:Electrical/Mechanical)	157	0.43	68
4-Vehicle circulation (Common Space Types:Corridor/Transition >=8 ft wide)	16356	0.66	10795
		Total Allowed Watts =	30911

Proposed Interior Lighting Power

A Fixture ID : Description / Lamp / Wattage Per Lamp / Ballast	B Lamps/ Fixture	C # of Fixtures	D Fixture Watt.	E (C X D)
Parts and Storage (Common Space Types:Storage 4434 sq.ft.)				
LED 6: L113/L114: Other:	1	21	125	2625
shop area (Common Space Types:Workshop 15136 sq.ft.)				
LED 8: L113/L114: Other:	1	99	125	12375
LED 13: L133/L134: Other:	1	4	150	600
compressor room (Common Space Types:Electrical/Mechanical 157 sq.ft.)				
LED 10: L153/L154: Other:	1	2	32	64
Vehicle circulation (Common Space Types:Corridor/Transition >=8 ft wide 16356 sq.ft.)				
LED 13: L113/L114: Other:	1	53	125	6625
			Total Proposed Watts =	22289

Interior Lighting PASSES

Interior Lighting Compliance Statement

Compliance Statement: The proposed interior lighting alteration project represented in this document is consistent with the building plans, specifications, and other calculations submitted with this permit application. The proposed interior lighting systems have been designed to meet the 2018 IECC requirements in COMcheck Version 4.1.5.5 and to comply with any applicable mandatory requirements listed in the Inspection Checklist.

Thomas F. Ruehle, P.E. — Name - Title
Signature
2/13/2024 — Date

Project Title: Tesla Collision Center — Report date: 02/13/24
Data filename: F:\23303 - Englewood Tesla\Electrical\2-Design\5-Calculations\23303 Comcheck.cck — Page 1 of 8

MODULUS ARCHITECTS AND LAND USE PLANNING
8220 SAN PEDRO DR NE
SUITE 520
ALBUQUERQUE, NEW MEXICO 87113
PHONE (505) 338-1499
FAX (505) 338-1498

COLORADO LICENSED
THOMAS F. RUEHLE
63540
PROFESSIONAL ENGINEER
2/13/2024
23303

THE RESPONSE GROUP, INC.
An Electrical Engineering Corporation
6705 Academy N.E. Suite B
Albuquerque, New Mexico 87109
Phone:(505) 323-7629 Fax:(505) 323-7594
E-mail: theresponsegroup@trg-inc.net

100% CDs

PROJECT TITLE

TESLA COLLISION CENTER

6951
S.BLACKHAWK
STREET,
BUILDING 1,
CENTENIAL, CO
80112

PROJECT MANAGER

DRAWN BY:

ISSUE / REVISION

SHEET TITLE

ENERGY CODE COMPLIANCE

SCALE:

JOB NO.

SHEET NUMBER

E7.00

COPYRIGHT 2021 MODULUS ARCHITECTS

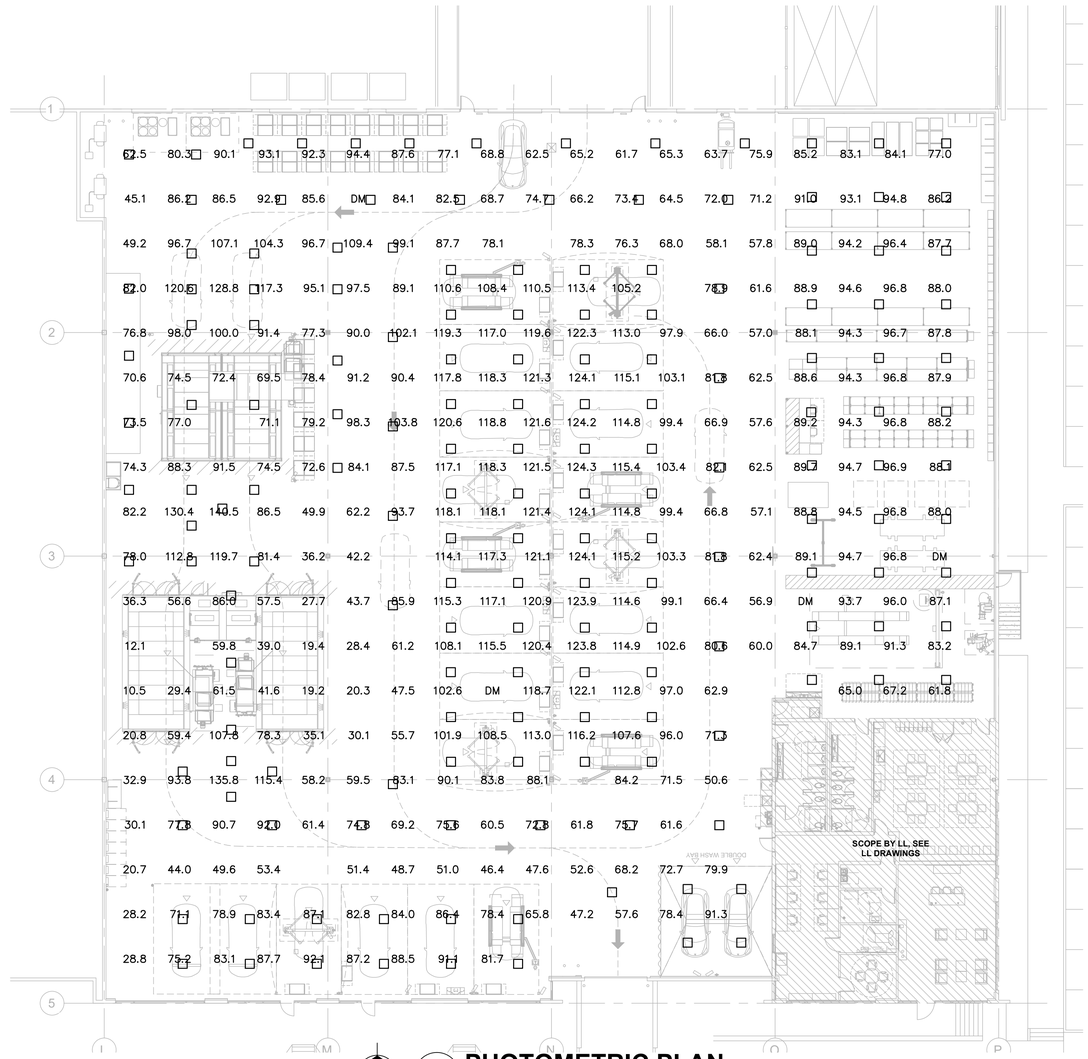

1 PHOTOMETRIC PLAN

SCALE: **1/16" = 1'-0"**

MODULUS ARCHITECTS
AND LAND USE PLANNING
8220 SAN PEDRO DR NE
SUITE 520
ALBUQUERQUE, NEW
MEXICO 87113
PHONE (505) 338-1499
FAX (505) 338-1498

COLORADO LICENSED
THOMAS F. RUEHLE
63540
PROFESSIONAL ENGINEER
2/13/2024
23303

PROJECT TITLE

TESLA COLLISION CENTER

6951
S.BLACKHAWK
STREET,
BUILDING 1,
CENTENIAL. CO
80112

PROJECT MANAGER

DRAWN BY:

ISSUE / REVISION

1	11-29-23	CITY COMMENTS

SHEET TITLE

PHOTOMETRIC PLAN

SCALE:

JOB NO.

SHEET NUMBER

EPH1.00

100% CDs

THE RESPONSE GROUP, INC.
An Electrical Engineering Corporation
6705 Academy N.E. Suite B
Albuquerque, New Mexico 87109
Phone:(505) 323-7629 Fax:(505) 323-7594
E-mail: theresponsegroupltrg-inc.net

MECHANICAL SPECIFICATIONS

GENERAL
A. THE GENERAL CONDITIONS OF THE GENERAL SPECIFICATIONS, ALONG WITH ALL APPLICABLE INSTRUCTIONS TO BIDDERS, SHALL FORM A PART OF THIS SECTION OF THE SPECIFICATIONS.

B. REFERENCE IS MADE TO REQUISITES FOR BIDDERS AND CONTRACTORS UNDER OTHER SECTIONS OF THESE SPECIFICATIONS, WHICH SHALL BE CONSIDERED BINDING, UNLESS OTHERWISE NOTED UNDER THIS SECTION.

C. ALL MECHANICAL WORK SHALL COMPLY WITH 2021 IBC, IMC, AND IPC, AND 2015 IECC.

SCOPE
EACH CONTRACTOR SHALL THOROUGHLY ACQUAINT HIMSELF WITH THE CONSTRUCTION DETAILS, BOTH ON TENANT CONSTRUCTION DRAWINGS AND LANDLORD'S AS REFERRED TO, BEFORE SUBMITTING HIS BID AS NO ALLOWANCES WILL BE MADE BECAUSE OF CONTRACTOR'S UNFAMILIARITY WITH THESE DETAILS. ALL PERFORMANCE OF CONSTRUCTION SHALL BE AS REQUIRED BY THE PACE OF THE GENERAL CONSTRUCTION.

INSPECTION OF SITE
ALL PROPOSALS SHALL PRECLUDE THAT CONTRACTOR IS FAMILIAR WITH JOBSITE CONDITIONS AND UTILITY LOCATIONS AND THE LACK OF SPECIFIC INFORMATION ON THE DRAWINGS SHALL NOT RELIEVE THE CONTRACTOR OF ANY RESPONSIBILITY.

PERMITS
ALL PERMITS AND LICENSES NECESSARY FOR THE PROPER EXECUTION OF THE WORK SHALL BE SECURED AND PAID FOR BY THE SUBCONTRACTOR INVOLVED.

CODE REQUIREMENTS
ALL WORK UNDER THIS CONTRACT SHALL COMPLY WITH THE PROVISIONS OF THE SPECIFICATIONS, DRAWINGS OR AS DIRECTED BY THE OWNER, AND SHALL SATISFY ALL APPLICABLE CODES, ORDINANCES, AND/OR REGULATIONS OF THE GOVERNING BODIES, WHETHER SO SHOWN OR NOT, AND ALL MODIFICATIONS REQUIRED BY SUCH AUTHORITIES SHALL BE MADE BY THE CONTRACTOR WITHOUT ANY ADDITIONAL COST TO OWNER.

MATERIALS AND WORKMANSHIP
A. ALL MANUFACTURED ARTICLES, MATERIALS, AND EQUIPMENT SHALL BE APPLIED AS RECOMMENDED BY THE MANUFACTURERS, AND UNLESS OTHERWISE SPECIFIED SHALL BE NEW, AND FREE FROM ANY AND ALL DEFECTS. LIKE MATERIALS USED SHALL BE OF THE SAME MANUFACTURE AND QUALITY UNLESS OTHERWISE SPECIFIED.

B. ALL WORK UNDER THIS CONTRACT SHALL BE PERFORMED BY COMPETENT WORKMEN AND EXECUTED IN A NEAT AND WORKMANLIKE MANNER. WORK SHALL BE PROPERLY PROTECTED DURING CONSTRUCTION AND COMPLETION, INSTALLATION SHALL BE THOROUGHLY CLEANED OF ALL DEBRIS PRESENT AS A RESULT OF THIS CONTRACT AND SHALL BE REMOVED FROM THE PREMISES, DO NOT ABANDON.

CODES AND REGULATIONS
EACH SUBCONTRACTOR SHALL COMPLY WITH ALL LAWS, ORDINANCES, RULES AND REGULATIONS BEARING ON THE CONDUCT OF THE WORK AS DRAWN AND SPECIFIED. IF A SUBCONTRACTOR OBSERVES THAT THE DRAWINGS AND SPECIFICATIONS ARE AT A VARIANCE, HE SHALL PROMPTLY NOTIFY THE GENERAL CONTRACTOR AND THE TENANT IN WRITING. IF ANY SUBCONTRACTOR PERFORMS ANY WORK KNOWING IT TO BE CONTRARY TO LAWS, ORDINANCES, RULES AND REGULATIONS AND WITHOUT GIVING SUCH NOTICE, THE SUBCONTRACTOR SHALL BEAR ALL COSTS ARISING THEREFROM.

PROTECTION OF WORK AND PROPERTY
A. EACH SUBCONTRACTOR SHALL CONTINUOUSLY MAINTAIN ADEQUATE PROTECTION OF ALL HIS WORK FROM DAMAGE AND SHALL PROTECT THE OWNER'S PROPERTY FROM INJURY OR LOSS ARISING FROM HIS WORK. ANY SUCH DAMAGE, INJURY, OR LOSS, EXCEPT SUCH AS MAY BE DIRECTLY DUE TO CAUSES BEYOND HIS CONTROL AND NOT TO HIS FAULT OR NEGLIGENCE, SHALL BE THE RESPONSIBILITY OF THE SUBCONTRACTOR. HE SHALL ADEQUATELY PROTECT ADJACENT PROPERTY AS WELL.

B. EACH SUBCONTRACTOR SHALL TAKE ALL NECESSARY PRECAUTIONS FOR THE SAFETY OF THEIR EMPLOYEES ON THE WORK AND SHALL COMPLY WITH ALL PROVISIONS OF FEDERAL, STATE AND LOCAL BUILDING CODES AND SAFETY LAWS TO PREVENT ACCIDENTS OR INJURY TO PERSONS ON OR ADJACENT TO THE PREMISES WHERE THE WORK IS BEING PERFORMED. EACH SUBCONTRACTOR SHALL MAINTAIN ALL INSURANCE REQUIRED TO PROTECT HIMSELF, THE OWNER AND TENANT FOR THE DURATION OF THE WORK AGAINST PROPERTY DAMAGE AND PUBLIC LIABILITY.

CHANGES IN THE WORK
THE TENANT, WITHOUT INVALIDATING THE CONTRACT, MAY ORDER EXTRA WORK OR MAKE CHANGES BY ALTERING, ADDING TO, OR DEDUCTING FROM THE WORK, WITH CONTRACT SUM BEING ADJUSTED ACCORDINGLY.

COOPERATION
ALL WORK UNDER THESE SPECIFICATIONS SHALL BE ACCOMPLISHED IN CONJUNCTION WITH OTHER CONTRACTORS AND TRADES OF THIS PROJECT IN A MANNER WHICH WILL ALLOW EACH CONTRACTOR AND TRADE SUFFICIENT TIME AT THE PROPER STAGE OF CONSTRUCTION TO FULFILL HIS CONTRACTS. CONTRACTORS SHALL CONTACT OWNER FOR INSTRUCTIONS SHOULD ANY QUESTIONS ARISE BETWEEN TRADES AS TO THE INSTALLATION OF LINES, DUCTS, CONDUITS, FIXTURES, OR EQUIPMENT, OR SHOULD IT APPEAR DESIRABLE TO ANY GENERAL CONSTRUCTION WHICH WOULD AFFECT THE APPEARANCE OR STRENGTH OF THE STRUCTURE.

SUBSTITUTION OF MATERIALS
MANUFACTURERS ARE LISTED ON PLANS TO ESTABLISH A STANDARD. THE PRODUCTS OF OTHER MANUFACTURERS WILL BE ACCEPTABLE, IF IN THE OPINION OF THE TENANT, THE SUBSTITUTE MATERIAL IS OF QUALITY EQUAL TO OR BETTER THAN THE MATERIAL SPECIFIED, AND WILL SERVE WITH EQUAL EFFICIENCY AND DEPENDABILITY, FOR THE PURPOSE OF WHICH THE ITEMS SPECIFIED WERE INTENDED.

SHOP DRAWINGS
SHOP DRAWINGS AND CATALOG DATA ON ALL MAJOR ITEMS OF EQUIPMENT AND SYSTEMS, AND OTHER SUCH ILLUSTRATIVE MATERIAL THAT MAY BE CONSIDERED NECESSARY BY THE TENANT, SHALL BE SUBMITTED BY THIS CONTRACTOR IN ADEQUATE TIME TO PREVENT DELAY AND/OR CONSTRUCTION MODIFICATIONS.

DRAWINGS AND SPECIFICATIONS
A. THE DRAWINGS DIAGRAMMATICALLY INDICATE THE LOCATIONS OF THE VARIOUS LINES, DUCTS, CONDUITS, FIXTURES, AND EQUIPMENT AND THE METHOD OF CONNECTING AND CONTROLLING THEM. IT IS NOT INTENDED TO SHOW EVERY CONNECTION IN DETAIL AND ALL FITTINGS REQUIRED FOR A COMPLETE SYSTEM.

B. SHOULD ANY CHANGES BE DEEMED NECESSARY BY THE CONTRACTOR, TO ANY ITEMS SHOWN ON CONTRACT DRAWINGS, SHOP DRAWINGS, DESCRIPTIONS, AND THE REASON FOR THE PROPOSED CHANGES SHALL BE SUBMITTED TO THE OWNER FOR APPROVAL.

RESPONSIBILITY
A. THE CONTRACTOR WILL BE HELD RESPONSIBLE FOR THE SATISFACTORY AND COMPLETE EXECUTION OF ALL WORK INCLUDED IN HIS CONTRACT. HE SHALL PRODUCE COMPLETE AND FULLY OPERATIONAL SYSTEMS AND PROVIDE ALL INCIDENTAL ITEMS REQUIRED AS PART OF HIS WORK, REGARDLESS OF WHETHER SUCH ITEM IS PARTICULARLY SPECIFIED OR INDICATED. FOR EXAMPLE, ON SINK INSTALLATIONS, ESCUTCHEONS SHALL BE PROVIDED FOR COUNTERTOP PENETRATIONS, ALTHOUGH THEY WERE NOT SPECIFICALLY IDENTIFIED IN THE CONTRACT DOCUMENTS.

B. CONTRACTOR SHALL SUPPLY TO TENANT A CERTIFIED AIR BALANCE REPORT AT COMPLETION OF PROJECT. THIS SHALL BE REQUIRED FOR BOTH REMODELED AND NEW STORES.

HEATING, VENTILATING AND AIR CONDITIONING
GENERAL
A. THE WORK COVERED BY THIS SECTION OF THESE SPECIFICATIONS SHALL BE ACCOMPLISHED IN ACCORDANCE WITH THE RESPECTIVE DRAWINGS, INFORMATION OR INSTRUCTIONS TO BIDDERS, GENERAL CONDITIONS, ADDENDA, OR DIRECTIVES WHICH MAY BE ISSUED BY THE OWNER, SHALL BE COMPLIED WITH IN EVERY ASPECT.

B. THE LISTING HEREIN OF AN ARTICLE OR MATERIAL, OPERATION OR METHOD, REQUIRES THAT THE CONTRACTOR SHALL FURNISH AND INSTALL EACH ITEM LISTED, UNLESS SPECIFICALLY NOTED TO THE CONTRARY. THE CONTRACTOR SHALL PERFORM EACH OPERATION PRESCRIBED OR LISTED ACCORDING TO THE CONDITIONS STATED.

EXAMINATION OF SITE
ALL CONTRACTORS SUBMITTING PROPOSALS FOR THIS WORK SHALL FIRST EXAMINE THE SITE AND ALL EXISTING CONDITIONS AFFECTING HIS WORK.

SCOPE
FURNISH ALL MATERIALS, EQUIPMENT, AND LABOR NECESSARY FOR A COMPLETE AND FULLY OPERATIONAL HEATING, VENTILATING, AND AIR CONDITIONING SYSTEM EXCEPT AS SPECIFICALLY EXCLUDED BY DRAWINGS AND/OR BY TENANT'S DIRECTIONS.

DUCTWORK
A. SQUARE/RECTANGULAR DUCTWORK SHALL BE CONSTRUCTED OF NEW GALVANIZED PRIME GRADE SHEET STEEL ALL 90 DEGREE ELBOWS FOR ROUND DUCTWORK SHALL BE FIVE (5) PIECE. ALL LONGITUDINAL SEAMS SHALL BE FORMED BY PITTSBURGH LOCKS. JOINTS SHALL BE SWAGGED WITH ONE-HALF INCH (1/2") OVERLAP.
B. ROUND DUCTWORK SHALL BE CONSTRUCTED OF NEW GALVANIZED PRIME GRADE SHEET STEEL.
C. ALL SUPPLY AIR DUCTS, RETURN AIR DUCTS AND OUTSIDE AIR DUCTS IN AREAS ABOVE CEILINGS SHALL BE GALVANIZED STEEL WITH 2" THICK EXTERNAL ACOUSTICAL AND THERMAL INSULATION - MINIMUM R-6.
D. FLEXIBLE AIR DUCT FOR CONNECTIONS BETWEEN S.M. DUCT AND DIFFUSER SHALL BE AIR DUCT LISTED BY UNDERWRITERS LABORATORIES UNDER UL STANDARD 181 AS A CLASS 1 FLEXIBLE AIR DUCT AND COMPLYING WITH NFPA STANDARDS 90A AND 90B. DUCT SHALL BE FACTORY MADE AND COMPOSED OF A CPE LINER DUCT PERMANENTLY BOUNDED TO A COATED SPRING STEEL WIRE HELIX AND SUPPORTING A FIBER GLASS INSULATING BLANKET. R-6 LOW PERMEABILITY OUTER VAPOR BARRIER OF FIBER GLASS REINFORCED FILM LAMINATE SHALL COMPLETE THE COMPOSITE.
E. CONTRACTOR SHALL SUPPLY AND INSTALL INSECT SCREENS ON ALL DUCT OPENINGS WHICH TERMINATE OUTDOORS. INSECT SCREENS SHALL BE 10 GAUGE, ONE-HALF INCH (1/2") MESH IN REMOVABLE GALVANIZED STEEL FRAMES.
F. ALL DUCTWORK SHALL BE DESIGNED IN ACCORDANCE WITH THE PROCEDURES DESCRIBED IN THE LATEST EDITION OF THE AMERICAN SOCIETY OF HEATING REFRIGERATION AND AIR CONDITIONING ENGINEERS GUIDE (ASHRAE), FABRICATED AND INSTALLED IN ACCORDANCE WITH THE METHODS RECOMMENDED IN THE SHEET METAL AND AIR CONDITIONING CONTRACTORS NATIONAL ASSOCIATION (SMACNA) HVAC DUCT CONSTRUCTION STANDARDS - METAL AND FLEXIBLE
G. ALL JOINTS, LONGITUDINAL AND TRANSVERSE SEAMS, AND CONNECTIONS IN DUCTWORK MUST BE SECURELY SEALED USING WELDMENTS; MECHANICAL FASTENERS WITH SEALS, GASKETS, OR MASTICS; MESH AND MASTIC SEALING SYSTEMS; OR TAPES. TAPES AND MASTICS MUST BE LISTED AND LABELED IN ACCORDANCE WITH UL 181A OR UL 181B. ALL LONGITUDINAL AND TRANSVERSE JOINTS, SEAMS AND CONNECTIONS OF SUPPLY AND RETURN DUCTS OPERATING AT STATIC PRESSURES LESS THAN OR EQUAL TO 2" W.G. SHALL BE SECURELY FASTENED AND SEALED WITH WELDS GASKETS, MASTICS (ADHESIVES), MASTIC-PLUS-EMBEDDED FABRIC SYSTEMS OR TAPES INSTALLED IN ACCORDANCE WITH MANUFACTURER'S INSTALLATION INSTRUCTIONS.
H. MECHANICAL FASTENERS AND SEALS, MASTICS, OR GASKETS MUST BE USED WHEN CONNECTING DUCTS TO FANS AND OTHER AIR DISTRIBUTION EQUIPMENT.

HANGERS AND SUPPORTS
A. ALL HORIZONTAL DUCTS HAVING A DIMENSION OF 40 INCHES AND LESS SHALL BE SUPPORTED BY MEANS OF BAND IRON HANGERS OF NO. 18 U.S. GAUGE ATTACHED TO DUCT BY MEANS OF RIVETS, SCREWS OR CLAMPS, AND FASTENED TO STRUCTURE ABOVE BY TOGGLE BOLTS OR OTHER MEANS. EACH SECTION OF DUCTWORK SHALL HAVE AT LEAST ONE PAIR OF SUPPORTS. VERTICAL DUCTS SHALL BE SUPPORTED WITH 1-1/4" x 1-1/4" x 1/4" ANGLES AT FLOOR PENETRATIONS.

B. ALL HORIZONTAL DUCTS HAVING A DIMENSION OF 40 INCHES AND MORE SHALL BE SUPPORTED BY MEANS OF ANGLE IRON TRAPEZE HANGERS. EACH SECTION OF DUCTWORK SHALL HAVE AT LEAST ONE PAIR OF SUPPORTS.

FLASHING
A. CONTRACTOR SHALL PROVIDE WATER TIGHT 24 GA. SHEET METAL FLASHINGS AT ALL EXTERIOR WALLS AND ROOF PENETRATIONS.

B. ALL CUTTING OF ROOF OPENINGS, SUPPORTS FOR ROOF OPENINGS, PITCH PANS, ROOF CURBS, FLASHINGS, COUNTER FLASHINGS, REPAIR TO ROOF, ETC. ASSOCIATED WITH HVAC SUBCONTRACTOR SHALL BE INCLUDED IN THE RESPONSIBILITY OF THE HVAC SUBCONTRACTOR. HE SHALL EMPLOY THE LANDLORD'S ROOFERS FOR THIS WORK TO MAINTAIN THE ROOF WARRANTY.

DAMPERS
A. SPLITTER DAMPERS SHALL BE FABRICATED OF SHEET STEEL NOT LESS THAN NO. 16 U.S. GAUGE WITH THE LEADING EDGE HEMMED. EACH DAMPER TO BE SIZED ADEQUATELY TO COVER THE SMALLER OF THE TWO OPENINGS IT CONTROLS. DAMPERS SHALL BE CONTROLLED AS FOLLOWS:

EXPOSED OR ACCESSIBLE DUCTWORK - LOCKING QUADRANTS EQUAL TO YOUNG REGULATOR NO. 1 WITH DAMPER ROD END BEARINGS ON OPPOSITE END.

CONCEALED DUCTWORK - LOCKING QUADRANT EQUAL TO YOUNG REGULATOR NO. 315 (CHROMIUM PLATED WITH DAMPER ROD END BEARINGS ON BOTH ENDS).

B. VOLUME DAMPERS SHALL BE OF THE OPPOSED INTERLOCKING TYPE AS MANUFACTURED BY AMERICAN FOUNDRY AND FURNACES CO. (AFFCO) OR EQUAL. BLADES SHALL BE OF NO. 16 GAUGE SHEET METAL AND SHALL NOT EXCEED 48" IN LENGTH OR 12" IN WIDTH. BLADES SHALL BE ON ONE-HALF INCH (1/2") DIAMETER RUSTPROOF AXLE. BEARINGS TO BE OF THE SELF-LUBRICATING FERRULE TYPE.

C. FIRE DAMPERS/ CEILING RADIATION DAMPERS SHALL BE SUPPLIED AND INSTALLED BY HVAC CONTRACTOR AT DUCT PENETRATIONS IN FIRE RATED WALLS, FLOORS, CEILINGS AND ROOF AS REQUIRED. COORDINATE WITH LANDLORD, LOCAL FIRE MARSHALL AND ALL CODES AND GOVERNING AUTHORITIES HAVING JURISDICTION. DAMPERS SHALL BE LISTED FOR THE APPLICATION IN WHICH THEY ARE INSTALLED. INSTALL ACCESS PANELS WHERE NECESSARY FOR ACCESS TO ALL DAMPERS.

D. FIELD FABRICATED TURNING VANES SHALL BE ACCEPTABLE IN SQUARE ELBOWS. PROVIDE AND INSTALL BARBER-COLMAN AIRTURNS OR EQUAL. TURNING VANES SHALL BE OF THE SAME GAUGE METAL AS THE DUCT IN WHICH THEY ARE INSTALLED. RADIUS ELBOWS SHALL HAVE A CENTER LINE RADIUS OF ONE AND ONE-HALF (1-1/2) TIMES THE DUCT WIDTH.

DUCTWORK - EXCEPTIONS
DUCTWORK FOR EXHAUST OR OUTSIDE SUPPLY AIR SHALL BE ALL METAL AND CONSTRUCTED ACCORDING TO RECOMMENDED PRACTICES OF THE LATEST ISSUE OF ASHRAE AND SMACNA STANDARDS.

SUPPORT OF DUCT SYSTEM
HANGER DESIGN SHALL BE AS DESCRIBED IN THE LATEST EDITION OF THE "SMACNA" MANUAL. REINFORCEMENT MEMBERS MAY BE USED TO SUPPORT DUCT SYSTEM PROVIDED DETAILS OUTLINED IN THE "SMACNA" MANUAL ARE ADHERED TO.

DUCTS SHALL BE SUPPORTED AT ALL TURNS AND TRANSITIONS AND NOT MORE THAN 8'-0" O.C. STRAIGHT DUCTS UP TO 59" MAX. DIMENSIONS SHALL BE SUPPORTED 6'-0" O.C. DUCTS OVER 60" MAX. DIMENSIONS SHALL BE SUPPORTED AT 4'-0" O.C.

REINFORCEMENT ALL DUCTS SHALL BE REINFORCED ACCORDING TO THE LATEST EDITION OF SMACNA MANUAL. MATERIALS FOR REINFORCEMENT MEMBERS SHALL BE GALVANIZED STEEL. ALL SCREWS AND WASHERS SHALL BE PLATED OR GALVANIZED.

TESTING, ADJUSTING AND BALANCING NEBB OR TABB CERTIFIED CONTRACTOR SHALL DEMONSTRATE OPERATION OF SYSTEM TO FULL SATISFACTION OF TENANT, SHALL BALANCE AIR FLOW IN ACCORDANCE WITH AIR QUANTITIES ON DRAWINGS AND SHALL RECORD VOLUME READINGS IN ACCORDANCE WITH ASHRAE AND PROVIDE SAME TO TENANT. OPERATION AND MAINTENANCE DOCUMENTATION MUST BE PROVIDED TO THE OWNER THAT INCLUDES AT LEAST THE FOLLOWING INFORMATION:
A. EQUIPMENT CAPACITY (INPUT AND OUTPUT) AND REQUIRED MAINTENANCE ACTIONS.
B. EQUIPMENT OPERATION AND MAINTENANCE MANUALS.
C. HVAC SYSTEM CONTROL MAINTENANCE AND CALIBRATION INFORAMTION. INCLUDING WIRING DIAGRAMS, SCHEMATICS, AND CONTROL SEQUENCE DESCRIPTIONS; DESIRED OR FIELD-DETERMINED SET POINTS MUST BE PERMANENTLY RECORDED ON CONTROL DRAWINGS, AT CONTROL DEVICES, OR, FOR DIGITAL CONTROL SYSTEMS, IN PROGRAMMING COMMENTS.
D. COMPLETE NARRATIVE OF HOW EACH SYSTEM IS INTENDED TO OPERATE. ALL PIPING SHALL WITHSTAND AIR PRESSURE TESTING PER GOVERNING PLUMBING CODE.

GUARANTEE ALL MATERIALS, EQUIPMENT, AND WORKMANSHIP SHALL BE GUARANTEED FOR A PERIOD OF ONE (1) YEAR AFTER DATE OF ACCEPTANCE. THE COMPLETED SYSTEM SHALL BE FULLY OPERATIONAL AND ACCEPTANCE BY TENANT SHALL BE A CONDITION OF THIS CONTRACT. ALL WORK FOUND TO BE DEFECTIVE SHALL BE REPAIRED OR REPLACED BY THIS SUBCONTRACTOR WITHOUT ADDITIONAL COST TO THE TENANT.

ACCESSORY ITEMS ALL MANUAL DAMPERS, FIRE DAMPERS, TURNING VANES, REGISTER CONNECTIONS, ACCESS DOORS OR OTHER ASSOCIATED ACCESSORIES SHALL BE INSTALLED ACCORDING TO THE LATEST EDITION OF "SMACNA" MANUAL.

1 **MECHANICAL SPECIFICATIONS**
SCALE: **NTS**

COPYRIGHT 2021 MODULUS ARCHITECTS

MODULUS
ARCHITECTS
AND LAND USE
PLANNING
8220 SAN PEDRO DR NE
SUITE 520
ALBUQUERQUE, NEW
MEXICO 87113
PHONE (505) 338-1499
FAX (505) 338-1498

ArSed Engineering Group, LLC.
4700 Lincoln Road, NE | Suite 101 | Albuquerque, NM 87109 | 505.761.3100

COLORADO LICENSED
DANIEL A. LOWE
54935
PROFESSIONAL ENGINEER
02/13/2024

PROJECT TITLE

TESLA COLLISION CENTER
6951 S. Blackhawk St., BDG 1
Centennial, CO, 80112

PROJECT MANAGER

DRAWN BY:

ISSUE / REVISION

SHEET TITLE
MECHANICAL SPECIFICATIONS

SCALE:
JOB NO. 2000.01

SHEET NUMBER
M0.00

Permit Documents

ASHRAE 62.1/ 2021 IMC Ventilation Calculations

Zone Name/Symbol	Occupancy Category	Area (sq ft) Az	People Automatic Pz	People Outdoor Rate Rp	Area Outdoor Rate Ra	Zone Discharge Air Flow Vbz	Zone Air Distribution Effectiveness Ez	Zone Outside Air Flow Voz
111 Service Area	Sorting, packing, light assembly	36378	50	7.5	0.12	4740	0.8	5925

1 **MECHANICAL COMPLIANCE**
SCALE: **NTS**

COPYRIGHT 2021 MODULUS ARCHITECTS

Tesla Collision Center, Centennial, CO

MODULUS
ARCHITECTS
AND LAND USE
PLANNING
8220 SAN PEDRO DR NE
SUITE 520
ALBUQUERQUE, NEW
MEXICO 87113
PHONE (505) 338-1499
FAX (505) 338-1498

ArSed Engineering Group, LLC.
4700 Lincoln Road, NE | Suite 101 | Albuquerque, NM 87109 | 505.761.3100

COLORADO LICENSED
DANIEL A. VIGIL
54935
PROFESSIONAL ENGINEER
02/13/2024

PROJECT TITLE

TESLA COLLISION CENTER
6951 S. Blackhawk St., BDG 1
Centennial, CO, 80112

PROJECT MANAGER

DRAWN BY:

ISSUE / REVISION

SHEET TITLE

MECHANICAL COMPLIANCE

SCALE:
JOB NO. 2000.01

SHEET NUMBER

M0.30

Permit Documents

GENERAL NOTES

1. EQUIPMENT CAPACITIES BASED ON OPERATION AT SITE ELEVATION.
2. DUCT DIMENSIONS SHOWN ON DRAWINGS ARE NET INSIDE DIMENSIONS (DUCT TO BE INSTALLED IN TI PORTION).
3. EXACT LOCATION OF ALL GRILLES, DIFFUSERS, AND REGISTERS SHALL BE COORDINATED WITH LIGHTING AND REFLECTED CEILING PLANS. WHERE INSTALLATIONS CONFLICT, FINAL LOCATION SHALL BE APPROVED AND OBTAINED FROM ARCHITECT (DURING TI PORTION ONLY).
4. PROVIDE TURNING VANES IN ALL SQUARE (90 DEGREE) ELBOWS (EXCEPT R.A. DUCTWORK).
5. EACH ROUND BRANCH TAKE-OFF SHALL BE MADE WITH SPIN-IN DAMPER FITTING.
6. INSTALL SEISMIC BRACING AS REQUIRED ON ALL DUCT AND EQUIPMENT PER THE SEISMIC DESIGN CATEGORY AND IMPORTANCE FACTOR LISTED IN STRUCTURAL DRAWINGS.
7. JOINTS AND SEAMS ON LOW VELOCITY SUPPLY, RETURN AND EXHAUST DUCTS, ROUND OR RECTANGULAR, MUST BE SEALED AIR TIGHT.
8. CONTRACTOR SHALL COORDINATE AIR CONDITIONING DUCTWORK, PLUMBING, AND SPRINKLER PIPING WITH OTHER TRADES, TO AVOID CONFLICTS AND MAINTAIN EQUIPMENT ACCESS AND SERVICEABILITY TO VALVES AND EQUIPMENT.
9. CONTRACTOR SHALL FURNISH ALL NECESSARY STRUCTURES, INSERTS, SLEEVES, AND HANGING DEVICES FOR INSTALLATION OF MECHANICAL AND PLUMBING EQUIPMENT, DUCTWORK AND PIPING, ETC. CONTRACTOR SHALL COORDINATE INSTALLATION OF SUCH DEVICES WITH GENERAL CONTRACTOR. CONTRACTOR MUST FURTHER VERIFY WITH THE STRUCTURAL ENGINEER THAT THE DEVICES ARE ADEQUATE AS INTENDED AND DO NOT OVERLOAD THE BUILDING'S STRUCTURAL COMPONENTS IN ANY WAY.
11. EQUIPMENT SHALL BE INSTALLED IN ACCORDANCE WITH MANUFACTURER'S RECOMMENDATIONS.
12. PROVIDE ALL NECESSARY FITTINGS FOR RISES AND OFFSETS IN DUCTWORK AND PIPING, WHETHER OR NOT SHOWN, FOR PROPER INSTALLATION. PROVIDE BALANCING DAMPERS AT EACH BRANCH TAKEOFF.
13. DUCT GAUGE AND HANGER SPACING SHALL BE PER SMACNA STANDARDS (DUCT TO BE INSTALLED IN TI PORTION).
15. PROVIDE FIRE/CEILING RADIATION DAMPERS AS REQUIRED IN ALL FIRE RATED DUCT PENETRATIONS. PROVIDE FIRESTOPPING AT ALL FIRE WALL PENETRATIONS. DAMPERS SHALL BE LISTED FOR THE APPLICATION IN WHICH THEY ARE USED.
16. CONTRACTOR SHALL PROVIDE RETURN AIR OR TRANSFER AIR OPENINGS IN CEILING SPACE AT FULL HEIGHT WALLS TO CREATE AND/OR MAINTAIN A RETURN AIR PATH. FIRE/SMOKE DAMPERS SHALL BE PROVIDED IN SUCH OPENINGS WHERE REQUIRED. COORDINATE THE LOCATIONS OF ALL DUCTWORK WITH ANY PLUMBING LINES AND ELECTRICAL CONDUIT.
17. IN THE EVENT THAT ANY DUCT CANNOT BE ROUTED AS SHOWN ON THE CONTRACT DRAWINGS, THE CONTRACTOR SHALL MODIFY THE DUCT AS REQUIRED, MAINTAINING THE SAME NET FREE AREA AS THE DESIGNED DUCT. CONTRACTOR SHALL SUBMIT SHOP DRAWINGS SHOWING THE PROPOSED CHANGES FOR APPROVAL. THIS SHALL BE DONE AT NO COST TO THE OWNER.
18 THERMOSTATS SHALL BE WALL MOUNTED 4'-0" ABOVE FINISHED FLOOR. COORDINATE THE LOCATION OF ALL ROOF AND FLOOR PENETRATIONS WITH EXISTING STRUCTURAL CONDITIONS.
19. FRAME AROUND EACH PENETRATION PER ARCHITECTURAL / STRUCTURAL DRAWINGS.
20. DUCTWORK CONNECTIONS TO ALL AIR HANDLING EQUIPMENT SHALL BE MADE WITH WEATHERPROOF FLEXIBLE CONNECTIONS.
21. INSULATE EXPOSED EXTERIOR DUCTWORK WITH FIBERGLASS DUCTWRAP INSULATION (R8) WITH VAPOR BARRIER, AND COVER WITH 0.016" EMBOSSED ALUMINUM JACKET.
22. INSULATE CONCEALED SUPPLY DUCTWORK WITH PLENUM RATED FIBERGLASS DUCTWRAP INSULATION (R6) WITH VAPOR BARRIER.

EXHAUST FAN SCHEDULE

AMCA CERTIFIED

SYMBOL	MANUFACTURER (OR APPROVED EQUAL)	MODEL	WEIGHT	TYPE	DRIVE	CFM	ESP (IN. W.C.)	FAN RPM	MAX. SOUND LEVEL (SONES)	MOTOR			ACCESSORIES					
										hp	watts	volt/ph/hz	BACKDRAFT DAMPER	VIBRATION ISOLATORS	BIRD SCREEN	DISCONNECT	SPEED CONTROLLER	ROOF CURB
EF-1	GREENHECK	RDU-30-422-VG	250 LBS	ROOF	DIRECT	6650	0.25	1009	26	1	--	460/3/60	●	●	●	●	●	●

1 **MECHANICAL SCHEDULES**
SCALE: **NTS**

COPYRIGHT 2021 MODULUS ARCHITECTS

Tesla Collision Center, Centennial, CO

MODULUS
ARCHITECTS
AND LAND USE
PLANNING
8220 SAN PEDRO DR NE
SUITE 520
ALBUQUERQUE, NEW
MEXICO 87113
PHONE (505) 338-1499
FAX (505) 338-1498

ArSed Engineering Group, LLC.
4700 Lincoln Road, NE | Suite 101 | Albuquerque, NM 87109 | 505.761.3100

COLORADO LICENSED
DANIEL A. VIGIL
54935
PROFESSIONAL ENGINEER
02/13/2024

PROJECT TITLE

TESLA COLLISION CENTER
6951 S. Blackhawk St., BDG 1
Centennial, CO, 80112

PROJECT MANAGER

DRAWN BY:

ISSUE / REVISION

SHEET TITLE
MECHANICAL SCHEDULES

SCALE:
JOB NO. 2000.01

SHEET NUMBER
M1.00

Permit Documents

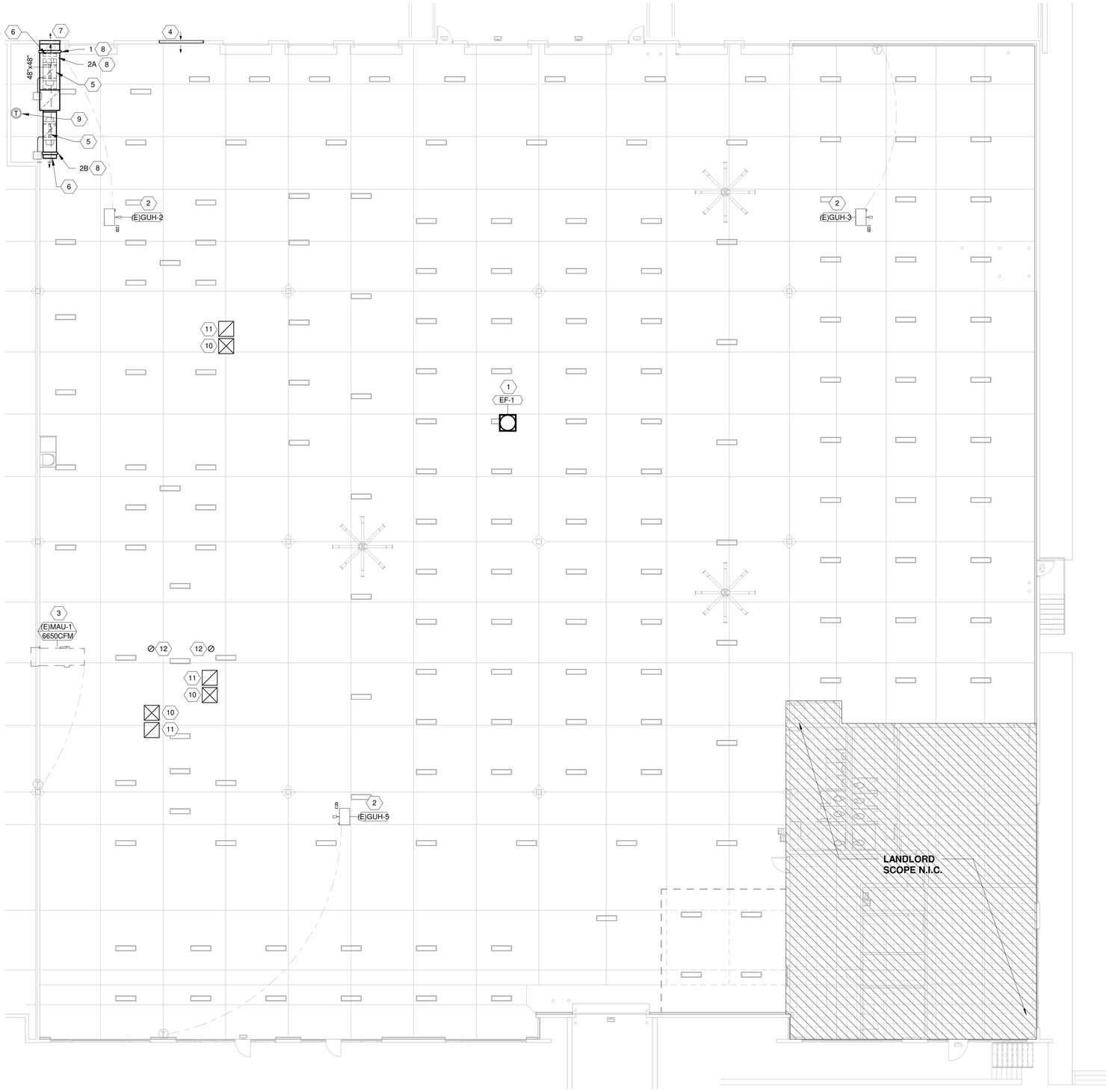

1 **MECHANICAL HVAC PLAN**
SCALE: **3/32" = 1'-0"**

KEYED NOTES:

1. NEW ROOF MOUNTED EXHAUST FAN TO BE INSTALLED LEVEL AND IN ACCORDANCE WITH MANUFACTURER'S RECOMMENDATIONS. INTERLOCK OPERATION TO (E)MUA-1 AND EXISTING WALL LOUVER.
2. EXISTING 400MBH GAS UNIT HEATER TO REMAIN. ADJUST THERMOSTAT POSITION IF NECESSARY FOR NEW LAYOUT.
3. EXISTING 1425MBH MAKE-UP AIR UNIT (E)MUA-1 TO REMAIN. ADJUST SUPPLY DUCT AND CONTROL SWITCH AS NECESSARY FOR NEW LAYOUT. INTERLOCK OPERATION TO EXISTING WALL LOUVER AND NEW EF-1.
4. EXISTING WALL LOUVER TO REMAIN AS IS. INTERLOCK OPERATION TO (E)MUA-1 AND NEW EF-1.
5. CONNECT DUCTWORK TO EXHAUST CONNECTION ON COMPRESSOR WITH 4" FLEXIBLE CONNECTION AND TRANSITION TO 31X31 DUCT AS SHOWN. SEE DETAIL ON SHEET M3.10 FOR ADDITIONAL INFO.
6. OPEN ENDED DUCT WITH MOTORIZED DAMPER. PROVIDE WIRE MESH SCREEN ON END OF DUCT. DAMPER TO BE CONTROLLED BY LINE VOLTAGE THERMOSTAT. SEE DETAIL AND COMPRESSOR ROOM MOTORIZED DAMPER SEQUENCE OF OPERATION ON SHEET M3.00.
7. CONTRACTOR TO PROVIDE NEW 48"X48" RUSKIN L811 LOUVER IN EXTERIOR WALL. INSTALL 18'-0" TO CENTERLINE A.F.F.
8. RUSKIN CD51 LOW LEAKAGE CONTROL DAMPER WITH 120V ACTUATOR. OPEN DAMPER WITH PARALLEL BLADES. DAMPERS TO FAIL OPEN.
9. LINE VOLTAGE THERMOSTAT TO CONTROL DAMPERS IN COMPRESSOR ROOM. SEE DETAIL ON M3.00.
10. APPROXIMATE LOCATION OF AIR INTAKE DUCT FOR PAINT BOOTH. REFER TO PAINT BOOTH PACKAGE FOR EXACT LOCATION, SIZE AND DETAILS.
11. APPROXIMATE LOCATION OF AIR EXHAUST DUCT FOR PAINT BOOTH. REFER TO PAINT BOOTH PACKAGE FOR EXACT LOCATION, SIZE AND DETAILS.
12. APPROXIMATE LOCATION OF MIXING ROOM AIR EXHAUST DUCTS FOR PAINT BOOTH. REFER TO PAINT BOOTH PACKAGE FOR EXACT LOCATION, SIZE AND DETAILS.

MODULUS ARCHITECTS
AND LAND USE PLANNING
8220 SAN PEDRO DR NE
SUITE 520
ALBUQUERQUE, NEW MEXICO 87113
PHONE (505) 338-1499
FAX (505) 338-1498

ArSed Engineering Group, LLC.
4700 Lincoln Road, NE I Suite 101 I Albuquerque, NM 87109 I 505.761.3100

COLORADO LICENSED
GABRIEL A. LONG
54935
PROFESSIONAL ENGINEER
2/13/2024

PROJECT TITLE

TESLA COLLISION CENTER
6951 S. Blackhawk St., BDG 1
CentennialL. CO 80112

PROJECT MANAGER

DRAWN BY:

ISSUE / REVISION

SHEET TITLE

MECHANICAL HVAC PLAN

SCALE:

JOB NO. Project Number

SHEET NUMBER

M1.10

Permit Documents

COPYRIGHT 2021 MODULUS ARCHITECTS
2/13/2024 1:58:24 PM D:\ArSed\23-138 Tesla Collision Colorado\23-138 ENGLEWOOD-TESLA_MP_R24_dtapiat1.rvt
TESLA COLLISION CENTER

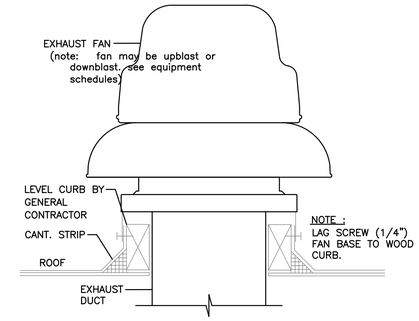

GENERAL EXHAUST FAN DETAIL | SCALE: NONE | 1

COMPRESSOR ROOM MOTORIZED DAMPER SEQUENCE OF OPERATION:

1. UPON START UP OF COMPRESSOR DAMPER 1 SHALL GO TO OPEN POSITION AND DAMPERS 2A AND 2B SHALL REMAIN CLOSED.
2. UPON DROP IN SPACE TEMPERATURE BELOW THERMOSTAT SETPOINT (70 DEGREES) DAMPER 2A AND 2B SHALL OPEN AND DAMPER 1 SHALL CLOSE TO ALLOW HEAT TO ENTER SPACE AND PROVIDE HEATING AS NEEDED. UPON RISE IN SPACE TEMPERATURE ABOVE SET POINT SEQUENCE SHALL REVERSE.
3. WHEN COMPRESSOR IS NOT RUNNING ALL DAMPERS SHALL BE CLOSED.

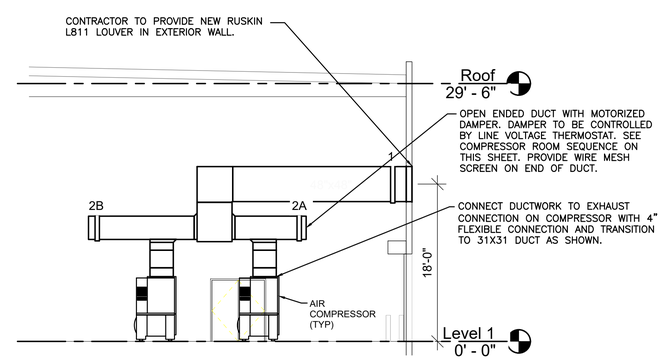

COMPRESSOR ROOM EXHAUST DETAIL | SCALE: 1/4" = 1'-0" | 2

1 **MECHANICAL DETAILS**
SCALE: **NTS**

COPYRIGHT 2021 MODULUS ARCHITECTS

Tesla Collision Center, Centennial, CO

MODULUS
ARCHITECTS
AND LAND USE
PLANNING
8220 SAN PEDRO DR NE
SUITE 520
ALBUQUERQUE, NEW
MEXICO 87113
PHONE (505) 338-1499
FAX (505) 338-1498

ArSed Engineering Group, LLC.
4700 Lincoln Road, NE | Suite 101 | Albuquerque, NM 87109 | 505.761.3100

COLORADO LICENSED
DARREL A. LOWE
54935
PROFESSIONAL ENGINEER
02/13/2024

PROJECT TITLE

TESLA COLLISION CENTER
6951 S. Blackhawk St., BDG 1
Centennial, CO, 80112

PROJECT MANAGER

DRAWN BY:

ISSUE / REVISION

SHEET TITLE

MECHANICAL DETAILS

SCALE:

JOB NO. 2000.01

SHEET NUMBER

M3.00

Permit Documents

PLUMBING SPECIFICATIONS

GENERAL

A. THE GENERAL CONDITIONS OF THE GENERAL SPECIFICATIONS, ALONG WITH ALL APPLICABLE INSTRUCTIONS TO BIDDERS SHALL FORM A PART OF THIS SECTION OF THE SPECIFICATIONS.

B. REFERENCE IS MADE TO REQUISITES FOR BIDDERS AND CONTRACTORS UNDER OTHER SECTIONS OF THESE SPECIFICATIONS, WHICH SHALL BE CONSIDERED BINDING, UNLESS OTHERWISE NOTED UNDER THIS SECTION.

SCOPE

EACH CONTRACTOR SHALL THOROUGHLY ACQUAINT HIMSELF WITH THE CONSTRUCTION DETAILS, BOTH AS ON TENANT CONSTRUCTION DRAWINGS AND LANDLORD'S AS REFERRED TO, BEFORE SUBMITTING HIS BID AS NO ALLOWANCES WILL BE MADE BECAUSE OF THE CONTRACTOR'S UNFAMILIARITY WITH THESE DETAILS. ALL PERFORMANCE OF CONSTRUCTION SHALL BE AS REQUIRED BY THE PACE OF THE GENERAL CONSTRUCTION.

INSPECTION OF SITE

ALL PROPOSALS SHALL PRECLUDE THAT CONTRACTOR IS FAMILIAR WITH JOB SITE CONDITIONS AND UTILITY LOCATIONS AND THE LACK OF SPECIFIC INFORMATION ON THE DRAWINGS SHALL NOT RELIEVE THE CONTRACTOR OF ANY RESPONSIBILITY.

PERMITS

ALL PERMITS AND LICENSES NECESSARY FOR THE PROPER EXECUTION OF THE WORK SHALL BE SECURED AND PAID FOR BY THE SUBCONTRACTOR INVOLVED.

CODE REQUIREMENTS

ALL WORK UNDER THIS CONTRACT SHALL COMPLY WITH THE PROVISIONS OF THE SPECIFICATIONS, DRAWINGS OR AS DIRECTED BY THE OWNER, AND SHALL SATISFY ALL APPLICABLE CODES, ORDINANCES, OR REGULATIONS OF THE GOVERNING BODIES, WHETHER SO SHOWN OR NOT, AND ALL MODIFICATIONS REQUIRED BY SUCH AUTHORITIES SHALL BE MADE BY THE CONTRACTOR WITHOUT ANY ADDITIONAL COST TO THE OWNER.

MATERIALS AND WORKMANSHIP

A. ALL MANUFACTURED ARTICLES, MATERIALS, AND EQUIPMENT SHALL BE APPLIED AS RECOMMENDED BY THE MANUFACTURERS, AND UNLESS OTHERWISE SPECIFIED SHALL BE NEW, AND FREE FROM ANY DEFECTS. ALL LIKE MATERIALS USED SHALL BE OF THE SAME MANUFACTURE AND QUALITY UNLESS OTHERWISE SPECIFIED.

B. ALL WORK UNDER THIS CONTRACT SHALL BE PERFORMED BY COMPETENT WORKMEN AND EXECUTED IN A NEAT AND WORKMANLIKE MANNER. WORK SHALL BE PROPERLY PROTECTED DURING CONSTRUCTION, AND ON COMPLETION, THE INSTALLATION SHALL BE THOROUGHLY CLEANED AND ALL DEBRIS PRESENT AS A RESULT OF THIS CONTRACT SHALL BE REMOVED FROM THE PREMISES, DO NOT JUST ABANDON.

CODES AND REGULATIONS

EACH SUBCONTRACTOR SHALL COMPLY WITH ALL LAWS, ORDINANCES, RULES AND REGULATIONS BEARING ON THE CONDUCT OF THE WORK AS DRAWN OR SPECIFIED. IF A SUBCONTRACTOR OBSERVES THAT THE DRAWINGS AND SPECIFICATIONS ARE AT A VARIANCE, HE SHALL PROMPTLY NOTIFY THE GENERAL CONTRACTOR AND THE TENANT IN WRITING. IF ANY SUBCONTRACTOR PERFORMS ANY WORK KNOWING IT TO BE CONTRARY TO LAWS, ORDINANCES, RULES AND REGULATIONS AND WITHOUT GIVING SUCH NOTICE, THE SUBCONTRACTOR SHALL BEAR ALL COSTS ARISING THEREFROM.

PROTECTION OF WORK AND PROPERTY

A. EACH SUBCONTRACTOR SHALL CONTINUOUSLY MAINTAIN ADEQUATE PROTECTION OF ALL HIS WORK FROM DAMAGE AND SHALL PROTECT THE OWNER'S PROPERTY FROM INJURY OR LOSS ARISING FROM HIS WORK. HE SHALL MAKE GOOD ANY SUCH DAMAGE, INJURY, OR LOSS, EXCEPT SUCH AS MAY BE DIRECTLY DUE TO CAUSES BEYOND HIS CONTROL AND NOT TO HIS FAULT OR NEGLIGENCE. HE SHALL ADEQUATELY PROTECT ADJACENT PROPERTY AS WELL.

B. EACH SUBCONTRACTOR SHALL TAKE ALL NECESSARY PRECAUTIONS FOR THE SAFETY OF THEIR EMPLOYEES ON THE WORK AND SHALL COMPLY WITH ALL PROVISIONS OF FEDERAL, STATE AND LOCAL BUILDING CODES AND SAFETY LAWS TO PREVENT ACCIDENTS OR INJURY TO PERSONS ON OR ADJACENT TO THE PREMISES WHERE THE WORK IS BEING PERFORMED. EACH SUBCONTRACTOR SHALL MAINTAIN ALL INSURANCE REQUIRED TO PROTECT HIMSELF, OWNER AND TENANT FOR THE DURATION OF THE WORK AGAINST PROPERTY DAMAGE AND PUBLIC LIABILITY.

CHANGES IN THE WORK

THE TENANT, WITHOUT INVALIDATING THE CONTRACT, MAY ORDER EXTRA WORK OR MAKE CHANGES BY ALTERING, ADDING TO OR DEDUCTING FROM THE WORK, THE CONTRACT SUM BEING ADJUSTED ACCORDINGLY.

COOPERATION

ALL WORK UNDER THESE SPECIFICATIONS SHALL BE ACCOMPLISHED IN CONJUNCTION WITH OTHER CONTRACTORS AND TRADES OF THIS PROJECT IN A MANNER WHICH WILL ALLOW EACH CONTRACTOR AND TRADE ADEQUATE TIME AT THE PROPER STAGE OF CONSTRUCTION TO FULFILL HIS CONTRACTS. REFERENCE SHALL BE MADE TO THE OWNER FOR INSTRUCTIONS SHOULD ANY QUESTIONS ARISE BETWEEN TRADES AS TO THE PLACING OF LINES, DUCTS, CONDUITS, FIXTURES, OR EQUIPMENT, OR SHOULD IT APPEAR DESIRABLE TO REMOVE ANY GENERAL CONSTRUCTION WHICH WOULD AFFECT THE APPEARANCE OR STRENGTH OF THE STRUCTURE.

SUBSTITUTION OF MATERIALS

MANUFACTURER'S NAMES ARE LISTED HEREIN TO ESTABLISH A STANDARD. THE PRODUCTS OF OTHER MANUFACTURERS WILL BE ACCEPTABLE, IF IN THE OPINION OF THE OWNER OR OWNERS REPRESENTATIVE THRU A SUBMITTAL PROCESS, THE SUBSTITUTE MATERIAL IS OF A QUALITY AS GOOD OR BETTER THAN THE MATERIAL SPECIFIED, AND WILL SERVE WITH EQUAL EFFICIENCY AND DEPENDABILITY, THE PURPOSE FOR WHICH THE ITEMS SPECIFIED WERE INTENDED.

SHOP DRAWINGS

SHOP DRAWINGS AND CATALOG DATA ON ALL MAJOR ITEMS OF EQUIPMENT AND SYSTEMS, AND SUCH OTHER ILLUSTRATIVE MATERIAL AS MAY BE CONSIDERED NECESSARY BY THE TENANT, SHALL BE SUBMITTED BY THIS CONTRACTOR IN ADEQUATE TIME TO PREVENT DELAY AND CHANGES DURING CONSTRUCTION.

DRAWINGS AND SPECIFICATIONS

A. THE DRAWINGS SHOW DIAGRAMMATICALLY THE LOCATIONS OF THE VARIOUS LINES, DUCTS, CONDUITS, FIXTURES, AND EQUIPMENT AND THE METHOD OF CONNECTING AND CONTROLLING THEM. IT IS NOT INTENDED TO SHOW EVERY CONNECTION IN DETAIL AND ALL FITTINGS REQUIRED FOR A COMPLETE SYSTEM.

B. SHOULD ANY CHANGES BE DEEMED NECESSARY BY THE CONTRACTOR IN ITEMS SHOWN ON CONTRACT DRAWINGS, THE SHOP DRAWINGS, DESCRIPTIONS, AND THE REASON FOR THE PROPOSED CHANGES SHALL BE SUBMITTED TO THE OWNER FOR APPROVAL.

RESPONSIBILITY

A. THE CONTRACTOR WILL BE HELD RESPONSIBLE FOR THE SATISFACTORY AND COMPLETE EXECUTION OF ALL WORK INCLUDED IN HIS CONTRACT. HE SHALL PRODUCE COMPLETE FINISHED OPERATING SYSTEMS AND PROVIDE ALL INCIDENTAL ITEMS REQUIRED AS PART OF HIS WORK, REGARDLESS OF WHETHER SUCH ITEM IS PARTICULARLY SPECIFIED OR INDICATED.

GENERAL PROVISIONS

1. SCOPE: PROVIDE ALL LABOR, MATERIAL, AND EQUIPMENT IN ACCORDANCE WITH THESE SPECIFICATIONS AND THE ACCOMPANYING DRAWINGS TO PROVIDE A COMPLETE AND PROPERLY OPERATING PLUMBING SYSTEM FOR THE BUILDING.

   OBTAIN WATER, SEWER, GAS TAPS, AND ANY OTHER REQUIRED UTILITIES AND EXTEND SERVICE FROM SAME TO BUILDING AS SHOWN ON DRAWINGS. VISIT THE SITE FOR UNDERSTANDING OF THE WORK TO BE DONE BEFORE SUBMITTING BID.

   COORDINATE THIS WORK WITH THE WORK OF THE OTHER TRADES ON THE PROJECT. ALL PLUMBING IS TO BE ROUGHED IN WHILE THE BUILDING IS BEING CONSTRUCTED AT SUCH TIMES AS NOT TO DELAY THE GENERAL CONTRACTOR ON THE BUILDING.

2. GENERAL REQUIREMENTS: COMPLY WITH ALL FEDERAL, STATE, AND LOCAL REQUIREMENTS, CODES, RULES, AND ORDINANCES GOVERNING WORK OF THIS CHARACTER. PAY FOR AND OBTAIN NECESSARY CONSTRUCTION PERMITS AND CERTIFICATES OF INSPECTION.

   A. DRAWINGS: THE LOCATION OF THE PIPING RUNS ARE APPROXIMATE AND THE CONTRACTOR MUST MAKE ANY NECESSARY CHANGES IN THE PIPING RUNS, ETC., AT NO ADDITIONAL COST TO THE OWNER. OUTLET LOCATIONS ARE CRITICAL AND MUST BE LOCATED EXACTLY ACCORDING TO THE PLUMBING PLAN. COORDINATE THIS WORK WITH THE INSTALLERS OF EQUIPMENT FURNISHED AND INSTALLED BY OTHERS. REFER TO THE OTHER DRAWINGS FOR DETAILS OF THE BUILDING CONSTRUCTION AND THE OTHER MECHANICAL, ELECTRICAL, AND EQUIPMENT FEATURES.

   B. COORDINATION AND WORKMANSHIP: SCHEDULE THIS WORK SO THAT IT WILL BE PROPERLY COORDINATED WITH ALL OTHER TRADES. WORKMANSHIP SHALL BE IN ACCORDANCE WITH THE BEST PRACTICE FOR THE CLASS OF WORK INVOLVED. WORKMANSHIP SHALL ALLOW THE APPLIANCE TO OPERATE AS INTENDED AND BE INSTALLED TO BEST PROTECT THE PUBLIC AND OPERATORS FROM INJURY OR DAMAGE, AND TO PRESENT A NEAT, PLEASING, AND ORDERLY APPEARANCE.

MATERIALS AND PERFORMANCE

1. MATERIALS:
   ALL MATERIALS SHALL BE NEW AND OF THE QUALITY INDICATED BY THE SPECIFIED BRAND NAMES. SUBSTITUTIONS OF MATERIAL OF EQUAL QUALITY BY OTHER FIRST-LINE MANUFACTURERS MAY BE ACCEPTABLE PROVIDED A LIST OF SUCH SUBSTITUTIONS IS APPROVED IN WRITING. A SUBSTITUTIONS LIST SHALL BE SUBMITTED IN TRIPLICATE WITHIN FIVE (5) DAYS AFTER THE CONTRACT IS LET.

2. BACKFILLING:
   PERFORM ALL NECESSARY EXCAVATING AND BACKFILLING REQUIRED FOR THIS INSTALLATION. PREPARE A PROPER BED OF SAND OR GRAVEL OR EQUIVALENT IN ROCK SCREENINGS SO AS TO ELIMINATE SHIMMING AND VOID SPACES UNDER ANY OF THE UTILITY SERVICE PIPES. BENDING OF ANY HARD PIPE WILL NOT BE PERMITTED. WHERE A CHANGE IN DIRECTION IS NECESSARY ON PRESSURE PIPES, "COMPATIBLE" COUPLINGS OR EQUAL SHALL BE USED AND BENDS MAY NOT EXCEED 9O DEGREES. ALL EXCAVATION BELOW THE BOTTOM OF FOOTINGS SHALL BE BACKFILLED WITH 2000 PSI CONCRETE. OTHER BACKFILL SHALL CONSIST OF 2-3" OF SAND OR ROCK SCREENINGS AND EARTH TO A FINAL LEVEL EQUAL TO ITS ORIGINAL CONDITION. IN THE EVENT THE BACKFILL SHOULD SETTLE BEFORE THE FINAL TOP SURFACE IS APPLIED, APPLY ADDITIONAL BACKFILL TO SUSTAIN THE ORIGINAL LEVEL. CARE SHOULD BE TAKEN TO MINIMIZE THE DUST LEVEL WHEN EXCAVATING AND BACKFILLING SO AS TO COMPLY WITH FEDERAL AND STATE E.P.A. REGULATIONS RELATING TO THIS TYPE OF WORK (FUGITIVE DUST).

3. PIPING INSTALLATION:
   CLEAN-OUTS MUST BE INSTALLED ON MINIMUM DROP LINES EVEN THOUGH NOT SHOWN ON THE BLUEPRINTS. USE REDUCING FITTINGS IN MAKING REDUCTIONS IN SIZE OF PIPE. REAM ALL PIPE AFTER CUTTING, THEN TURN PIPES ON END AND KNOCK OUT ALL LOOSE DIRT AND SCALE BEFORE INSTALLING. MAKE CHANGES IN HORIZONTAL DIRECTION OF SOIL AND WASTE PIPES WITH LONG RADIUS FITTINGS OR WITH "Y" BRANCHES AND 1/8 OR 1/16 BENDS. CONNECT SOIL STACKS AT BASE TO HORIZONTAL RUNS WITH "Y" CONNECTIONS.

   WATER SUPPLY PIPES TO FIXTURES AND WASTE PIPES FROM FIXTURES SHALL BE CENTERED IN THE PROPER PLACE RELATIVE TO THE CENTER LINE OF THE FIXTURE. NO OFFSETS WILL BE ALLOWED. ALL PIPES SHALL BE RUN MECHANICALLY STRAIGHT AND SQUARE WITH BUILDING LINES, EXCEPT FOR REQUIRED PITCH ON HORIZONTAL LINES, AND ALL CHANGES IN DIRECTION SHALL BE MADE WITH FITTINGS. WATER PIPING TO BE ROUTED IN WALLS, UNDER THE FLOOR SLAB, AND ABOVE SUSPENDED CEILINGS AS NOTED. WHERE WATER LINES ARE ROUTED UNDER THE FLOOR SLAB, NO MECHANICAL JOINTS SHALL BE MADE UNDER THE SLAB EXCEPT AS LISTED BELOW. WATER PIPING SHALL BE INSTALLED NOT TO EXERT VERTICAL NOR HORIZONTAL STRESSES ON THE SEATING OF UNIONS. UNIONS SHALL BE COPPER TYPE NIBCO # 733 OR EQUAL. PROVIDE AIR CHAMBER TYPE WATER HAMMER ARRESTORS OR ACCEPTABLE FACTORY MANUFACTURED SUBSTITUTES AT ALL WATER ROUGH-IN LOCATIONS.

   NO WAX, PUTTY, OR VARNISH WILL BE PERMITTED. CRACKED FITTINGS SHALL BE REMOVED AND REPLACED WITH NEW FITTINGS. MAKE THREADED JOINTS IN BRASS PIPE AND FITTINGS WITH PIPE THREADING TO THE SHOULDER OF THE FITTINGS. NO SLIP JOINTS OR COUPLING JOINTS IN BRASS PIPE WILL BE PERMITTED, EXCEPT ON THE FIXTURE SIDE OF THE TRAP.

4. NATURAL GAS PIPING:
   FOR ABOVEGROUND INSTALLATIONS, ALL FITTINGS TO BE JOINED WITH TEFLON TAPE SEAL OR OTHER SUITABLE SEAL AND MADE IN CONFORMANCE WITH THE BEST PRACTICES OF AGA AND NFPA 54. UNIONS SHALL BE CAST BLACK IRON AND INSTALLED IN A MANNER SUCH THAT NO STRESS WILL BE PLACED ON THE MALE-FEMALE SEALING SURFACES. PROPER ALIGNMENT WILL BE MADE AT TIME OF INSTALLATION. ALL JOINTS AND CONNECTIONS SHALL BE THOROUGHLY CLEANED OF OIL, THREAD CUTTINGS AND RESIDUALS TO ACCEPT ENAMEL PAINT. ROUGH OR SHARP EXPOSED THREAD SURFACES SHALL BE FILED SMOOTH.

5. WATER PIPE:
   JOINTS SHALL BE CLEANED AND DEBURRED AS RECOMMENDED BY THE MANUFACTURER AND FEDERAL, STATE, AND LOCAL CODES AND SOLDERED AS LISTED BELOW. FLUX SHALL BE NON-CORROSIVE.

   ABOVE GRADE - WHERE FITTINGS ARE SOLDERED BOTH FITTINGS AND TUBING SHALL BE CLEANED AS DESCRIBED ABOVE. UNDER NO CIRCUMSTANCES SHALL DISSIMILAR METALS COME INTO DIRECT CONTACT WITH COPPER TUBING; E.G., GALVANIZED STRAPPING, HANGERS, OR CLAMPS TO SECURE THE TUBING.

   BELOW GRADE, OR FLOOR SLAB ON EARTH OR STONE FILL - HIGH TEMPERATURE, SOLDER, 1200 DEG. F OR GREATER MELTING POINT.

   NOTE: WATER PIPE TO BE PROPERLY SECURED AND ALIGNED SO AS NOT TO EXERT VERTICAL OR HORIZONTAL STRESSES ON THE SEATING OF THE MATING (MALE AND FEMALE) SURFACES OF THE UNIONS.

   A. MATERIALS - UNDERGROUND: TYPE "L" COPPER TUBE, SOFT TEMPER

   B. MATERIALS - ABOVEGROUND: TYPE "L" COPPER TUBE, HARD DRAWN.

   C. INSULATION: INSULATION FOR COLD WATER PIPING SHALL BE 1/2". INSULATION FOR HOT WATER AND HOT WATER RE-CIRCULATION SHALL BE 1 1/2" THICK FOR PIPE SIZES 1" TO 2" AND 1" THICK FOR PIPE SIZES 3/4" AND SMALLER. INSULATION SHALL BE ARMSTRONG ARMAFLEX UL LABELED OR FIBERGLASS 25 WITH ASJ/SSL FOIL/VINYL JACKET OR EQUAL HAVING A CONDUCTIVITY RANGE OF 0.22-0.25. INSULATE ALL PIPING AND FITTINGS.

6. GAS PIPING
   A. UNDERGROUND GAS PIPING: ASTM A53, SCHEDULE 40 BLACK STEEL PIPE WITH LONG RADIUS STEEL WELDING FITTINGS INCLUDING CATHODIC PROTECTION OR POLYETHYLENE AS APPROVED BY LOCAL GAS COMPANY AND AUTHORITY HAVING JURISDICTION.

   B. GAS PIPING ABOVE GROUND: ASTM A53, SCHEDULE 40 BLACK STEEL WITH 125 POUND BLACK MALLEABLE IRON SCREWED FITTINGS. INSTALL MOISTURE TRAPS ON HVAC UNITS, WATER HEATER, AND KITCHEN EQUIPMENT.
   C. GAS PIPING COMPOUND AT JOINTS; IN COMPLIANCE WITH NFPA BULLETIN #54 AND LOCAL APPLICABLE CODES AND SUITABLE FOR NATURAL GAS SERVICE.

7. WASTE PIPING:
   INSTALL HORIZONTAL DRAIN AND WASTE PIPES WITH 1/4"/FT. SLOPE.

   MATERIALS:
   INTERIOR SOIL, WASTE AND VENT PIPING SHALL BE PVC SCH. 40 PIPING FOR SANITARY WASTE IN LIEU OF CAST IRON WHERE ALLOWED BY AUTHORITY HAVING JURISDICTION. PIPING SHALL NOT BE EXPOSED IN PLENUMS OR THE OPEN CEILING AREA IN THE DINING ROOM, CAST IRON - HUB TYPE WITH NEOPRENE JOINTS - WITH STAINLESS STEEL CONNECTORS WHEN PVC IS NOT ALLOWED PER LOCAL CODE. ALTERNATE BID ITEM CAST IRON NO HUB AND FITTINGS, WRAPPED WITH 3 MIL. PLASTIC, OR A.B.S. PIPING, BELOW SLAB OR GRADE ONLY, IF APPROVED BY LOCAL ADMINISTRATIVE AUTHORITY. INDIRECT WASTE PIPING TO BE IN COOLER/FREEZER, 3 COMPARTMENT SINK AND PREP SINK TO BE COPPER LINES FOR INDIRECT CONNECTION TO FLOOR SINK, CONDENSATE PIPING TO BE PVC.

   EXTERIOR SOIL, WASTE AND VENT PIPING SHALL BE PVC C-900 PIPE SHALL BE PUSH-ON TYPE, WITH BELLS, SPIGOTS AND ELASTOMERIC GASKETS, IN ACCORDANCE WITH AWWA C900 AND AWWA C905, LATEST REVISIONS. NOMINAL LAID LENGTH OF PVC C900, PIPE SHALL BE 20 FEET. C900 PVC PIPE SHALL BE IMPREGNATED WITH GREEN PIGMENT AND DOUBLE LABELED (180 DEGREES APART) WITH THE FOLLOWING AT INTERVALS OF NOT MORE THAN FIVE (5) FEET: DATE OF MANUFACTURE - MANUFACTURER'S NAME & RECORD CODE - NOMINAL SIZE - "(CL)" - "PVC" – "DIMENSION RATIO (FOR EXAMPLE "DR25")" – "AWWA PRESSURE CLASS (FOR EXAMPLE "PC100")— "AWWA DESIGNATION NUMBER (ANSI/AWWA C900-97)".

   DUCTILE IRON PIPES (DIP): DUCTILE IRON SANITARY SEWER PIPE SHALL BE MINIMUM CLASS 53 FOR 6-INCH, CLASS 52 FOR 8-INCH THROUGH 15 INCH SIZES, CONFORMING TO LATEST REVISIONS OF ANSI/AWWA STANDARDS C151/A21.51. ALL DUCTILE IRON PIPES SHALL BE LINED INTERNALLY WITH 40 MILS PROTECTO 401 CERAMIC EPOXY, OR EQUIVALENT. ALL DUCTILE IRON PIPES SHALL BE PUSH ON RUBBER GASKET JOINTED.

   FITTINGS: SHALL MATCH THE MATERIAL USED FOR MAINS.
   SERVICE LATERAL CONNECTIONS SHALL BE WATER TIGHT AND NOT PROTRUDE INTO THE SEWER MAIN. A SANITARY WYE BRANCH CONNECTION, 6 INCH DIAMETER OR LARGER, SHALL BE USED TO CONNECT LOW DENSITY RESIDENTIAL PROPERTIES TO THE MAIN. ALL OTHER SERVICES SHALL USE A MINIIUM 8 INCH DIAMETER CONNECTION AND SHALL TIE THROUGH A NEW MANHOLE AT THE MAIN. A SADDLE TYPE WYE CONNECTION SHALL NOT BE USED. VITRIFIED CLAY PIPE MAINS SHALL BE LINED OR REPLACED PRIOR TO CONNECTING A NEW SERVICE LATERAL TO IT. ALL MATERIALS USED TO MAKE SERVICE CONNECTIONS SHALL BE COMPATIBLE WITH EACH OTHER AND WITH THE PIPE MATERIALS TO BE JOINED AND SHALL BE CORROSION PROOF.

8. PIPE SLEEVES/ESCUTCHEONS:
   PROVIDE CHROME-PLATED ESCUTCHEONS ON ALL PIPES PASSING THROUGH WALLS, FLOORS, OR CEILINGS OF FINISHED ROOMS. ESCUTCHEONS TO BE BEATON & CADWELL, #10, 40, 6A OR EQUIVALENT WITH SET-SCREWS. PROVIDE ESCUTCHEONS ON ALL WASTE LINES FROM PLUMBING FIXTURES, WHETHER THROUGH WALLS, FLOORS, AND WHETHER CONCEALED BEHIND COUNTERS OR EXPOSED. PIPE SLEEVES SHALL BE PROVIDED WHEN PIPES PENETRATE FOUNDATION AND SHALL BE 1" LARGER THAN PIPE, SEAL SLEEVE W/CAULKING.

9. PLUMBING FIXTURES:
   FURNISH AND INSTALL PLUMBING FIXTURES AS SHOWN ON DRAWINGS WITH ALL ACCESSORIES AND TRIM AS LISTED. PROVIDE ANGLE STOP VALVES AND ESCUTCHEON PLATE FOR ALL FINAL WATER CONNECTIONS. ALL FIXTURES SHALL BE PROTECTED THROUGH THE COURSE OF THE CONSTRUCTION. ANY FIXTURE DAMAGED SHALL BE REPLACED WITHOUT ADDITIONAL EXPENSE TO THE OWNER.

10. CONNECTION TO OTHER FIXTURES:
    CONNECT BUILDING SERVICE PIPING, INCLUDING BUT NOT LIMITED TO WATER, DRAIN, AND GAS PIPES TO FOOD SERVICE EQUIPMENT AS INDICATED IN EQUIPMENT SPECIFICATIONS. PROVIDE BACKFLOW PROTECTION ON ICE MACHINES AND BEVERAGE EQUIPMENT SUPPLY CONNECTIONS.

11. TESTS:
    A. DRAINAGE AND VENT PIPING - DRAINAGE AND VENT PIPING SHALL BE TESTED BEFORE THE PLUMBING FIXTURES ARE INSTALLED BY CAPPING THE OPENINGS AND FILLING THE ENTIRE SYSTEM WITH WATER AND ALLOWING IT TO STAND THUS FILLED NOT LESS THAN ONE (1) HOUR. INSPECT WATER LEVEL TO DETERMINE IF PIPING IS TIGHT.
    B. WATER PIPING - THE WATER SUPPLY PIPING LINES SHALL BE TESTED BEFORE THE PLUMBING FIXTURES ARE CONNECTED BY FILLING THE ENTIRE SYSTEM WITH POTABLE WATER AND APPLYING HYDROSTATIC PRESSURE OF 100 PSI AND ALLOWING TO STAND FOR NOT LESS THAN FOUR (4) HOURS AT THIS PRESSURE TO PROVE PLUMBING INTEGRITY.
    C. GAS PIPING - IN LIEU OF LOCAL REQUIREMENTS, GAS PIPING SHALL BE FILLED WITH COMPRESSED AIR TO 150 PSI AND HELD FOR A PERIOD OF FOUR (4) HOURS. EACH JOINT SHALL BE CHECKED BY LIQUID SOAP OR SPECIAL LIQUID CHEMICAL FOR LEAKS.
    NOTE: REMOVE ALL GAS VALVES AND PROTECT FROM DAMAGE BEFORE TESTING SYSTEM.

12. DISINFECTION OF POTABLE WATER SYSTEM:
    UPON COMPLETION OF INSTALLATION DISINFECT THE WATER SYSTEM BY FILLING IT WITH SOLUTION CONTAINING 50 PARTS PER MILLION OF CHLORINE AND ALLOW IT TO STAND FOR NOT LESS THAN SIX (6) HOURS BEFORE FLUSHING THOROUGHLY AND RETURNING TO SERVICE. FURNISH CLEAN WATER SAMPLES TO THE LOCAL AUTHORITY FOR TESTING AFTER THE LINES HAVE BEEN DISINFECTED. THIS PROCEDURE TO BE IN ACCORDANCE WITH STATE PLUMBING CODE.

13. CLEANUP:
    CLEAN ALL PLUMBING FIXTURES AND EQUIPMENT THOROUGHLY BEFORE FINAL INSPECTION, LEAVING ALL READY FOR USE.

14. GUARANTEE:
    MATERIALS AND WORKMANSHIP SHALL BE GUARANTEED FOR ONE (1) YEAR FROM DATE OF FINAL ACCEPTANCE. DEFECTIVE WORK AND ALL DAMAGES CAUSED THEREBY WHICH MAY OCCUR DURING THE TERM OF THE AFOREMENTIONED GUARANTEE WILL BE REPAIRED AND/OR REPLACED AT NO EXPENSE TO THE OWNER.

15. OWNER'S MANUAL:
    PROVIDE THE OWNER, AT THE COMPLETION OF THIS CONTRACT, WITH AN "OWNER'S MANUAL" SO LABELED. THE MANUAL SHALL CONSIST OF A THREE-RING LOOSE-LEAF BINDER CONTAINING ALL PRINTED MATTER SUCH AS: GUARANTEE CARDS, CLEANING INSTRUCTIONS, NOTICES TO OWNER, OPERATING MANUALS, AND MAINTENANCE INSTRUCTIONS THAT MAY BE CONTAINED IN THE SHIPPING CARTONS OR EQUIPMENT HOUSINGS.

PLUMBING LEGENDS

SS	SANITARY SEWER LINE	EWC	ELECTRIC WATER COOLER
ST	STORM SEWER LINE	MS	MOP SINK
GW	GREASE WASTE LINE	LAV	LAVATORY
	VENT LINE	UR	URINAL
	COLD WATER SUPPLY LINE	WC	WATER CLOSET
	HOT WATER SUPPLY LINE	AFF	ABOVE FINISHED FLOOR
	HOT WATER RECIRCULATION LINE	BFF	BELOW FINISHED FLOOR
	FILTERED WATER	EWH	ELECTRIC WATER HEATER
	THERMOSTATIC MIXING VALVE	GWH	GAS WATER HEATER
	SHUT–OFF VALVE	FD	FLOOR DRAIN
	CHECK VALVE	FS	FLOOR SINK
VTR	VENT THRU ROOF	GW	GREASE WASTE
CI	CAST IRON	SS	SANITARTY SEWER
FCO	FLOOR CLEAN OUT	M	WATER METER
WCO	WALL CLEAN OUT		FLOOR DRAIN
T.P.R.V.	TEMP. PRESSURE RELIEF VALVE		FLOOR SINK
	POINT OF CONNECTION	ECO	EXTERIOR CLEAN OUT

PLUMBING CONTRACTOR'S NOTES

ALL OF THE PLUMBING/PIPING WORK IS NOT NECESSARILY SHOWN OR NOTED ON THESE DRAWINGS. THE CONTRACTORS SHALL VISIT THE JOB SITE AND FIELD VERIFY ALL EXISTING CONDITIONS RELATED TO THE WORK PRIOR TO BIDDING. THOSE ITEMS NOT SHOWN OR NOTED BUT WHICH ARE DEEMED NECESSARY FOR REMOVAL OR RELOCATION BY OWNER OR HIS REPRESENTATIVE SHALL BE PART OF HIS CONTRACT. THE SUBMISSION OF THE PROPOSALS SHALL BE CONSIDERED EVIDENCE THAT THE CONTRACTORS HAVE VISITED THE SITE. NO EXTRA PAYMENTS WILL BE ALLOWED THESE CONTRACTRACTORS ON ACCOUNT OF EXTRA WORK MADE NECESSARY BY HIS FAILURE TO VISIT THE JOB SITE.

FIXTURE UNIT CALCULATIONS:

DESCRIPTION	QUANTITY	F.U. EA		F.U. TOTAL		WASTE F.U. EA	WASTE F.U. TOTAL
		CW	HW	CW	HW		
HOSE BIBB	2	2.50	2.50	5.00	5.00	–––	–––
3" FLOOR DRAIN	1	–––	–––	–––	–––	4.00	4.00
TOTAL FIXTURE COUNT	8			12.50	9.50		16.00

COLD WATER SYSTEM
- 28 GPM REQUIRED
- 1 1/2" SERVICE LINE

HOT WATER SYSTEM
- 7 GPM REQUIRED
- SEE DWGS FOR LINE SIZES

COLD WATER DEMAND:	28 GPM
HOT WATER DEMAND:	7 GPM

WASTE SIZE: 3" REQUIRED

PLUMBING FIXTURE SCHEDULE **

FIXTURE DATA			CONNECTION DATA						REMARKS
FIXTURE	MFG.	CATALOG NO.	COLOR	SOIL SIZE	VENT SIZE	TRAP	WATER COLD	WATER HOT	
ELECTRIC WATER HEATER (EWH)	A O SMITH	DEL–30	–––	–––	–––	–––	3/4"	3/4"	3000 WATT UPPER AND LOWER ELEMENTS WIRED FOR SIMULTANEOUS OPERATION @ 480V/3P, SET OUTLET TEMPERATURE AT 110° F. PROVIDE ALUMINUM DRIP PAN, PIPE T&P VALVE FULL SIZE TO MOP BASIN AND DISCHARGE WITH CODE APPROVED AIR GAP
HOSE BIBB (P146)	CHICAGO FAUCET	387–CP	–––	–––	–––	–––	3/4"	3/4"	INSIDE SILL FAUCET, 2 1/4" TEE HANDLE (293–006LKRCF), SLOW COMPRESSION OPERATING CARTRIDGE, LEFT HAND (217–XTKHJKABNF), 3/4" MALE HOSE THREAD, POLISHED CHROME FINISH. PROVIDE 3, TWO FOR COLD AND ONE FOR HOT WATER CONNECTIONS
SAND/OIL INTERCEPTOR (SOI)	STRIEM	OS–75	–––	3"	3"	–––	–––	–––	4" PLAIN END INLET/OUTLET, 3" PLAIN END VENT, MAX FLOW RATE: 50 GPM, CAPACITIES" LIQUID; 110 GALLONS, OIL: 27.5 GALLONS, SAND: 11 GALLONS, HIGHWAY RATED MANHOLE COVER, 16,000 LB CAPACITY, PROVIDE MANHOLE EXTENSIONS AS REQUIRED.
SAMPLING PORT (SP)	STRIEM	INSPECTOR–4	–––	4"	3"	–––	–––	–––	4" PLAIN END INLET/OUTLET, POLYETHYLENE, HIGHWAY RATED MANHOLE COVER, 16,000 LB CAPACITY, PROVIDE MANHOLE EXTENSIONS AS REQUIRED.
FLOOR DRAIN (P140)	ZURN	FD–2321 –ST–CP	–––	3"	1 1/2"	3"	–––	–––	LOW PROFILE FINISHED AREA FLOOR DRAIN, CAST IRON BODY. FURNISH TRAP PRIMER CONNECTION, CHROME PLATED STRAINER
TRENCH DRAIN GRATE (TDG)	ZURN	Z706–DGE–USA	–––	–––	–––	–––	–––	–––	6" WIDE REVEAL FRAME AND GRATE SYSTEM, DUCTILE IRON SLOTTED GRATE, CLASS 'C'. CONTRACTOR TO VERIFY SIZE OF CONCRETE OPENING PRIOR TO ORDERING.
TRENCH DRAIN (TD)	J R SMITH	9940	–––	3"	–––	–––	–––	–––	6" WIDE POLYPROPYLENE WITH UV INHIBITORS TO COATED STEEL FRAME WITH CHANNELS CONNECTED WITH 1 1/4" OVERLAP JOINT, BUILT–IN GRATE. LENGTH AS INDICATED ON PLANS.
FLOOR CLEANOUT (FCO)	ZURN*	Z1400–K	–––	4"	–––	4"	–––	–––	ADJUSTABLE FLOOR CLEANOUT, DURA COATED CAST IRON BODY WITH ANCHOR FLANGE, GAS AND WATER TIGHT TAPERED THREAD PLUG AND ROUND SCORIATED CAST IRON HEAVY DUTY SECURED TOP
TWO–WAY CLEANOUT (TWCO)	ZURN*	Z1400–K	–––	4"	–––	4"	–––	–––	ADJUSTABLE FLOOR CLEANOUT, DURA COATED CAST IRON BODY WITH ANCHOR FLANGE, GAS AND WATER TIGHT TAPERED THREAD PLUG AND ROUND SCORIATED CAST IRON HEAVY DUTY SECURED TOP

* OR APPROVED EQUAL
** SEE ARCHITECTURAL DRAWINGS A6.02 AND A6.03 FOR ADDITIONAL SPECIFICATIONS ON PLUMBING FIXTURES

COPYRIGHT 2021 MODULUS ARCHITECTS

Tesla Collision Center, Centennial, CO

TESLA

MODULUS ARCHITECTS AND LAND USE PLANNING
8220 SAN PEDRO DR NE
SUITE 520
ALBUQUERQUE, NEW MEXICO 87113
PHONE (505) 338-1499
FAX (505) 338-1498

ArSed Engineering Group, LLC.
4700 Lincoln Road, NE | Suite 101 | Albuquerque, NM 87109 | 505.761.3100

COLORADO LICENSED PROFESSIONAL ENGINEER
GABRIEL A. LOWE
54935
02/13/2024

PROJECT TITLE

TESLA COLLISION CENTER
6951 S. Blackhawk St., BDG 1
Centennial, CO, 80112

PROJECT MANAGER GL

DRAWN BY: DPH

ISSUE / REVISION

SHEET TITLE

PLUMBING SPECIFICATIONS

SCALE: NTS

JOB NO. 2000.01

SHEET NUMBER

P0.00

PERMIT DOCUMENTS

COPYRIGHT 2021 MODULUS ARCHITECTS

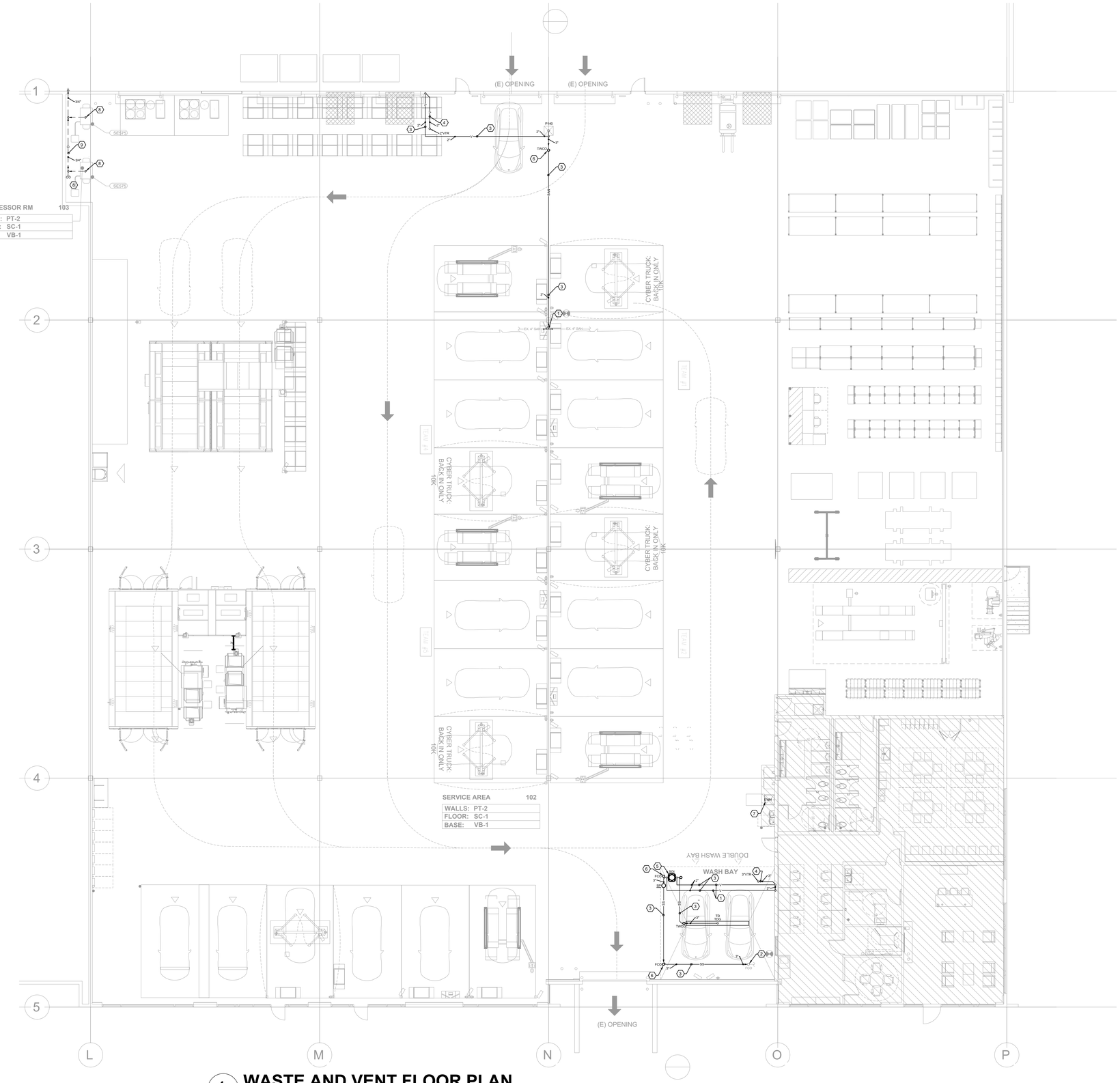

1 **WASTE AND VENT FLOOR PLAN**
SCALE: **3/32" = 1'-0"**

GENERAL NOTES:

A. ALL EXPOSED PIPING IN PUBLIC AREAS SHALL BE INSTALLED AS TIGHT AS POSSIBLE TO THE WARM SIDE OF THE EXPOSED STRUCTURE.
B. THE INSTALLATION OF THE PLUMBING SYSTEMS SHALL BE COORDINATED WITH ALL ELECTRICAL AND MECHANICAL EQUIPMENT, AND STRUCTURAL SLAB AND FRAMING.
C. REFER TO PLUMBING SHEET P1.2 FOR FIXTURE AND EQUIPMENT SCHEDULES INCLUDING SPECIFICATIONS AND ROUGH-IN SIZES.
D. REFER TO KITCHEN DRAWINGS FOR COMPLETE INSTALLATION AND SERVICE CONNECTIONS FOR ALL KITCHEN EQUIPMENT.
E. PLUMBING CONTRACTOR SHALL BE RESPONSIBLE FOR THE COMPLETE INSTALLATION OF ALL DRAIN LINES FROM KITCHEN EQUIPMENT. REFER TO KITCHEN DRAWINGS FOR PROPOSED SIZES, ALL INDIRECT DRAIN LINES SHALL BE INSTALLED WITH APPROVED AIR GAPS.
F. REFER TO ARCHITECTURAL DRAWINGS FOR DETAILS OF COUNTERTOPS, CASEWORK, AND OTHER FIXTURES, SHOWING EXACT LOCATIONS OF OPENINGS FOR PLUMBING ITEMS BEING INSTALLED. COORDINATE THE COMPLETE INSTALLATION WITH GENERAL CONTRACTOR.
G. THE PROPOSED ROUTING AND SIZES OF SODA SLEEVE LINES ARE SHOWN ON THE KITCHEN DRAWINGS. THE PLUMBING CONTRACTOR SHALL BE RESPONSIBLE FOR THEIR COMPLETE INSTALLATION AND COORDINATION WITH OTHER TRADES.
H. ALL WALL PIPING STUB-OUTS SHALL BE SECURELY TIED TO THE STRUCTURE WITH SUFFICIENT BACKING TO ELIMINATE MOVEMENT OF PIPE. FINAL CONNECTINOS TO KITCHEN SINKS SHALL BE HARD PIPED.
I. ALL OPENINGS IN DWV SYSTEMS RESULTING FROM INSTALLATION ROUGH-IN SHALL BE PROTECTED WITH A TEST PLUG THAT IS SECURELY LOCKED IN PLACE UNTIL FINAL FINISHED CONNECTIONS ARE COMPLETE.
J. PLUMBING CONTRACTOR TO ARRANGE AND PAY FOR ALL REQUIRED FEES, PERMITS, ENGINEERING FEES, AND MISCELLANEOUS COSTS ASSOCIATED WITH THE PLUMBING WORK PER LOCAL PLUMBING CODES.
K. ALL PENETRATIONS IN FIRE RATED WALL ASSEMBLIES SHALL BE SEALED WITH UL LISTED FIRE STOPPING MATERIAL.
L. THE EXISTING PIPING SHOWN ON THIS DRAWING HAS BEEN DERIVED FROM EXISTING DRAWINGS AND MAY NOT DEPICT EXISTING CONDITIONS.

NEW KEYED NOTES:

1. CONNECT NEW 3" SANITARY WASTE LINE TO EXISTING IN APPROXIMATE LOCATION. CONTRACTOR TO VERIFY POINT OF NEW CONNECTION BEFORE WORK BEGINS. THIS DRAWING HAS BEEN DERIVED FROM EXISTING DRAWINGS AND MAY NOT BE ACCURATE.
2. CONNECT NEW 3" SANITARY WASTE LINE TO EXISTING SANITARY. VERIFY POINT OF CONNECTION BEFORE WORK BEGINS. VERIFY INVERT ELEVATIONS BEFORE WORK BEGINS.
3. ROUTE PIPE BELOW SLAB WITH PROPER SLOPE.
4. ROUTE PIPE IN CEILING SPACE.
5. APPROXIMATE LOCATION OF SAND/OIL INTERCEPTOR, UNIT TO BE SET LEVEL AND IN ACCORDANCE WITH MANUFACTURERS RECOMMENDATION. CONFIRM EXISTING INVERT ELEVATIONS BEFORE WORK BEGINS.
6. INSTALL FLOOR CLEAN-OUT IN ACCORDANCE WITH DETAIL.
7. ROUTE FULL SIZE T&P RELIEF VALVE TO EXTERIOR OF BUILDING.
8. APPROXIMATE LOCATION OF DRAIN CONNECTION FOR COMPRESSOR, COORDINATE EXACT POINT OF CONNECTION BEFORE WORK BEGINS.
9. ROUTE DRAIN LINE TO EXTERIOR OF BUILDING.

TESLA

MODULUS
ARCHITECTS
AND LAND USE
PLANNING
8220 SAN PEDRO DR NE
SUITE 520
ALBUQUERQUE, NEW
MEXICO 87113
PHONE (505) 338-1499
FAX (505) 338-1498

ArSed Engineering Group, LLC
4700 Lincoln Road, NE | Suite 101 | Albuquerque, NM 87109 | 505.761.3100

COLORADO LICENSED
GABRIEL A. SEDILLO
54935
PROFESSIONAL ENGINEER
02/13/2024

PROJECT TITLE

TESLA COLLISION CENTER
6951 S. Blackhawk St., BDG 1
Centennial, CO, 80112

PROJECT MANAGER GL

DRAWN BY: DPH

ISSUE / REVISION

SHEET TITLE

PLUMBING WASTE AND VENT FLOOR PLAN

SCALE: 3/32"=1'-0"
JOB NO. 2000.01

SHEET NUMBER

P1.00

PERMIT DOCUMENTS

COPYRIGHT 2021 MODULUS ARCHITECTS

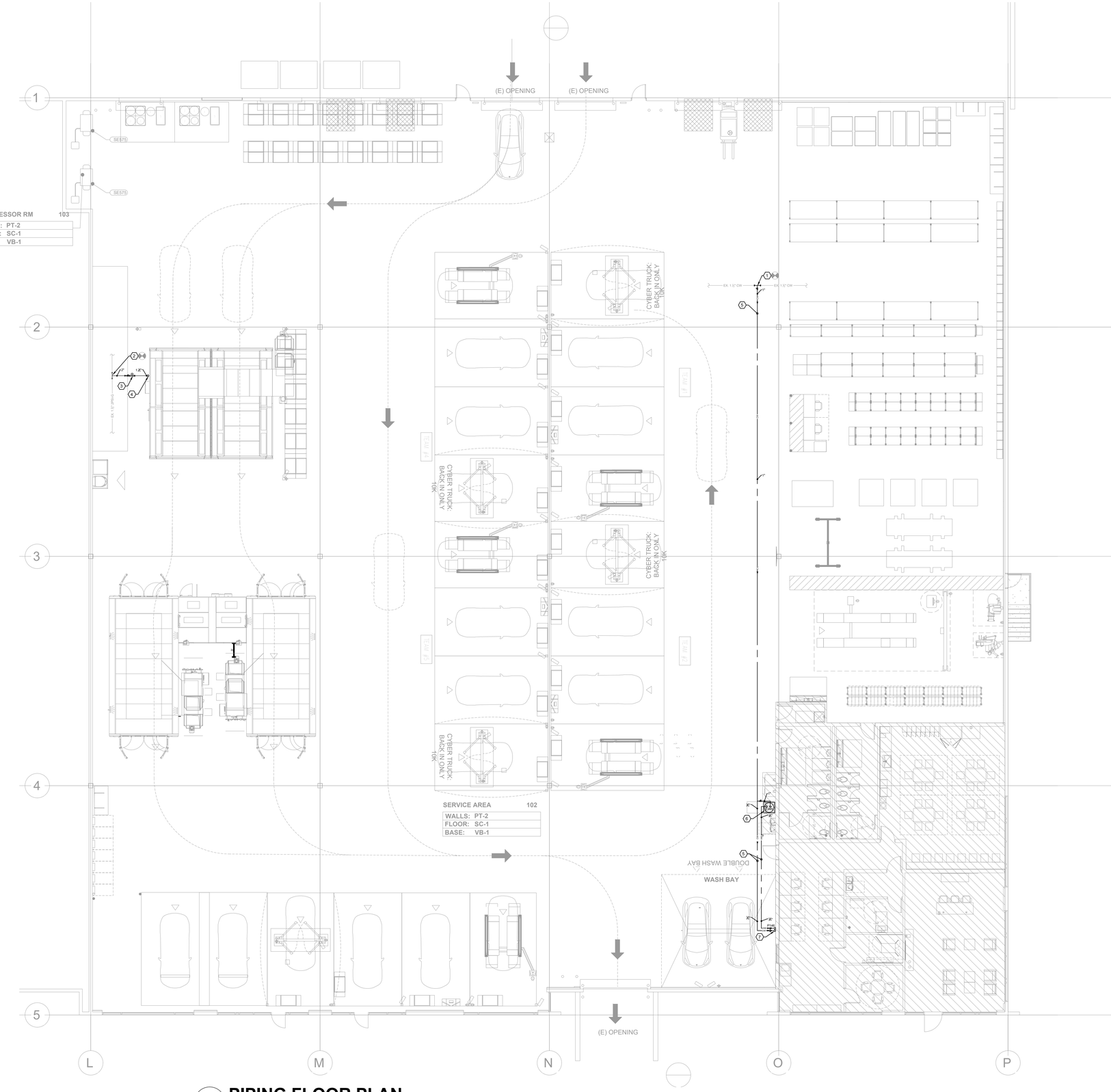

1 **PIPING FLOOR PLAN**
SCALE: **3/32" = 1'-0"**

GENERAL NOTES:

A. ALL EXPOSED PIPING IN PUBLIC AREAS SHALL BE INSTALLED AS TIGHT AS POSSIBLE TO THE WARM SIDE OF THE EXPOSED STRUCTURE.
B. THE INSTALLATION OF THE PLUMBING SYSTEMS SHALL BE COORDINATED WITH ALL ELECTRICAL AND MECHANICAL EQUIPMENT, AND STRUCTURAL SLAB AND FRAMING.
C. REFER TO PLUMBING SHEET P1.2 FOR FIXTURE AND EQUIPMENT SCHEDULES INCLUDING SPECIFICATIONS AND ROUGH-IN SIZES.
D. REFER TO KITCHEN DRAWINGS FOR COMPLETE INSTALLATION AND SERVICE CONNECTIONS FOR ALL KITCHEN EQUIPMENT.
E. PLUMBING CONTRACTOR SHALL BE RESPONSIBLE FOR THE COMPLETE INSTALLATION OF ALL DRAIN LINES FROM KITCHEN EQUIPMENT. REFER TO KITCHEN DRAWINGS FOR PROPOSED SIZES, ALL INDIRECT DRAIN LINES SHALL BE INSTALLED WITH APPROVED AIR GAPS.
F. REFER TO ARCHITECTURAL DRAWINGS FOR DETAILS OF COUNTERTOPS, CASEWORK, AND OTHER FIXTURES, SHOWING EXACT LOCATIONS OF OPENINGS FOR PLUMBING ITEMS BEING INSTALLED. COORDINATE THE COMPLETE INSTALLATION WITH GENERAL CONTRACTOR.
G. THE PROPOSED ROUTING AND SIZES OF SODA SLEEVE LINES ARE SHOWN ON THE KITCHEN DRAWINGS. THE PLUMBING CONTRACTOR SHALL BE RESPONSIBLE FOR THEIR COMPLETE INSTALLATION AND COORDINATION WITH OTHER TRADES.
H. ALL WALL PIPING STUB-OUTS SHALL BE SECURELY TIED TO THE STRUCTURE WITH SUFFICIENT BACKING TO ELIMINATE MOVEMENT OF PIPE. FINAL CONNECTINOS TO KITCHEN SINKS SHALL BE HARD PIPED.
I. ALL OPENINGS IN DWV SYSTEMS RESULTING FROM INSTALLATION ROUGH-IN SHALL BE PROTECTED WITH A TEST PLUG THAT IS SECURELY LOCKED IN PLACE UNTIL FINAL FINISHED CONNECTIONS ARE COMPLETE.
J. PLUMBING CONTRACTOR TO ARRANGE AND PAY FOR ALL REQUIRED FEES, PERMITS, ENGINEERING FEES, AND MISCELLANEOUS COSTS ASSOCIATED WITH THE PLUMBING WORK PER LOCAL PLUMBING CODES.
K. ALL PENETRATIONS IN FIRE RATED WALL ASSEMBLIES SHALL BE SEALED WITH UL LISTED FIRE STOPPING MATERIAL.
L. THE EXISTING PIPING SHOWN ON THIS DRAWING HAS BEEN DERIVED FROM EXISTING DRAWINGS AND MAY NOT DEPICT EXISTING CONDITIONS.

NEW KEYED NOTES:

1. CONNECT NEW 1" WATER LINE TO EXISTING WATER SERVICE IN APPROXIMATE LOCATION INDICATED. CONTRACTOR TO VERIFY POINT OF NEW CONNECTION BEFORE WORK BEGINS.

2. CONNECT NEW GAS LINE TO EXISTING IN APPROXIMATE LOCATION. VERIFY POINT OF NEW CONNECTION AND DELIVERY PRESSURE BEFORE WORK BEGINS.

3. APPROXIMATE LOCATION OF GAS REGULATOR LOCATED ON ROOF. REGULATOR SIZED FOR 2182cfh, 2 PSI INLET PRESSURE, 14"WC OUTLET PRESSURE. CONTRACTOR TO VERIFY EXISTING REGULATOR CAN ACCOMMODATE THE NEW LOAD OF 2182cfh, RE-SPRING/RE-ORIFICE AS NECESSARY. PROVIDE UNIONS, GAS REGULATOR, SHUT OFF VALVE AND DIRT LEG FOR A COMPLETE INSTALLATION.

4. 1½" GAS DROP TO PAINT BOOTH, COORDINATE ROUGH IN LOCATION WITH EQUIPMENT PROVIDER BEFORE WORK BEGINS. ROOF PENETRATION TO BE SEALED WATER TIGHT.

5. ROUTE PIPE IN CEILING SPACE.

6. APPROXIMATE LOCATION OF ELECTRIC WATER HEATER, UNIT TO BE SET LEVEL AND IN ACCORDANCE WITH MANUFACTURERS RECOMMENDATION. SEE DETAIL ON SHEET P4.00 FOR ADDITIONAL INSTALLATION INFORMATION.

7. DROP ¾" COLD AND HOT WATER DOWN TO ROUGH IN HEIGHT OF HOSE BIBB.

TESLA

MODULUS
ARCHITECTS
AND LAND USE
PLANNING
8220 SAN PEDRO DR NE
SUITE 520
ALBUQUERQUE, NEW
MEXICO 87113
PHONE (505) 338-1499
FAX (505) 338-1498

ArSed Engineering Group, LLC
4700 Lincoln Road, NE | Suite 101 | Albuquerque, NM 87109 | 505.761.3100

COLORADO LICENSED
GABRIEL A. LUNA
54935
PROFESSIONAL ENGINEER
02/13/2024

PROJECT TITLE

TESLA COLLISION CENTER
6951 S. Blackhawk St., BDG 1
Centennial, CO, 80112

PROJECT MANAGER GL

DRAWN BY: DPH

ISSUE / REVISION

SHEET TITLE

PLUMBING PIPING FLOOR PLAN

SCALE: 3/32"=1'-0"
JOB NO. 2000.01

SHEET NUMBER

P1.20

PERMIT DOCUMENTS

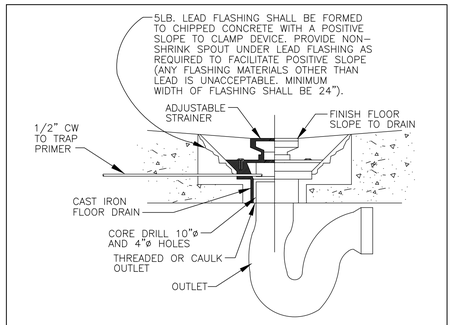

NOTE: THE GENERAL CONTRACTOR SHALL PROVIDE A ONE PIECE WATER PROOF MEMBRANE FLOOR AND BASE IN THE TOILET ROOM(S).

FLOOR DRAIN DETAIL | SCALE: NONE | 1

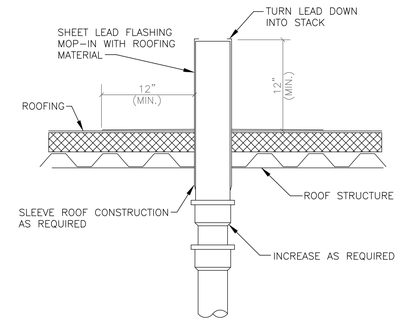

VENT THRU ROOF DETAIL | SCALE: NONE | 2

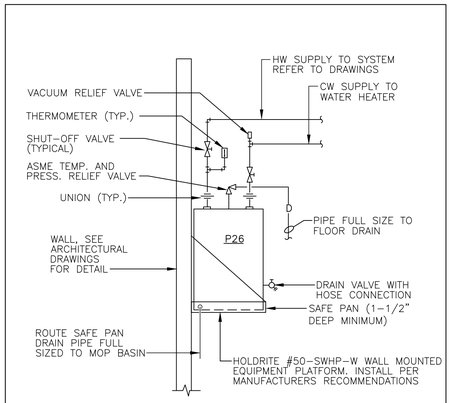

TANK TYPE WATER HEATER DETAIL | SCALE: NONE | 3

SPECIFICATIONS
1. 4" Plain End Inlet/outlet, 3" Plain End vents.
2. Max flow rate 100 GPM
3. Capacities Liquid 100 gal. (14.7 cu. ft.), Oil 93 gal.; Sand 11 gal.
4. Unit weight with composite covers 130 lbs.; with cast iron covers 188 lbs.
5. Maximum operating temperature 140 °F continuous.
6. Highway rated covers: 16,000 lb. capacity.

NOTES
1. Snap-in flow control tubes with until.
2. Seamless medium density polyethylene tank.
3. Unit supplied with built-in adaptor for up to 5' of burial depth. Additional risers(s) available for deeper burial depth.
4. Cover placement allows full access to tank for proper maintenance.
5. Narrow footprint allows clearance through doorways and down stairs.
6. Engineered inlet and outlet diffusers are removable to inspect/clean piping.
7. For on the-floor or buried applications.

DIFFUSION FLOW TECHNOLOGY
The inlet diffuser splits influent into three paths, creating laminar flow and utilizing the entire liquid volume of the tank for efficient oil separation. The calibrated openings greatly reduce influent turbulence. The influent enters the main chamber without disturbing the existing oil or sand layers. The bottom of the outlet diffuser allows only effluent that is free of oil to exit the tank.

ENGINEER SPECIFICATION GUIDE
Striem (R Reserve)OR/sand separator model DS-75 shall be lifetime guaranteed and made in USA of seamless, rotationally-molded polyethylene. Separator shall be furnished for above or below grade installation, with field adjustable riser system, snap-in flow control and (2) vent connections. Separator flow rate shall be 75 GPM. Separator oil capacity shall be 93 gallons. Sand capacity shall be 11 gallons. Covers shall provide water/gas-tight seal and have a maximum 16,000 lbs load capacity.

THIRD PARTY STRUCTURAL ANALYSIS
The DS-75 has been structurally analyzed in accordance with the requirements of IBC 2012 and ASCE/SEI 7 for direct burial. The maximum burial depth and backfill material are specified in our installation instructions. The structural design has been reviewed and sealed by a professional engineer registered in the state of California. A sealed structural analysis report is available upon request.

OPTIONS
- ☐ 4N - 4" Male Thread Inlet / Outlet
- ☐ 6P - 6" Plain End SCH40 Inlet / Outlet
- ☐ 6N - 6" Male Thread Inlet / Outlet
- ☐ CI24-HP - H20 Rated Pickable Cast Iron Cover
- ☐ CC24 - Integral Membrane Clamping Collar Kit
- ☐ CS2 - Oleon Sweep Coalescing Media (single)*
- ☐ HDK-2 - High Water Anchor Kit

*Oleon Sweep Coalescing Media not compatible with CPRK

RISER OPTIONS
- ☐ SR24 - 30"-24"
- ☐ LR24 - 32"-39"
- ☐ SR24 (2) - 33"-42"
- ☐ SR24 + LR24 - 43"-58"
- ☐ LR24 (2) - 59"-72"
- ☐ CPRK (2) 1 32" - 72"
  - Corrugated Pipe Riser Kit.
  - 18" diameter corrugated pipe by others.
  - Used in substitute of SR/LR riser options
  - See CPRK specification for more detail.

PROPRIETARY AND CONFIDENTIAL
THE INFORMATION CONTAINED IN THIS DRAWING IS THE SOLE PROPERTY OF STRIEM LLC. ANY REPRODUCTION IN PART OR AS A WHOLE WITHOUT THE WRITTEN PERMISSION OF STRIEM LLC IS PROHIBITED.
COPYRIGHT STRIEM LLC. 2

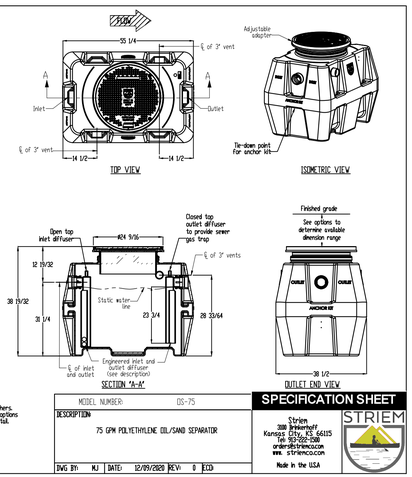

MODEL NUMBER:	DS-75
DESCRIPTION:	75 GPM POLYETHYLENE OIL/SAND SEPARATOR
DWG BY: MJ	DATE: 12/09/2020 REV: 0 ECO:

SPECIFICATION SHEET

STRIEM

Striem
300 Brewerhof
Kansas City, KS 66115
913 621-5500
orders@striemco.com
www. striemco.com

Made in the USA

SAND OIL SEPERATOR DETAIL | SCALE: NONE | 5

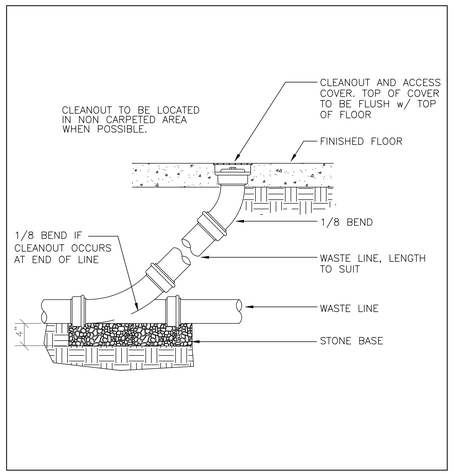

FLOOR CLEANOUT DETAIL | SCALE: NONE | 5

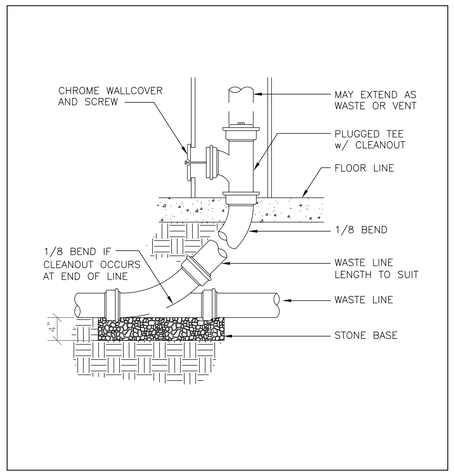

WALL CLEANOUT DETAIL | SCALE: NONE | 6

COPYRIGHT 2021 MODULUS ARCHITECTS

Tesla Collision Center, Centennial, CO

MODULUS ARCHITECTS AND LAND USE PLANNING
8220 SAN PEDRO DR NE
SUITE 520
ALBUQUERQUE, NEW MEXICO 87113
PHONE (505) 338-1499
FAX (505) 338-1498

ArSed Engineering Group, LLC
4700 Lincoln Road, NE I Suite 101 I Albuquerque, NM 87109 I 505.761.3100

COLORADO LICENSED
GABRIEL A. SEDNE
54935
PROFESSIONAL ENGINEER
02/13/2024

PROJECT TITLE

TESLA COLLISION CENTER
6951 S. Blackhawk St., BDG 1
Centennial, CO, 80112

PROJECT MANAGER GL

DRAWN BY: DPH

ISSUE / REVISION

PERMIT DOCUMENTS

SHEET TITLE

PLUMBING DETAILS

SCALE: NTS

JOB NO. 2000.01

SHEET NUMBER

P4.00